NC

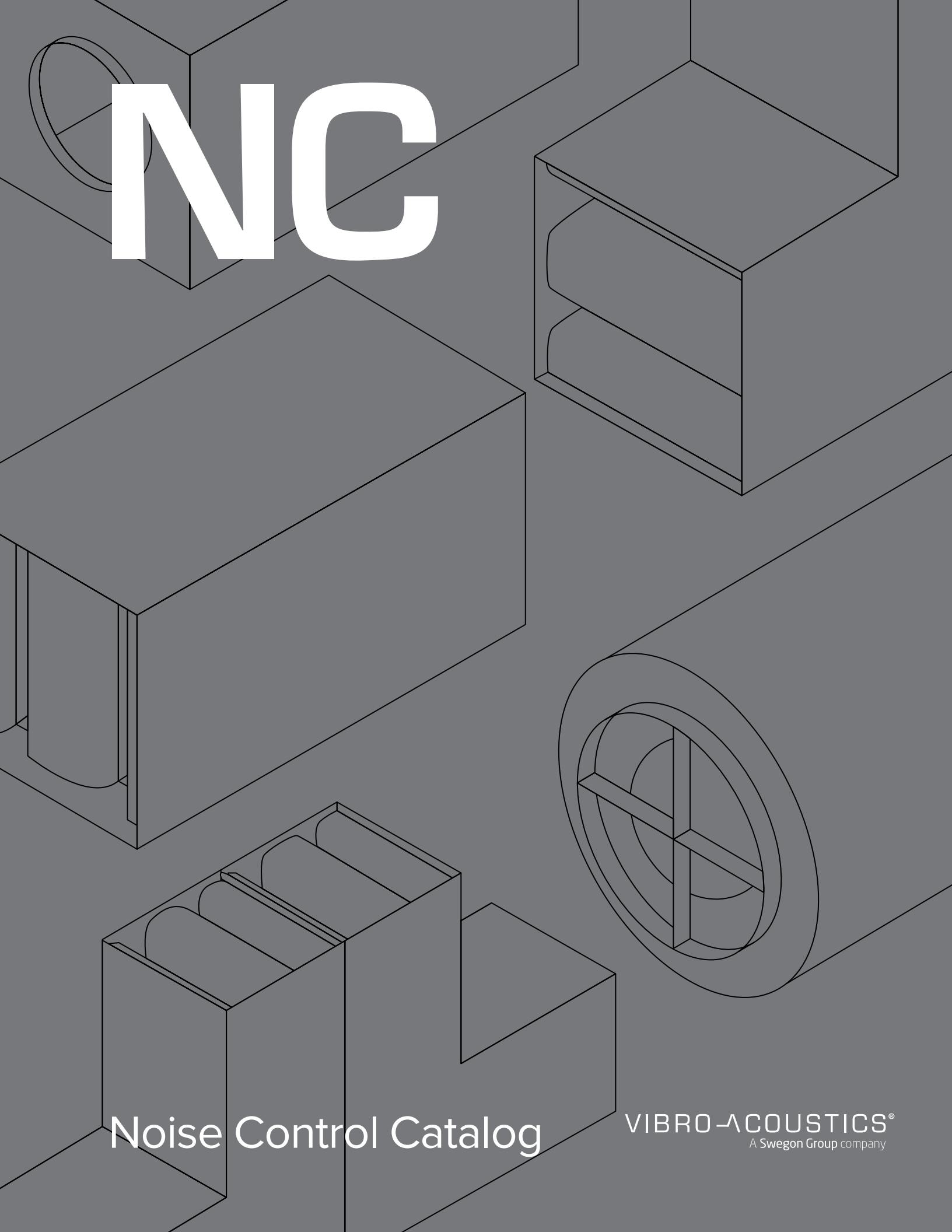

Noise Control Catalog

VIBRO-ACOUSTICS®
A Swegon Group company

CONTENTS

HVAC Silencers
Dissipative
Reactive
Film-Lined
MoldBlock
Other
Special Construction Options
Duct Silencer Installation Guidelines
Silencer Selection Instructions
Rectangular Silencer
  Cross Section Dimensions
HVAC Silencer Spec

Industrial Silencers
Axial
Centrifugal
Stack
Industrial Silencer Spec

Curbs
Noise Control Curb Solution (NCC-VCR)
Isolated Curbs (VCR)
Standard Curbs (RC)

Plenums, Enclosures and Barriers
Plenums
Enclosures
Barriers
Panels

Floating Floors
Form Work
Jack-Up
Operation and Maintenance
Warranty

Acoustic Louvers
Airfoil Blade
Flat Blade
V Blade
Acoustic Louver Spec

HVAC SILENCERS

HVAC SILENCERS DISSIPATIVE

RD

Rectangular
Dissipative
Straight Silencers

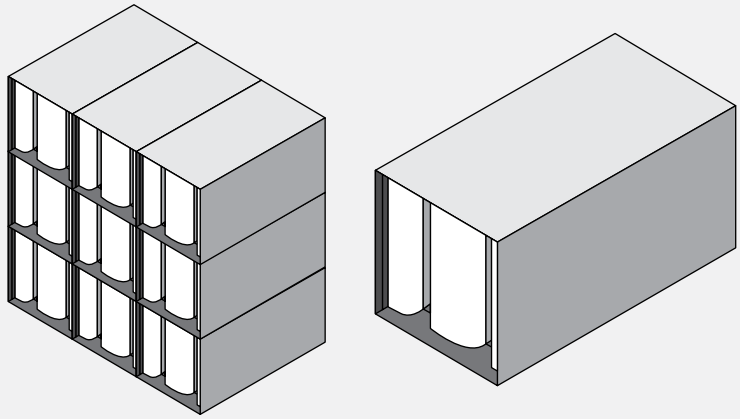

Description

VIBRO-ACOUSTICS' RD SILENCERS use acoustic grade glass fiber as the principal sound-absorbing mechanism. Rectangular models utilize acoustical splitters, sometimes called baffles, for broad-band attenuation. Perforated metal protects the glass fiber from erosion by the airflow.

Splitters in rectangular models vary in quantity and thickness, and air passages also vary in size. The splitters are aerodynamically shaped to minimize pressure drop.

Model Names

Vibro-Acoustics' silencer model names are coded to help identify their recommended application range.

*The lower the Frequency Indicator, the better the silencer's insertion loss in the low frequency range. The higher the Frequency Indicator, the better the silencer's insertion loss in the mid to high frequency ranges.

Rectangular RD - ____ - ____

Silencer Type

Velocity Range
ULV, LV, MV, HV, UHV

Frequency Indicator*
F1, F2, F3, F4, F5, F6, F7, F8, F9

Applications

> In supply, return and exhaust ductwork
> In fan plenums and air handling units (both supply and return)
> On cooling towers, air-cooled chillers, etc.
> On the receiver side of valves, dampers, terminal boxes, etc.
> Economical substitution for acoustically lined duct
> Normal recommended duct velocity range

RD-ULV	0-500 fpm	RD-HV	1250-2000 fpm
RD-LV	0-750 fpm	RD-UHV	2000-2500 fpm
RD-MV	750-1250 fpm		

For velocities in excess of the RD-HV range see the EX Model and RLP Silencers.

Features and Benefits

> Available in any cross-sectional dimensions to "fit-the-duct"

> Modular unit sizes to fit ducts and air handling units without using transitions or large blank-off sections

> Standard rectangular silencer lengths available in 36, 60, 84 and 108"; custom lengths up to 144" at no cost premium

> Can be selected to suit the acoustic, space, or energy-cost requirements

> Construction quality and aerodynamic design optimized to give reliable performance, best acoustics, lowest pressure drop and lowest overall cost

> Splitters can be aligned vertically or horizontally to minimize extra pressure losses due to poor inlet or discharge flow conditions (e.g. near fans, elbows, etc.)

> When break-out noise is of prime concern RD silencers may be appropriate selections. They may require mass/stiffness added to their outer casing. Refer to Silencer Selection Instructions for proper silencer location.

Cautions/When Not to Use RD Silencers

> When 3-5 equivalent duct diameters of straight, unobstructed duct are not available on both the silencer's inlet or discharge; consider using Elbow Silencers, Transitional Silencers or Fan Silencers

> When velocities exceed 2000 fpm for RD silencers; consider RLP Silencers or EX Silencers

> When acoustical media in the airstream is of concern; consider Film Lined Silencers and No-Media Silencers

Performance Data/Testing

See Performance Data section.
Vibro-Acoustics' 5th generation aero-acoustic laboratory was the first laboratory to be NVLAP accredited (Lab Code 100424-0) for the ASTM E-477 silencer test code. NVLAP is administered by the U.S. Dept. of Commerce.

Silencer Selection and Location

Vibro-Acoustics offers multiple selection methods, from our complete analysis service to Do-It-Yourself quick selections. Refer to Silencer Selection Instructions for details.

Standard Construction Features

> Galvanized, lockformed casing constructed to SMACNA standards

> 1" slip connection at each end

> Aerodynamically shaped, galvanized nose at inlet

> Galvanized gap plates between splitters to ensure close dimensional tolerances at air passages

> Perforated galvanized splitters complete with perforated diffuser tail sections

> Splitters filled with acoustic grade glass fiber under minimum 15% compression

Special Construction Options

> Heavier gauge casings and perforated metal

> Continuously welded casings

> Special materials (e.g. stainless steel, aluminum)

> Flanges

> Access doors

> Media protection: glass fiber cloth, film liner

> High transmission loss (HTL) casings to prevent break-out/break-in noise

> Built in transitions

> Removable splitters

> Flow measuring stations

> For details of above and more special options see Special Construction Options.

CERTIFIED PERFORMANCE DATA

VIBRO-ACOUSTICS®
A Swegon Group company

RD-ULV-F1

Rectangular Dissipative
Ultra low velocity silencer
(<500 fpm)

How to Specify Example:

32 X **21** **RD-ULV-F1** X **60**

Duct Width	Duct Height	Silencer Model	Silencer Length

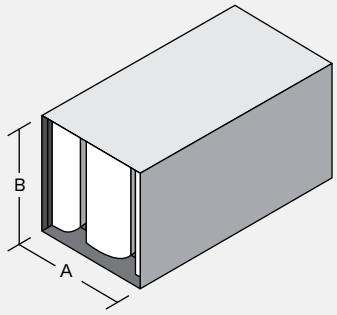

Insertion Loss (IL)

+ : "forward flow" where noise & airflow move in same direction (e.g. supply side)

- : "reverse flow" where noise & airflow move in opposite directions (e.g. return side)

See Silencer Selection Instructions. DIL above 50dB may be limited due to noise flanking around the silencer or along the duct walls. If more than 50dB DIL is required, contact your local Vibro-Acoustics representative or call **1-800-565-8401**.

Length (in.)	Face Velocity (ft. per min)	Octave Band - Hz/Dynamic Insertion Loss (dB)							
		63	125	250	500	1000	2000	4000	8000
36	- 500	7	16	20	19	26	20	17	14
	0	8	15	20	18	25	22	18	15
	+ 500	7	14	19	18	25	23	18	16
60	- 500	10	19	29	30	38	29	21	17
	0	10	18	29	29	38	30	24	19
	+ 500	9	18	28	28	38	30	24	20
84	- 500	13	22	39	41	51	38	26	19
	0	12	21	38	39	50	38	29	23
	+ 500	11	21	37	38	50	38	30	24
108	- 500	16	25	48	46	55	47	30	21
	0	14	24	47	46	55	45	35	27
	+ 500	13	24	46	46	55	46	36	28

Pressure Drop (PD)

Pressure drops are reported in accordance with ASTM E477 methods and are based upon **ideal** flow conditions (5 diameters of straight duct on silencer inlet and 10 on outlet). Less than ideal conditions will result in an increase in pressure drop due to System Effects. See Silencer System Effects Data.

Length (in.)	Face Velocity (ft. per min) / Pressure Drop (in.w.g.)						
	250	500	750	1000	1250	1500	1750
36	0.03	0.12	0.26	0.46	0.72	1.04	1.41
60	0.04	0.16	0.35	0.63	0.98	1.41	1.92
84	0.05	0.20	0.45	0.80	1.24	1.79	2.43
108	0.06	0.24	0.54	0.96	1.50	2.17	2.95

☐ Acceptable (0 - 0.35") ☐ Caution (>0.35") Pressure Drop may be too high for certain applications

Generated Noise (GN)

@ 5 sq.ft. face area

Length (in.)	Face Velocity (ft. per min)	Octave Band - Hz/Generated Noise (dB re 10^{-12} watts)							
		63	125	250	500	1K	2K	4K	8K
All	- 750	55	42	38	41	47	49	40	32
	- 500	52	41	34	38	41	39	28	30
	+ 500	55	39	31	29	33	31	25	30
	+ 750	54	45	38	35	39	41	35	30

GN correction chart at right must be used to correct GN to other face areas. →

Face Area (sq.ft.)	2.5	5	10	20	40	80
dB	-3	0	+3	+6	+9	+12

Cross Section Sizes*

"A" dimension (in.)
15-16
29-32
58-64
87-96
116-128
145-160
174-192
203-224
232-240

"B" dimension
ANY SIZE

Approx. weight
6.7 lbs/cu.ft.

See Rectangular Silencer Cross-Section Dimensions to ensure selection matches ductwork dimensions.

CERTIFIED PERFORMANCE DATA

VIBRO-ACOUSTICS®
A Swegon Group company

RD-ULV-F2

Rectangular Dissipative
Ultra low velocity silencer
(<500 fpm)

How to Specify Example:

27 X **22** **RD-ULV-F2** X **60**

Duct Width | Duct Height | Silencer Model | Silencer Length

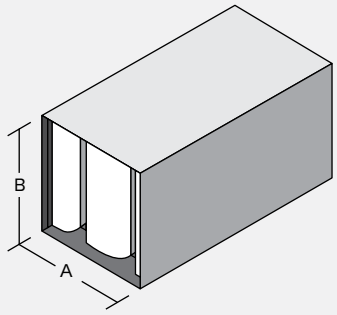

Insertion Loss (IL)

+ : "forward flow" where noise & airflow move in same direction (e.g. supply side)

- : "reverse flow" where noise & airflow move in opposite directions (e.g. return side)

See Silencer Selection Instructions. DIL above 50dB may be limited due to noise flanking around the silencer or along the duct walls. If more than 50dB DIL is required, contact your local Vibro-Acoustics representative or call **1-800-565-8401**.

Length (in.)	Face Velocity (ft. per min)	Octave Band - Hz/Dynamic Insertion Loss (dB)							
		63	125	250	500	1000	2000	4000	8000
36	- 500	7	14	20	20	27	21	16	13
	0	8	14	20	20	27	23	17	14
	+ 500	7	13	19	19	26	23	18	15
60	- 500	10	18	29	33	42	31	21	16
	0	10	17	28	32	41	32	23	18
	+ 500	9	16	27	31	41	33	24	19
84	- 500	13	22	38	43	53	41	26	18
	0	12	21	37	42	53	42	30	22
	+ 500	12	21	36	41	53	43	31	23
108	- 500	16	25	47	46	55	50	31	20
	0	14	23	45	46	55	51	35	25
	+ 500	13	24	44	46	55	51	37	27

Pressure Drop (PD)

Pressure drops are reported in accordance with ASTM E477 methods and are based upon **ideal** flow conditions (5 diameters of straight duct on silencer inlet and 10 on outlet). Less than ideal conditions will result in an increase in pressure drop due to System Effects. See Silencer System Effects Data.

Length (in.)	Face Velocity (ft. per min) / Pressure Drop (in.w.g.)						
	250	500	750	1000	1250	1500	1750
36	0.03	0.11	0.26	0.45	0.71	1.02	1.39
60	0.04	0.15	0.34	0.61	0.95	1.37	1.86
84	0.05	0.20	0.44	0.78	1.22	1.76	2.39
108	0.06	0.22	0.50	0.90	1.40	2.01	2.74

☐ Acceptable (0 - 0.35") ☐ Caution (>0.35") Pressure Drop may be too high for certain applications

Generated Noise (GN)

@ 5 sq.ft. face area

Length (in.)	Face Velocity (ft. per min)	Octave Band - Hz/Generated Noise (dB re 10^{-12} watts)							
		63	125	250	500	1K	2K	4K	8K
All	- 750	54	43	40	42	47	50	40	31
	- 500	52	41	36	39	43	40	29	29
	+ 500	54	39	32	30	33	32	25	29
	+ 750	54	46	39	36	40	41	35	30

GN correction chart at right must be used to correct GN to other face areas. →

Face Area (sq.ft.)	2.5	5	10	20	40	80
dB	-3	0	+3	+6	+9	+12

Cross Section Sizes*
"A" dimension (in.)
14
27-28
54-57
81-86
108-115
135-144
162-173
189-202
216-231
"B" dimension
ANY SIZE
Approx. weight
6.7 lbs/cu.ft.
See Rectangular Silencer Cross-Section Dimensions to ensure selection matches ductwork dimensions.

CERTIFIED PERFORMANCE DATA

VIBRO-ACOUSTICS®
A Swegon Group company

RD-ULV-F3

Rectangular Dissipative
Ultra low velocity silencer
(<500 fpm)

How to Specify Example:

25 X **21** **RD-ULV-F3** X **60**

Duct Width | Duct Height | Silencer Model | Silencer Length

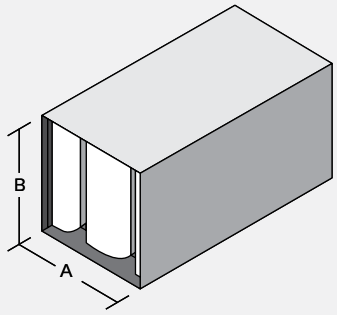

Insertion Loss (IL)

+ : "forward flow" where noise & airflow move in same direction (e.g. supply side)

- : "reverse flow" where noise & airflow move in opposite directions (e.g. return side)

See Silencer Selection Instructions. DIL above 50dB may be limited due to noise flanking around the silencer or along the duct walls. If more than 50dB DIL is required, contact your local Vibro-Acoustics representative or call **1-800-565-8401**.

Length (in.)	Face Velocity (ft. per min)	Octave Band - Hz/Dynamic Insertion Loss (dB)							
		63	125	250	500	1000	2000	4000	8000
36	- 500	8	13	20	22	28	22	15	12
	0	8	13	19	22	28	23	16	13
	+ 500	7	13	18	21	27	24	17	14
60	- 500	10	17	28	37	45	33	21	15
	0	10	16	28	36	44	35	23	17
	+ 500	9	15	27	35	44	36	24	18
84	- 500	14	22	37	46	55	44	26	16
	0	13	21	36	44	55	47	30	21
	+ 500	12	20	35	44	55	48	31	22
108	- 500	15	25	45	46	55	54	32	19
	0	14	23	44	46	55	55	36	24
	+ 500	13	23	43	46	55	55	37	26

Pressure Drop (PD)

Pressure drops are reported in accordance with ASTM E477 methods and are based upon **ideal** flow conditions (5 diameters of straight duct on silencer inlet and 10 on outlet). Less than ideal conditions will result in an increase in pressure drop due to System Effects. See Silencer System Effects Data.

Length (in.)	Face Velocity (ft. per min) / Pressure Drop (in.w.g.)						
	250	500	750	1000	1250	1500	1750
36	0.03	0.11	0.25	0.45	0.70	1.01	1.37
60	0.04	0.15	0.33	0.59	0.92	1.33	1.80
84	0.05	0.19	0.43	0.77	1.20	1.72	2.34
108	0.05	0.21	0.47	0.83	1.29	1.86	2.53

☐ Acceptable (0 - 0.35") ☐ Caution (>0.35") Pressure Drop may be too high for certain applications

Generated Noise (GN)

@ 5 sq.ft. face area

Length (in.)	Face Velocity (ft. per min)	Octave Band - Hz/Generated Noise (dB re 10^{-12} watts)							
		63	125	250	500	1K	2K	4K	8K
All	- 750	53	45	42	44	48	50	40	31
	- 500	51	42	38	41	44	41	29	29
	+ 500	52	40	33	30	33	32	24	28
	+ 750	53	47	40	36	40	42	36	29

GN correction chart at right must be used to correct GN to other face areas. →

Face Area (sq.ft.)	2.5	5	10	20	40	80
dB	-3	0	+3	+6	+9	+12

Cross Section Sizes*

"A" dimension (in.)
13
25-26
50-53
75-80
100-107
125-134
150-161
175-188
200-215
225-240

"B" dimension
ANY SIZE

Approx. weight
6.8 lbs/cu.ft.

See Rectangular Silencer Cross-Section Dimensions to ensure selection matches ductwork dimensions.

CERTIFIED PERFORMANCE DATA

VIBRO-ACOUSTICS®
A Swegon Group company

RD-ULV-F4

Rectangular Dissipative
Ultra low velocity silencer
(<500 fpm)

How to Specify Example:

47 X **22** **RD-ULV-F4** X **60**

Duct Width	Duct Height	Silencer Model	Silencer Length

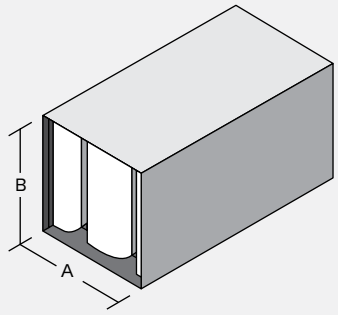

Insertion Loss (IL)

+ : "forward flow" where noise & airflow move in same direction (e.g. supply side)

- : "reverse flow" where noise & airflow move in opposite directions (e.g. return side)

See Silencer Selection Instructions. DIL above 50dB may be limited due to noise flanking around the silencer or along the duct walls. If more than 50dB DIL is required, contact your local Vibro-Acoustics representative or call **1-800-565-8401**.

Length (in.)	Face Velocity (ft. per min)	Octave Band - Hz/Dynamic Insertion Loss (dB)							
		63	125	250	500	1000	2000	4000	8000
36	- 500	8	12	20	24	29	23	14	11
	0	8	12	19	23	29	23	15	12
	+ 500	8	12	18	22	29	24	16	13
60	- 500	10	16	28	40	48	35	20	15
	0	9	14	27	39	47	38	23	15
	+ 500	9	14	26	38	47	38	24	17
84	- 500	14	21	36	46	55	47	26	15
	0	13	20	35	46	55	52	30	20
	+ 500	12	20	34	46	55	53	32	21
108	- 500	15	25	44	46	55	55	33	19
	0	14	22	43	46	55	55	36	22
	+ 500	13	22	41	46	55	55	38	24

Pressure Drop (PD)

Pressure drops are reported in accordance with ASTM E477 methods and are based upon **ideal** flow conditions (5 diameters of straight duct on silencer inlet and 10 on outlet). Less than ideal conditions will result in an increase in pressure drop due to System Effects. See Silencer System Effects Data.

Length (in.)	Face Velocity (ft. per min) / Pressure Drop (in.w.g.)						
	250	500	750	1000	1250	1500	1750
36	0.03	0.11	0.25	0.44	0.69	0.99	1.35
60	0.04	0.14	0.32	0.57	0.89	1.28	1.75
84	0.05	0.19	0.42	0.75	1.17	1.69	2.30
108	0.05	0.19	0.43	0.76	1.19	1.71	2.33

☐ Acceptable (0 - 0.35") ☐ Caution (>0.35") Pressure Drop may be too high for certain applications

Generated Noise (GN)

@ 5 sq.ft. face area

Length (in.)	Face Velocity (ft. per min)	Octave Band - Hz/Generated Noise (dB re 10^{-12} watts)							
		63	125	250	500	1K	2K	4K	8K
All	- 750	52	46	44	46	49	51	41	30
	- 500	51	42	40	42	45	43	29	28
	+ 500	51	40	34	31	34	33	24	27
	+ 750	53	47	41	37	40	43	36	29

GN correction chart at right must be used to correct GN to other face areas. →

Face Area (sq.ft.)	2.5	5	10	20	40	80
dB	-3	0	+3	+6	+9	+12

Cross Section Sizes*

"A" dimension (in.)
12
23-24
46-49
69-74
92-99
115-124
138-149
161-174
184-199
207-224
230-240

"B" dimension
ANY SIZE

Approx. weight
6.9 lbs/cu.ft.

See Rectangular Silencer Cross-Section Dimensions to ensure selection matches ductwork dimensions.

CERTIFIED PERFORMANCE DATA

VIBRO-ACOUSTICS®
A Swegon Group company

RD-ULV-F5

Rectangular Dissipative
Ultra low velocity silencer
(<500 fpm)

How to Specify Example:

44 X **22** **RD-ULV-F5** X **60**

Duct Width | Duct Height | Silencer Model | Silencer Length

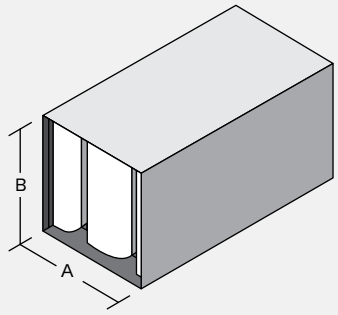

Insertion Loss (IL)

+ : "forward flow" where noise & airflow move in same direction (e.g. supply side)

- : "reverse flow" where noise & airflow move in opposite directions (e.g. return side)

See Silencer Selection Instructions. DIL above 50dB may be limited due to noise flanking around the silencer or along the duct walls. If more than 50dB DIL is required, contact your local Vibro-Acoustics representative or call **1-800-565-8401**.

Length (in.)	Face Velocity (ft. per min)	Octave Band - Hz/Dynamic Insertion Loss (dB)							
		63	125	250	500	1000	2000	4000	8000
36	- 500	7	12	19	24	32	25	16	12
	0	8	12	18	23	32	26	17	13
	+ 500	7	11	17	23	31	26	18	13
60	- 500	10	16	27	40	49	39	23	17
	0	9	14	26	39	48	42	26	17
	+ 500	8	14	25	37	48	42	27	19
84	- 500	13	22	35	46	55	50	30	18
	0	12	21	34	46	55	54	34	22
	+ 500	12	20	33	46	55	55	36	23
108	- 500	15	26	43	46	55	55	37	22
	0	14	23	42	46	55	55	40	25
	+ 500	13	23	40	46	55	55	42	27

Pressure Drop (PD)

Pressure drops are reported in accordance with ASTM E477 methods and are based upon **ideal** flow conditions (5 diameters of straight duct on silencer inlet and 10 on outlet). Less than ideal conditions will result in an increase in pressure drop due to System Effects. See Silencer System Effects Data.

Length (in.)	Face Velocity (ft. per min) / Pressure Drop (in.w.g.)						
	250	500	750	1000	1250	1500	1750
36	0.03	0.12	0.26	0.47	0.73	1.06	1.44
60	0.04	0.15	0.34	0.60	0.94	1.36	1.85
84	0.05	0.19	0.44	0.78	1.22	1.75	2.38
108	0.05	0.20	0.46	0.82	1.27	1.83	2.50

☐ Acceptable (0 - 0.35") ☐ Caution (>0.35") Pressure Drop may be too high for certain applications

Generated Noise (GN)

@ 5 sq.ft. face area

Length (in.)	Face Velocity (ft. per min)	Octave Band - Hz/Generated Noise (dB re 10^{-12} watts)							
		63	125	250	500	1K	2K	4K	8K
All	- 750	52	46	44	46	49	51	41	31
	- 500	51	42	40	42	45	43	29	28
	+ 500	51	40	34	31	34	32	24	27
	+ 750	53	48	41	38	40	43	36	29

GN correction chart at right must be used to correct GN to other face areas. →

Face Area (sq.ft.)	2.5	5	10	20	40	80
dB	-3	0	+3	+6	+9	+12

Cross Section Sizes*
"A" dimension (in.)
11
21-22
42-45
63-68
84-91
105-114
126-137
147-160
168-183
189-206
210-229
231-240
"B" dimension
ANY SIZE
Approx. weight
6.7 lbs/cu.ft.
See Rectangular Silencer Cross-Section Dimensions to ensure selection matches ductwork dimensions.

CERTIFIED PERFORMANCE DATA

VIBRO-ACOUSTICS®
A Swegon Group company

RD-ULV-F6

Rectangular Dissipative
Ultra low velocity silencer
(<500 fpm)

How to Specify Example:

40 X **21** **RD-ULV-F6** X **60**

Duct Width | Duct Height | Silencer Model | Silencer Length

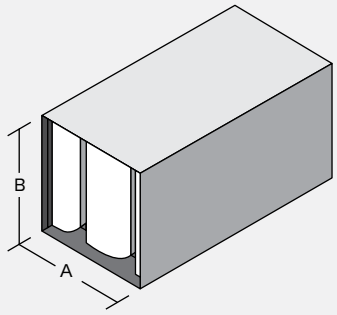

Insertion Loss (IL)

+ : "forward flow" where noise & airflow move in same direction (e.g. supply side)

- : "reverse flow" where noise & airflow move in opposite directions (e.g. return side)

See Silencer Selection Instructions. DIL above 50dB may be limited due to noise flanking around the silencer or along the duct walls. If more than 50dB DIL is required, contact your local Vibro-Acoustics representative or call **1-800-565-8401**.

Length (in.)	Face Velocity (ft. per min)	Octave Band - Hz/Dynamic Insertion Loss (dB)							
		63	125	250	500	1000	2000	4000	8000
36	- 500	7	12	18	24	35	28	17	12
	0	7	11	17	23	34	28	19	14
	+ 500	6	10	16	23	34	29	19	14
60	- 500	10	16	26	39	50	44	27	18
	0	9	14	25	38	49	45	30	20
	+ 500	8	14	24	37	49	46	31	21
84	- 500	13	22	34	46	55	52	34	21
	0	11	21	33	46	55	55	38	25
	+ 500	11	20	32	46	55	55	39	26
108	- 500	14	27	42	46	55	55	42	25
	0	13	24	41	46	55	55	44	28
	+ 500	12	24	39	46	55	55	46	30

Pressure Drop (PD)

Pressure drops are reported in accordance with ASTM E477 methods and are based upon **ideal** flow conditions (5 diameters of straight duct on silencer inlet and 10 on outlet). Less than ideal conditions will result in an increase in pressure drop due to System Effects. See Silencer System Effects Data.

Length (in.)	Face Velocity (ft. per min) / Pressure Drop (in.w.g.)						
	250	500	750	1000	1250	1500	1750
36	0.03	0.13	0.28	0.50	0.78	1.13	1.53
60	0.04	0.16	0.36	0.64	0.99	1.43	1.95
84	0.05	0.20	0.45	0.81	1.26	1.82	2.47
108	0.05	0.22	0.49	0.87	1.36	1.96	2.66

☐ Acceptable (0 - 0.35") ☐ Caution (>0.35") Pressure Drop may be too high for certain applications

Generated Noise (GN)

@ 5 sq.ft. face area

Length (in.)	Face Velocity (ft. per min)	Octave Band - Hz/Generated Noise (dB re 10^{-12} watts)							
		63	125	250	500	1K	2K	4K	8K
All	- 750	52	46	44	46	50	52	42	31
	- 500	51	42	40	42	45	43	29	28
	+ 500	51	40	34	31	34	32	23	27
	+ 750	54	48	42	38	41	43	36	29

GN correction chart at right must be used to correct GN to other face areas. →

Face Area (sq.ft.)	2.5	5	10	20	40	80
dB	-3	0	+3	+6	+9	+12

Cross Section Sizes*

"A" dimension (in.)
10
19-20
38-41
57-62
76-83
95-104
114-125
133-146
152-167
171-188
190-240

"B" dimension
ANY SIZE

Approx. weight
6.8 lbs/cu.ft.

See Rectangular Silencer Cross-Section Dimensions to ensure selection matches ductwork dimensions.

CERTIFIED PERFORMANCE DATA

VIBRO-ACOUSTICS®
A Swegon Group company

RD-ULV-F7

Rectangular Dissipative
Ultra low velocity silencer
(<500 fpm)

How to Specify Example:

37 X **21** **RD-ULV-F7** X **60**

Duct Width | Duct Height | Silencer Model | Silencer Length

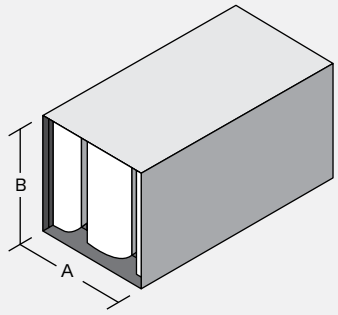

Insertion Loss (IL)

+ : "forward flow" where noise & airflow move in same direction (e.g. supply side)

- : "reverse flow" where noise & airflow move in opposite directions (e.g. return side)

See Silencer Selection Instructions. DIL above 50dB may be limited due to noise flanking around the silencer or along the duct walls. If more than 50dB DIL is required, contact your local Vibro-Acoustics representative or call **1-800-565-8401**.

Length (in.)	Face Velocity (ft. per min)	Octave Band - Hz/Dynamic Insertion Loss (dB)							
		63	125	250	500	1000	2000	4000	8000
36	- 500	7	10	22	29	35	29	19	13
	0	6	9	21	28	35	29	20	15
	+ 500	6	9	20	28	34	30	21	15
60	- 500	9	14	32	47	48	46	30	21
	0	9	13	31	46	48	47	33	22
	+ 500	8	13	30	44	47	47	34	23
84	- 500	12	21	42	55	54	53	38	24
	0	11	19	41	54	55	55	41	28
	+ 500	10	18	39	54	55	55	43	29
108	- 500	14	25	53	55	54	55	46	29
	0	13	23	50	55	55	55	48	32
	+ 500	12	22	48	55	54	55	49	34

Pressure Drop (PD)

Pressure drops are reported in accordance with ASTM E477 methods and are based upon **ideal** flow conditions (5 diameters of straight duct on silencer inlet and 10 on outlet). Less than ideal conditions will result in an increase in pressure drop due to System Effects. See Silencer System Effects Data.

Length (in.)	Face Velocity (ft. per min) / Pressure Drop (in.w.g.)						
	250	500	750	1000	1250	1500	1750
36	0.03	0.13	0.30	0.53	0.83	1.19	1.62
60	0.04	0.17	0.38	0.67	1.05	1.51	2.05
84	0.05	0.21	0.47	0.84	1.30	1.88	2.56
108	0.06	0.23	0.52	0.93	1.45	2.08	2.83

☐ Acceptable (0 - 0.35") ☐ Caution (>0.35") Pressure Drop may be too high for certain applications

Generated Noise (GN)

@ 5 sq.ft. face area

Length (in.)	Face Velocity (ft. per min)	Octave Band - Hz/Generated Noise (dB re 10^{-12} watts)							
		63	125	250	500	1K	2K	4K	8K
All	- 750	52	46	45	46	50	53	43	32
	- 500	51	41	40	42	45	43	29	28
	+ 500	51	40	34	31	34	31	23	27
	+ 750	54	49	42	39	41	43	36	29

GN correction chart at right must be used to correct GN to other face areas. →

Face Area (sq.ft.)	2.5	5	10	20	40	80
dB	-3	0	+3	+6	+9	+12

Cross Section Sizes*

"A" dimension (in.)
9
17-18
33-37
50-56
66-75
83-94
99-113
116-240

"B" dimension
ANY SIZE

Approx. weight
6.9 lbs/cu.ft.

See Rectangular Silencer Cross-Section Dimensions to ensure selection matches ductwork dimensions.

CERTIFIED PERFORMANCE DATA

VIBRO-ACOUSTICS®
A Swegon Group company

RD-ULV-F8

Rectangular Dissipative
Ultra low velocity silencer
(<500 fpm)

How to Specify Example:

14 X **22** **RD-ULV-F8** X **60**

Duct Width | Duct Height | Silencer Model | Silencer Length

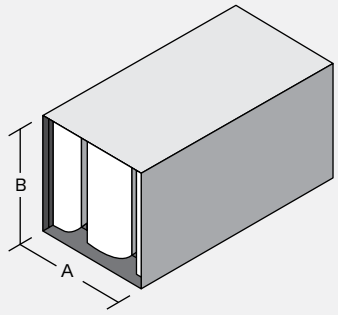

Insertion Loss (IL)

+ : "forward flow" where noise & airflow move in same direction (e.g. supply side)

- : "reverse flow" where noise & airflow move in opposite directions (e.g. return side)

See Silencer Selection Instructions. DIL above 50dB may be limited due to noise flanking around the silencer or along the duct walls. If more than 50dB DIL is required, contact your local Vibro-Acoustics representative or call **1-800-565-8401**.

Length (in.)	Face Velocity (ft. per min)	Octave Band - Hz/Dynamic Insertion Loss (dB)							
		63	125	250	500	1000	2000	4000	8000
36	- 500	5	11	19	28	35	30	24	20
	0	4	8	18	28	33	30	23	18
	+ 500	4	8	18	27	33	30	23	19
60	- 500	7	17	29	42	45	46	29	25
	0	6	14	28	40	44	46	30	24
	+ 500	6	14	27	40	44	46	30	25
84	- 500	10	23	38	55	55	55	35	30
	0	8	21	37	53	55	55	36	31
	+ 500	7	20	36	53	55	55	37	30
108	- 500	13	29	48	55	55	55	41	35
	0	10	28	46	55	55	55	43	37
	+ 500	9	26	45	55	55	55	44	36

Pressure Drop (PD)

Pressure drops are reported in accordance with ASTM E477 methods and are based upon **ideal** flow conditions (5 diameters of straight duct on silencer inlet and 10 on outlet). Less than ideal conditions will result in an increase in pressure drop due to System Effects. See Silencer System Effects Data.

Length (in.)	Face Velocity (ft. per min) / Pressure Drop (in.w.g.)						
	250	500	750	1000	1250	1500	1750
36	0.04	0.16	0.35	0.63	0.98	1.42	1.93
60	0.05	0.19	0.42	0.76	1.18	1.70	2.31
84	0.06	0.22	0.50	0.88	1.38	1.98	2.70
108	0.06	0.25	0.57	1.01	1.57	2.26	3.08

☐ Acceptable (0 - 0.35") ☐ Caution (>0.35") Pressure Drop may be too high for certain applications

Generated Noise (GN)

@ 5 sq.ft. face area

Length (in.)	Face Velocity (ft. per min)	Octave Band - Hz/Generated Noise (dB re 10^{-12} watts)							
		63	125	250	500	1K	2K	4K	8K
All	- 750	53	43	43	46	49	52	42	33
	- 500	54	40	39	44	43	40	26	30
	+ 500	51	41	34	33	33	29	24	29
	+ 750	56	50	41	38	39	41	33	30

GN correction chart at right must be used to correct GN to other face areas. →

Face Area (sq.ft.)	2.5	5	10	20	40	80
dB	-3	0	+3	+6	+9	+12

Cross Section Sizes*

"A" dimension (in.)
7-8
14-16
27-32
41-49
54-65
68-240

"B" dimension
ANY SIZE

Approx. weight
7.2 lbs/cu.ft.

See Rectangular Silencer Cross-Section Dimensions to ensure selection matches ductwork dimensions.

CERTIFIED PERFORMANCE DATA

VIBRO-ACOUSTICS®
A Swegon Group company

RD-ULV-F9

Rectangular Dissipative
Ultra low velocity silencer
(<500 fpm)

How to Specify Example:

21 X **21** **RD-ULV-F9** X **60**

Duct Width | Duct Height | Silencer Model | Silencer Length

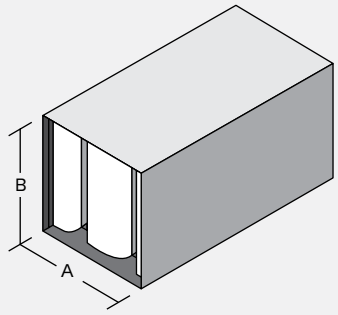

Insertion Loss (IL)

+ : "forward flow" where noise & airflow move in same direction (e.g. supply side)

- : "reverse flow" where noise & airflow move in opposite directions (e.g. return side)

See Silencer Selection Instructions. DIL above 50dB may be limited due to noise flanking around the silencer or along the duct walls. If more than 50dB DIL is required, contact your local Vibro-Acoustics representative or call **1-800-565-8401**.

Length (in.)	Face Velocity (ft. per min)	Octave Band - Hz/Dynamic Insertion Loss (dB)							
		63	125	250	500	1000	2000	4000	8000
36	- 500	5	10	18	29	43	35	24	15
	0	5	7	17	29	42	36	25	17
	+ 500	4	7	16	28	42	36	25	18
60	- 500	9	15	28	45	51	55	40	26
	0	8	13	27	44	51	55	42	29
	+ 500	7	13	26	43	50	55	44	29
84	- 500	10	22	38	53	53	55	50	33
	0	9	20	36	51	54	55	53	35
	+ 500	9	18	34	51	54	55	54	37
108	- 500	13	28	49	55	54	55	55	39
	0	12	25	46	55	53	55	55	42
	+ 500	10	24	43	55	53	55	55	43

Pressure Drop (PD)

Pressure drops are reported in accordance with ASTM E477 methods and are based upon **ideal** flow conditions (5 diameters of straight duct on silencer inlet and 10 on outlet). Less than ideal conditions will result in an increase in pressure drop due to System Effects. See Silencer System Effects Data.

Length (in.)	Face Velocity (ft. per min) / Pressure Drop (in.w.g.)						
	250	500	750	1000	1250	1500	1750
36	0.04	0.16	0.35	0.62	0.97	1.40	1.90
60	0.05	0.19	0.43	0.77	1.20	1.73	2.36
84	0.06	0.23	0.52	0.92	1.44	2.07	2.82
108	0.07	0.27	0.61	1.09	1.70	2.45	3.34

☐ Acceptable (0 - 0.35") ☐ Caution (>0.35") Pressure Drop may be too high for certain applications

Generated Noise (GN)

@ 5 sq.ft. face area

Length (in.)	Face Velocity (ft. per min)	Octave Band - Hz/Generated Noise (dB re 10^{-12} watts)							
		63	125	250	500	1K	2K	4K	8K
All	- 750	53	47	45	47	51	55	45	34
	- 500	51	41	40	43	46	43	29	28
	+ 500	51	41	34	32	34	30	23	27
	+ 750	54	51	44	41	42	44	36	29

GN correction chart at right must be used to correct GN to other face areas. →

Face Area (sq.ft.)	2.5	5	10	20	40	80
dB	-3	0	+3	+6	+9	+12

Cross Section Sizes*

"A" dimension (in.)
6
10-13
20-26
30-240

"B" dimension
ANY SIZE

Approx. weight
7.5 lbs/cu.ft.

See Rectangular Silencer Cross-Section Dimensions to ensure selection matches ductwork dimensions.

CERTIFIED PERFORMANCE DATA

VIBRO-ACOUSTICS®
A Swegon Group company

RD-LV-F1

Rectangular Dissipative
Low velocity silencer
(<750 fpm)

How to Specify Example:

32 X **21** **RD-LV-F1** X **60**

Duct Width	Duct Height	Silencer Model	Silencer Length

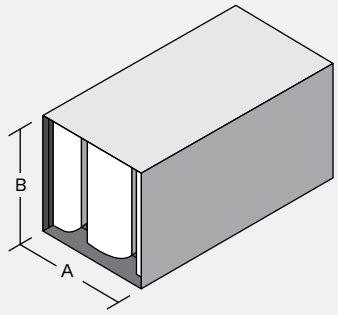

Insertion Loss (IL)

+ : "forward flow" where noise & airflow move in same direction (e.g. supply side)

- : "reverse flow" where noise & airflow move in opposite directions (e.g. return side)

See Silencer Selection Instructions. DIL above 50dB may be limited due to noise flanking around the silencer or along the duct walls. If more than 50dB DIL is required, contact your local Vibro-Acoustics representative or call **1-800-565-8401**.

Length (in.)	Face Velocity (ft. per min)	Octave Band - Hz/Dynamic Insertion Loss (dB)							
		63	125	250	500	1000	2000	4000	8000
36	- 750	7	11	17	18	21	15	15	13
	0	5	11	17	18	21	18	16	13
	+ 750	5	10	16	17	20	18	16	13
60	- 750	10	15	27	29	34	24	18	16
	0	9	14	26	28	34	25	19	16
	+ 750	8	14	24	27	34	25	20	16
84	- 750	13	19	36	40	47	33	21	18
	0	12	18	35	38	47	32	23	19
	+ 750	11	18	33	37	47	33	23	18
108	- 750	17	23	45	46	55	41	24	21
	0	15	22	44	46	55	38	26	22
	+ 750	13	21	42	46	55	40	27	21

Pressure Drop (PD)

Pressure drops are reported in accordance with ASTM E477 methods and are based upon **ideal** flow conditions (5 diameters of straight duct on silencer inlet and 10 on outlet). Less than ideal conditions will result in an increase in pressure drop due to System Effects. See Silencer System Effects Data.

Length (in.)	Face Velocity (ft. per min) / Pressure Drop (in.w.g.)						
	250	500	750	1000	1250	1500	1750
36	0.02	0.07	0.15	0.27	0.42	0.61	0.83
60	0.02	0.09	0.20	0.36	0.56	0.80	1.09
84	0.03	0.11	0.25	0.45	0.70	1.00	1.36
108	0.03	0.13	0.30	0.53	0.83	1.20	1.63

☐ Acceptable (0 - 0.35") ☐ Caution (>0.35") Pressure Drop may be too high for certain applications

Generated Noise (GN)

@ 5 sq.ft. face area

Length (in.)	Face Velocity (ft. per min)	Octave Band - Hz/Generated Noise (dB re 10^{-12} watts)							
		63	125	250	500	1K	2K	4K	8K
All	- 750	52	44	40	44	48	46	34	27
	- 500	52	41	38	40	39	32	22	26
	+ 500	54	38	31	29	31	27	21	26
	+ 750	52	43	36	34	38	38	28	26

GN correction chart at right must be used to correct GN to other face areas. →

Face Area (sq.ft.)	2.5	5	10	20	40	80
dB	-3	0	+3	+6	+9	+12

Cross Section Sizes*

"A" dimension (in.)
15-16
29-32
58-64
87-96
116-128
145-160
174-192
203-224
232-240

"B" dimension
ANY SIZE

Approx. weight
6.4 lbs/cu.ft.

See Rectangular Silencer Cross-Section Dimensions to ensure selection matches ductwork dimensions.

CERTIFIED PERFORMANCE DATA

VIBRO-ACOUSTICS®
A Swegon Group company

RD-LV-F2

Rectangular Dissipative
Low velocity silencer
(<750 fpm)

How to Specify Example:

27 X **22** **RD-LV-F2** X **60**

Duct Width	Duct Height	Silencer Model	Silencer Length

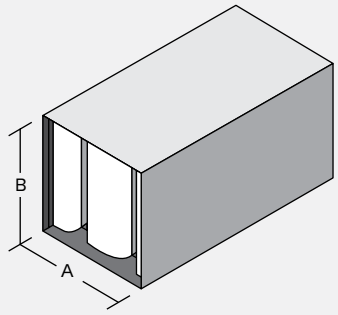

Insertion Loss (IL)

+ : "forward flow" where noise & airflow move in same direction (e.g. supply side)

- : "reverse flow" where noise & airflow move in opposite directions (e.g. return side)

See Silencer Selection Instructions. DIL above 50dB may be limited due to noise flanking around the silencer or along the duct walls. If more than 50dB DIL is required, contact your local Vibro-Acoustics representative or call **1-800-565-8401**.

Length (in.)	Face Velocity (ft. per min)	Octave Band - Hz/Dynamic Insertion Loss (dB)							
		63	125	250	500	1000	2000	4000	8000
36	- 750	7	10	17	20	22	17	14	12
	0	5	10	17	19	22	18	15	12
	+ 750	5	9	16	18	22	19	15	12
60	- 750	10	15	26	32	36	26	18	14
	0	9	14	25	31	36	27	19	15
	+ 750	8	13	24	30	36	28	20	15
84	- 750	13	19	35	42	50	36	21	17
	0	12	18	34	41	50	36	23	18
	+ 750	11	17	32	40	50	38	24	18
108	- 750	16	23	44	46	55	43	25	19
	0	15	22	42	46	55	43	27	20
	+ 750	13	21	41	46	55	44	28	20

Pressure Drop (PD)

Pressure drops are reported in accordance with ASTM E477 methods and are based upon **ideal** flow conditions (5 diameters of straight duct on silencer inlet and 10 on outlet). Less than ideal conditions will result in an increase in pressure drop due to System Effects. See Silencer System Effects Data.

Length (in.)	Face Velocity (ft. per min) / Pressure Drop (in.w.g.)						
	250	500	750	1000	1250	1500	1750
36	0.02	0.07	0.15	0.26	0.41	0.59	0.81
60	0.02	0.09	0.20	0.35	0.55	0.79	1.08
84	0.03	0.11	0.24	0.43	0.67	0.97	1.32
108	0.03	0.12	0.28	0.50	0.77	1.11	1.52

☐ Acceptable (0 - 0.35") ☐ Caution (>0.35") Pressure Drop may be too high for certain applications

Generated Noise (GN)

@ 5 sq.ft. face area

Length (in.)	Face Velocity (ft. per min)	Octave Band - Hz/Generated Noise (dB re 10^{-12} watts)							
		63	125	250	500	1K	2K	4K	8K
All	- 750	51	45	42	46	48	47	34	27
	- 500	51	42	41	41	40	33	22	25
	+ 500	53	38	32	30	31	28	21	25
	+ 750	52	43	37	35	38	39	29	25

GN correction chart at right must be used to correct GN to other face areas. →

Face Area (sq.ft.)	2.5	5	10	20	40	80
dB	-3	0	+3	+6	+9	+12

Cross Section Sizes*
"A" dimension (in.)
14
27-28
54-57
81-86
108-115
135-144
162-173
189-202
216-231
"B" dimension
ANY SIZE
Approx. weight
6.4 lbs/cu.ft.
See Rectangular Silencer Cross-Section Dimensions to ensure selection matches ductwork dimensions.

CERTIFIED PERFORMANCE DATA

VIBRO-ACOUSTICS®
A Swegon Group company

RD-LV-F3

Rectangular Dissipative
Low velocity silencer
(<750 fpm)

How to Specify Example:

25 X **21** **RD-LV-F3** X **60**

Duct Width	Duct Height	Silencer Model	Silencer Length

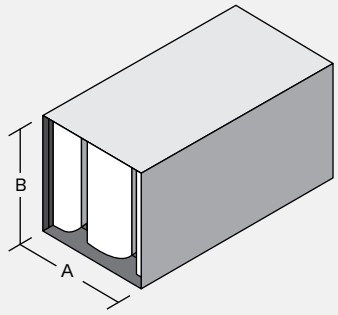

Insertion Loss (IL)

+ : "forward flow" where noise & airflow move in same direction (e.g. supply side)

- : "reverse flow" where noise & airflow move in opposite directions (e.g. return side)

See Silencer Selection Instructions. DIL above 50dB may be limited due to noise flanking around the silencer or along the duct walls. If more than 50dB DIL is required, contact your local Vibro-Acoustics representative or call **1-800-565-8401**.

Length (in.)	Face Velocity (ft. per min)	Octave Band - Hz/Dynamic Insertion Loss (dB)							
		63	125	250	500	1000	2000	4000	8000
36	- 750	7	10	17	21	23	18	13	11
	0	5	9	16	21	23	19	14	11
	+ 750	5	8	15	20	23	19	14	12
60	- 750	9	15	25	35	38	28	17	13
	0	8	14	24	34	38	29	19	14
	+ 750	8	13	23	33	38	30	20	14
84	- 750	13	19	35	44	55	39	22	15
	0	12	18	33	44	55	41	24	17
	+ 750	11	17	32	43	55	43	25	17
108	- 750	16	24	43	46	55	45	25	18
	0	15	22	41	46	55	47	28	19
	+ 750	13	21	39	46	55	48	29	20

Pressure Drop (PD)

Pressure drops are reported in accordance with ASTM E477 methods and are based upon **ideal** flow conditions (5 diameters of straight duct on silencer inlet and 10 on outlet). Less than ideal conditions will result in an increase in pressure drop due to System Effects. See Silencer System Effects Data.

Length (in.)	Face Velocity (ft. per min) / Pressure Drop (in.w.g.)						
	250	500	750	1000	1250	1500	1750
36	0.02	0.06	0.14	0.26	0.40	0.58	0.79
60	0.02	0.09	0.19	0.35	0.54	0.78	1.06
84	0.03	0.10	0.23	0.42	0.65	0.93	1.27
108	0.03	0.11	0.26	0.46	0.71	1.03	1.40

☐ Acceptable (0 - 0.35") ☐ Caution (>0.35") Pressure Drop may be too high for certain applications

Generated Noise (GN)

@ 5 sq.ft. face area

Length (in.)	Face Velocity (ft. per min)	Octave Band - Hz/Generated Noise (dB re 10^{-12} watts)							
		63	125	250	500	1K	2K	4K	8K
All	- 750	50	46	44	47	49	47	35	26
	- 500	51	42	43	43	41	35	23	24
	+ 500	51	39	33	31	32	28	21	24
	+ 750	52	44	38	35	39	39	29	25

GN correction chart at right must be used to correct GN to other face areas. →

Face Area (sq.ft.)	2.5	5	10	20	40	80
dB	-3	0	+3	+6	+9	+12

Cross Section Sizes*

"A" dimension (in.)
13
25-26
50-53
75-80
100-107
125-134
150-161
175-188
200-215
225-240

"B" dimension
ANY SIZE

Approx. weight
6.6 lbs/cu.ft.

See Rectangular Silencer Cross-Section Dimensions to ensure selection matches ductwork dimensions.

CERTIFIED PERFORMANCE DATA

VIBRO-ACOUSTICS®
A Swegon Group company

RD-LV-F4

Rectangular Dissipative
Low velocity silencer
(<750 fpm)

How to Specify Example:

47 X **22** **RD-LV-F4** X **60**

Duct Width	Duct Height	Silencer Model	Silencer Length

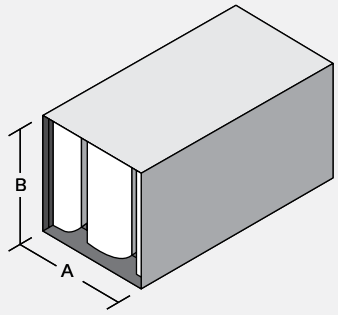

Insertion Loss (IL)

+ : "forward flow" where noise & airflow move in same direction (e.g. supply side)

- : "reverse flow" where noise & airflow move in opposite directions (e.g. return side)

See Silencer Selection Instructions. DIL above 50dB may be limited due to noise flanking around the silencer or along the duct walls. If more than 50dB DIL is required, contact your local Vibro-Acoustics representative or call **1-800-565-8401**.

Length (in.)	Face Velocity (ft. per min)	Octave Band - Hz/Dynamic Insertion Loss (dB)							
		63	125	250	500	1000	2000	4000	8000
36	- 750	7	9	17	23	24	19	12	10
	0	5	8	16	22	24	19	13	10
	+ 750	5	7	15	21	24	20	14	11
60	- 750	9	14	24	38	40	30	17	12
	0	8	13	23	38	39	32	19	13
	+ 750	8	12	22	36	40	33	20	14
84	- 750	14	19	34	46	55	42	22	14
	0	12	18	32	46	55	46	24	15
	+ 750	11	16	31	45	55	49	26	16
108	- 750	15	24	41	45	55	47	25	17
	0	15	22	39	46	55	51	28	18
	+ 750	13	21	38	46	55	52	30	19

Pressure Drop (PD)

Pressure drops are reported in accordance with ASTM E477 methods and are based upon **ideal** flow conditions (5 diameters of straight duct on silencer inlet and 10 on outlet). Less than ideal conditions will result in an increase in pressure drop due to System Effects. See Silencer System Effects Data.

Length (in.)	Face Velocity (ft. per min) / Pressure Drop (in.w.g.)						
	250	500	750	1000	1250	1500	1750
36	0.02	0.06	0.14	0.25	0.39	0.56	0.77
60	0.02	0.09	0.19	0.34	0.53	0.77	1.04
84	0.03	0.10	0.23	0.40	0.63	0.90	1.23
108	0.03	0.11	0.24	0.42	0.66	0.95	1.29

☐ Acceptable (0 - 0.35") ☐ Caution (>0.35") Pressure Drop may be too high for certain applications

Generated Noise (GN)

@ 5 sq.ft. face area

Length (in.)	Face Velocity (ft. per min)	Octave Band - Hz/Generated Noise (dB re 10^{-12} watts)							
		63	125	250	500	1K	2K	4K	8K
All	- 750	49	48	46	49	50	48	35	25
	- 500	51	43	45	44	43	36	23	24
	+ 500	50	39	34	31	32	29	20	23
	+ 750	52	45	39	36	39	40	30	25

GN correction chart at right must be used to correct GN to other face areas. →

Face Area (sq.ft.)	2.5	5	10	20	40	80
dB	-3	0	+3	+6	+9	+12

Cross Section Sizes*

"A" dimension (in.)
12
23-24
46-49
69-74
92-99
115-124
138-149
161-174
184-199
207-224
230-240

"B" dimension
ANY SIZE

Approx. weight
6.7 lbs/cu.ft.

See Rectangular Silencer Cross-Section Dimensions to ensure selection matches ductwork dimensions.

CERTIFIED PERFORMANCE DATA

VIBRO-ACOUSTICS®
A Swegon Group company

RD-LV-F5

Rectangular Dissipative
Low velocity silencer
(<750 fpm)

How to Specify Example:

44 X **22** **RD-LV-F5** X **60**

Duct Width	Duct Height	Silencer Model	Silencer Length

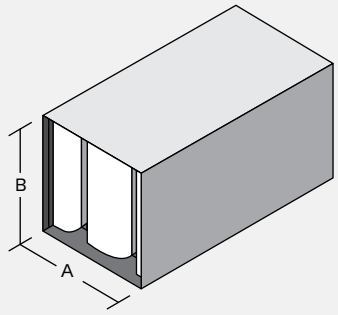

Insertion Loss (IL)

+ : "forward flow" where noise & airflow move in same direction (e.g. supply side)

- : "reverse flow" where noise & airflow move in opposite directions (e.g. return side)

See Silencer Selection Instructions. DIL above 50dB may be limited due to noise flanking around the silencer or along the duct walls. If more than 50dB DIL is required, contact your local Vibro-Acoustics representative or call **1-800-565-8401**.

Length (in.)	Face Velocity (ft. per min)	Octave Band - Hz/Dynamic Insertion Loss (dB)							
		63	125	250	500	1000	2000	4000	8000
36	- 750	6	8	16	23	27	22	14	10
	0	5	8	15	22	27	21	15	11
	+ 750	4	7	14	21	27	22	15	11
60	- 750	8	14	23	38	42	33	20	13
	0	8	13	22	37	42	36	22	15
	+ 750	8	12	21	36	42	37	23	16
84	- 750	13	19	33	46	55	45	27	16
	0	12	18	31	46	55	49	29	18
	+ 750	11	17	30	45	55	51	31	19
108	- 750	15	24	40	45	55	48	29	19
	0	14	22	38	46	55	53	33	21
	+ 750	13	21	36	46	55	54	35	22

Pressure Drop (PD)

Pressure drops are reported in accordance with ASTM E477 methods and are based upon **ideal** flow conditions (5 diameters of straight duct on silencer inlet and 10 on outlet). Less than ideal conditions will result in an increase in pressure drop due to System Effects. See Silencer System Effects Data.

Length (in.)	Face Velocity (ft. per min) / Pressure Drop (in.w.g.)						
	250	500	750	1000	1250	1500	1750
36	0.02	0.07	0.15	0.26	0.41	0.59	0.80
60	0.02	0.09	0.21	0.37	0.58	0.83	1.13
84	0.03	0.11	0.24	0.43	0.67	0.96	1.31
108	0.03	0.11	0.25	0.45	0.70	1.00	1.37

☐ Acceptable (0 - 0.35") ☐ Caution (>0.35") Pressure Drop may be too high for certain applications

Generated Noise (GN)

@ 5 sq.ft. face area

Length (in.)	Face Velocity (ft. per min)	Octave Band - Hz/Generated Noise (dB re 10^{-12} watts)							
		63	125	250	500	1K	2K	4K	8K
All	- 750	50	47	46	49	50	48	36	26
	- 500	51	42	45	45	43	37	23	24
	+ 500	50	39	34	32	31	28	20	23
	+ 750	51	45	39	36	39	40	30	25

GN correction chart at right must be used to correct GN to other face areas. →

Face Area (sq.ft.)	2.5	5	10	20	40	80
dB	-3	0	+3	+6	+9	+12

Cross Section Sizes*

"A" dimension (in.)
11
21-22
42-45
63-68
84-91
105-114
126-137
147-160
168-183
189-206
210-229
231-240

"B" dimension
ANY SIZE

Approx. weight
6.5 lbs/cu.ft.

See Rectangular Silencer Cross-Section Dimensions to ensure selection matches ductwork dimensions.

CERTIFIED PERFORMANCE DATA

VIBRO-ACOUSTICS®
A Swegon Group company

RD-LV-F6

Rectangular Dissipative
Low velocity silencer
(<750 fpm)

How to Specify Example:

40 X **21** **RD-LV-F6** X **60**

Duct Width	Duct Height	Silencer Model	Silencer Length

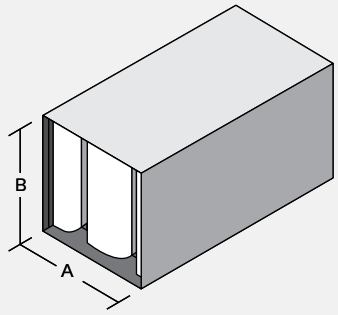

Insertion Loss (IL)

+ : "forward flow" where noise & airflow move in same direction (e.g. supply side)

- : "reverse flow" where noise & airflow move in opposite directions (e.g. return side)

See Silencer Selection Instructions. DIL above 50dB may be limited due to noise flanking around the silencer or along the duct walls. If more than 50dB DIL is required, contact your local Vibro-Acoustics representative or call **1-800-565-8401**.

Length (in.)	Face Velocity (ft. per min)	Octave Band - Hz/Dynamic Insertion Loss (dB)							
		63	125	250	500	1000	2000	4000	8000
36	- 750	6	8	15	23	30	24	15	11
	0	5	8	15	22	30	24	16	12
	+ 750	4	7	14	22	29	24	17	12
60	- 750	8	14	23	37	44	37	22	15
	0	8	13	22	36	44	40	25	17
	+ 750	7	12	21	35	44	41	26	17
84	- 750	13	20	32	46	55	47	32	18
	0	11	18	30	46	55	51	34	21
	+ 750	10	17	29	45	55	53	36	22
108	- 750	14	25	38	45	55	50	33	21
	0	14	22	36	46	55	55	37	23
	+ 750	12	21	35	46	55	55	39	25

Pressure Drop (PD)

Pressure drops are reported in accordance with ASTM E477 methods and are based upon **ideal** flow conditions (5 diameters of straight duct on silencer inlet and 10 on outlet). Less than ideal conditions will result in an increase in pressure drop due to System Effects. See Silencer System Effects Data.

Length (in.)	Face Velocity (ft. per min) / Pressure Drop (in.w.g.)						
	250	500	750	1000	1250	1500	1750
36	0.02	0.07	0.15	0.27	0.42	0.61	0.83
60	0.02	0.10	0.22	0.40	0.62	0.89	1.21
84	0.03	0.11	0.26	0.45	0.71	1.02	1.39
108	0.03	0.12	0.27	0.47	0.74	1.06	1.44

☐ Acceptable (0 - 0.35") ☐ Caution (>0.35") Pressure Drop may be too high for certain applications

Cross Section Sizes*
"A" dimension (in.)
10
19-20
38-41
57-62
76-83
95-104
114-125
133-146
152-167
171-188
190-240
"B" dimension
ANY SIZE
Approx. weight
6.6 lbs/cu.ft.
See Rectangular Silencer Cross-Section Dimensions to ensure selection matches ductwork dimensions.

Generated Noise (GN)

@ 5 sq.ft. face area

Length (in.)	Face Velocity (ft. per min)	Octave Band - Hz/Generated Noise (dB re 10^{-12} watts)							
		63	125	250	500	1K	2K	4K	8K
All	- 750	50	46	45	48	51	49	36	26
	- 500	51	42	45	45	44	37	24	24
	+ 500	50	39	34	32	30	27	20	23
	+ 750	51	44	39	36	39	40	30	25

GN correction chart at right must be used to correct GN to other face areas. →

Face Area (sq.ft.)	2.5	5	10	20	40	80
dB	-3	0	+3	+6	+9	+12

CERTIFIED PERFORMANCE DATA

VIBRO-ACOUSTICS®
A Swegon Group company

RD-LV-F7

Rectangular Dissipative
Low velocity silencer
(<750 fpm)

How to Specify Example:

37 X **21** **RD-LV-F7** X **60**

Duct Width	Duct Height	Silencer Model	Silencer Length

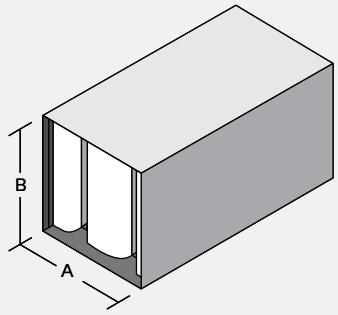

Insertion Loss (IL)

+ : "forward flow" where noise & airflow move in same direction (e.g. supply side)

- : "reverse flow" where noise & airflow move in opposite directions (e.g. return side)

See Silencer Selection Instructions. DIL above 50dB may be limited due to noise flanking around the silencer or along the duct walls. If more than 50dB DIL is required, contact your local Vibro-Acoustics representative or call **1-800-565-8401**.

Length (in.)	Face Velocity (ft. per min)	Octave Band - Hz/Dynamic Insertion Loss (dB)							
		63	125	250	500	1000	2000	4000	8000
36	- 750	6	8	19	28	31	25	17	12
	0	5	7	18	27	31	25	17	13
	+ 750	4	6	17	26	30	26	18	13
60	- 750	8	13	28	44	44	39	25	16
	0	7	11	26	44	44	43	27	19
	+ 750	7	11	25	42	44	43	29	20
84	- 750	12	19	40	55	52	48	36	21
	0	11	17	38	55	53	52	39	24
	+ 750	10	15	35	54	53	53	40	26
108	- 750	13	22	47	55	52	49	37	23
	0	13	20	44	55	53	54	42	27
	+ 750	12	19	42	55	52	55	43	29

Pressure Drop (PD)

Pressure drops are reported in accordance with ASTM E477 methods and are based upon **ideal** flow conditions (5 diameters of straight duct on silencer inlet and 10 on outlet). Less than ideal conditions will result in an increase in pressure drop due to System Effects. See Silencer System Effects Data.

Length (in.)	Face Velocity (ft. per min) / Pressure Drop (in.w.g.)						
	250	500	750	1000	1250	1500	1750
36	0.02	0.07	0.16	0.28	0.44	0.63	0.86
60	0.03	0.11	0.24	0.43	0.66	0.96	1.30
84	0.03	0.12	0.27	0.48	0.75	1.08	1.47
108	0.03	0.12	0.28	0.50	0.78	1.12	1.52

☐ Acceptable (0 - 0.35") ☐ Caution (>0.35") Pressure Drop may be too high for certain applications

Generated Noise (GN)

@ 5 sq.ft. face area

Length (in.)	Face Velocity (ft. per min)	Octave Band - Hz/Generated Noise (dB re 10^{-12} watts)							
		63	125	250	500	1K	2K	4K	8K
All	- 750	50	46	44	48	51	49	37	26
	- 500	51	42	45	46	44	38	24	24
	+ 500	50	39	34	33	30	26	20	23
	+ 750	51	44	38	37	39	39	31	25

GN correction chart at right must be used to correct GN to other face areas. →

Face Area (sq.ft.)	2.5	5	10	20	40	80
dB	-3	0	+3	+6	+9	+12

Cross Section Sizes*

"A" dimension (in.)
9
17-18
33-37
50-56
66-75
83-94
99-113
116-240

"B" dimension
ANY SIZE

Approx. weight
6.7 lbs/cu.ft.

See Rectangular Silencer Cross-Section Dimensions to ensure selection matches ductwork dimensions.

CERTIFIED PERFORMANCE DATA

VIBRO-ACOUSTICS®
A Swegon Group company

RD-LV-F8

Rectangular Dissipative
Low velocity silencer
(<750 fpm)

How to Specify Example:

14 X **22** **RD-LV-F8** X **60**

Duct Width	Duct Height	Silencer Model	Silencer Length

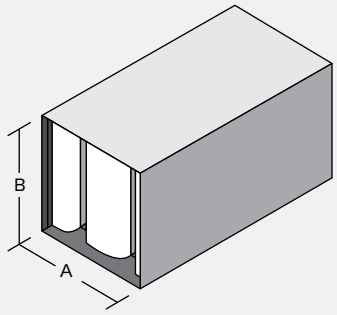

Insertion Loss (IL)

+ : "forward flow" where noise & airflow move in same direction (e.g. supply side)

- : "reverse flow" where noise & airflow move in opposite directions (e.g. return side)

See Silencer Selection Instructions. DIL above 50dB may be limited due to noise flanking around the silencer or along the duct walls. If more than 50dB DIL is required, contact your local Vibro-Acoustics representative or call **1-800-565-8401**.

Length (in.)	Face Velocity (ft. per min)	Octave Band - Hz/Dynamic Insertion Loss (dB)							
		63	125	250	500	1000	2000	4000	8000
36	- 750	4	9	17	28	30	27	20	17
	0	3	7	16	27	30	26	20	17
	+ 750	3	7	15	26	29	26	21	17
60	- 750	7	15	27	42	42	41	28	21
	0	6	13	25	40	42	43	29	22
	+ 750	5	12	24	39	41	43	29	22
84	- 750	10	21	37	55	53	55	36	25
	0	9	19	34	54	54	55	37	27
	+ 750	7	17	32	53	54	55	38	27
108	- 750	13	27	46	55	55	55	44	29
	0	11	25	43	55	55	55	46	33
	+ 750	9	22	41	55	55	55	47	32

Pressure Drop (PD)

Pressure drops are reported in accordance with ASTM E477 methods and are based upon **ideal** flow conditions (5 diameters of straight duct on silencer inlet and 10 on outlet). Less than ideal conditions will result in an increase in pressure drop due to System Effects. See Silencer System Effects Data.

Length (in.)	Face Velocity (ft. per min) / Pressure Drop (in.w.g.)						
	250	500	750	1000	1250	1500	1750
36	0.02	0.08	0.18	0.32	0.50	0.72	0.98
60	0.03	0.11	0.24	0.42	0.66	0.95	1.29
84	0.03	0.13	0.29	0.52	0.81	1.17	1.59
108	0.04	0.16	0.35	0.62	0.97	1.40	1.90

☐ Acceptable (0 - 0.35") ☐ Caution (>0.35") Pressure Drop may be too high for certain applications

Generated Noise (GN)

@ 5 sq.ft. face area

Length (in.)	Face Velocity (ft. per min)	Octave Band - Hz/Generated Noise (dB re 10^{-12} watts)							
		63	125	250	500	1K	2K	4K	8K
All	- 750	51	41	39	45	50	48	36	27
	- 500	53	40	43	49	43	37	24	26
	+ 500	51	38	34	35	26	22	21	26
	+ 750	52	43	35	34	36	36	28	26

GN correction chart at right must be used to correct GN to other face areas. →

Face Area (sq.ft.)	2.5	5	10	20	40	80
dB	-3	0	+3	+6	+9	+12

Cross Section Sizes*

"A" dimension (in.)
7-8
14-16
27-32
41-49
54-65
68-240

"B" dimension
ANY SIZE

Approx. weight
7.0 lbs/cu.ft.

See Rectangular Silencer Cross-Section Dimensions to ensure selection matches ductwork dimensions.

CERTIFIED PERFORMANCE DATA

VIBRO-ACOUSTICS®
A Swegon Group company

RD-LV-F9

Rectangular Dissipative
Low velocity silencer
(<750 fpm)

How to Specify Example:

21 X **21** **RD-LV-F9** X **60**

Duct Width	Duct Height	Silencer Model	Silencer Length

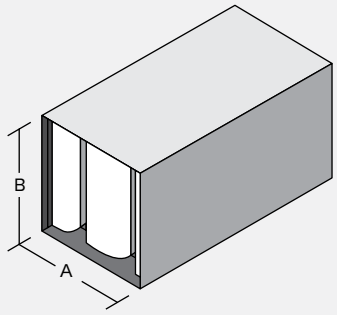

Insertion Loss (IL)

+ : "forward flow" where noise & airflow move in same direction (e.g. supply side)

- : "reverse flow" where noise & airflow move in opposite directions (e.g. return side)

See Silencer Selection Instructions. DIL above 50dB may be limited due to noise flanking around the silencer or along the duct walls. If more than 50dB DIL is required, contact your local Vibro-Acoustics representative or call **1-800-565-8401**.

Length (in.)	Face Velocity (ft. per min)	Octave Band - Hz/Dynamic Insertion Loss (dB)							
		63	125	250	500	1000	2000	4000	8000
36	- 750	5	7	16	28	39	32	21	13
	0	4	6	15	28	38	32	22	15
	+ 750	3	6	14	26	38	32	23	15
60	- 750	8	12	25	42	50	50	32	20
	0	6	11	23	41	51	55	36	24
	+ 750	6	10	22	40	51	55	38	25
84	- 750	11	21	37	53	52	55	50	27
	0	10	17	33	53	53	55	54	32
	+ 750	8	15	31	52	53	55	55	35
108	- 750	12	23	41	54	51	53	50	29
	0	12	19	38	55	53	55	55	36
	+ 750	10	18	36	54	53	55	55	38

Pressure Drop (PD)

Pressure drops are reported in accordance with ASTM E477 methods and are based upon **ideal** flow conditions (5 diameters of straight duct on silencer inlet and 10 on outlet). Less than ideal conditions will result in an increase in pressure drop due to System Effects. See Silencer System Effects Data.

Length (in.)	Face Velocity (ft. per min) / Pressure Drop (in.w.g.)						
	250	500	750	1000	1250	1500	1750
36	0.02	0.08	0.17	0.31	0.48	0.70	0.95
60	0.03	0.13	0.29	0.51	0.80	1.15	1.56
84	0.04	0.14	0.32	0.56	0.88	1.26	1.72
108	0.04	0.14	0.32	0.58	0.90	1.29	1.76

☐ Acceptable (0 - 0.35") ☐ Caution (>0.35") Pressure Drop may be too high for certain applications

Generated Noise (GN)

@ 5 sq.ft. face area

Length (in.)	Face Velocity (ft. per min)	Octave Band - Hz/Generated Noise (dB re 10^{-12} watts)							
		63	125	250	500	1K	2K	4K	8K
All	- 750	51	44	41	46	52	51	39	27
	- 500	51	41	44	48	46	40	26	24
	+ 500	51	38	34	34	27	23	19	23
	+ 750	50	43	38	37	40	39	31	25

GN correction chart at right must be used to correct GN to other face areas. →

Face Area (sq.ft.)	2.5	5	10	20	40	80
dB	-3	0	+3	+6	+9	+12

Cross Section Sizes*
"A" dimension (in.) 6 10-13 20-26 30-240
"B" dimension ANY SIZE
Approx. weight 7.3 lbs/cu.ft.
See Rectangular Silencer Cross-Section Dimensions to ensure selection matches ductwork dimensions.

CERTIFIED PERFORMANCE DATA

VIBRO-ACOUSTICS®
A Swegon Group company

RD-MV-F1

Rectangular Dissipative
Medium velocity silencer
(<1250 fpm)

How to Specify Example:

32 X **21** **RD-MV-F1** X **60**

Duct Width	Duct Height	Silencer Model	Silencer Length

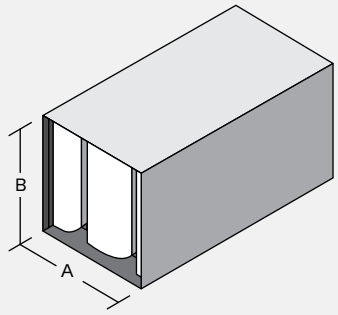

Insertion Loss (IL)

+ : "forward flow" where noise & airflow move in same direction (e.g. supply side)

- : "reverse flow" where noise & airflow move in opposite directions (e.g. return side)

See Silencer Selection Instructions. DIL above 50dB may be limited due to noise flanking around the silencer or along the duct walls. If more than 50dB DIL is required, contact your local Vibro-Acoustics representative or call **1-800-565-8401**.

Length (in.)	Face Velocity (ft. per min)	Octave Band - Hz/Dynamic Insertion Loss (dB)							
		63	125	250	500	1000	2000	4000	8000
36	- 1250	5	10	14	15	18	14	13	11
	0	4	8	13	14	17	15	13	11
	+ 1250	4	8	12	14	17	15	13	11
60	- 1250	7	13	22	24	27	20	16	13
	0	6	12	21	23	26	19	16	13
	+ 1250	6	11	19	22	26	20	16	13
84	- 1250	10	17	29	33	36	26	18	15
	0	9	15	28	31	35	24	19	16
	+ 1250	8	14	26	30	36	25	19	15
108	- 1250	12	21	37	41	45	32	21	17
	0	11	19	36	40	45	29	22	18
	+ 1250	10	17	33	38	46	30	23	18

Pressure Drop (PD)

Pressure drops are reported in accordance with ASTM E477 methods and are based upon **ideal** flow conditions (5 diameters of straight duct on silencer inlet and 10 on outlet). Less than ideal conditions will result in an increase in pressure drop due to System Effects. See Silencer System Effects Data.

Length (in.)	Face Velocity (ft. per min) / Pressure Drop (in.w.g.)						
	500	750	1000	1250	1500	1750	2000
36	0.03	0.07	0.13	0.21	0.30	0.40	0.53
60	0.04	0.10	0.18	0.28	0.40	0.54	0.70
84	0.06	0.12	0.22	0.34	0.50	0.67	0.88
108	0.07	0.15	0.26	0.41	0.59	0.81	1.06

☐ Acceptable (0 - 0.35") ☐ Caution (>0.35") Pressure Drop may be too high for certain applications

Generated Noise (GN)

@ 5 sq.ft. face area

Length (in.)	Face Velocity (ft. per min)	Octave Band - Hz/Generated Noise (dB re 10^{-12} watts)							
		63	125	250	500	1K	2K	4K	8K
All	- 1250	53	50	49	50	52	50	40	28
	- 750	50	43	42	41	41	34	22	26
	+ 750	51	39	35	33	37	33	23	26
	+ 1250	56	51	45	43	45	47	40	29

GN correction chart at right must be used to correct GN to other face areas. →

Face Area (sq.ft.)	2.5	5	10	20	40	80
dB	-3	0	+3	+6	+9	+12

Cross Section Sizes*

"A" dimension (in.)
15-16
29-32
58-64
87-96
116-128
145-160
174-192
203-224
232-240

"B" dimension
ANY SIZE

Approx. weight
6.0 lbs/cu.ft.

See Rectangular Silencer Cross-Section Dimensions to ensure selection matches ductwork dimensions.

CERTIFIED PERFORMANCE DATA

VIBRO-ACOUSTICS®
A Swegon Group company

RD-MV-F2

Rectangular Dissipative
Medium velocity silencer
(<1250 fpm)

How to Specify Example:

27 X **22** **RD-MV-F2** X **60**

Duct Width	Duct Height	Silencer Model	Silencer Length

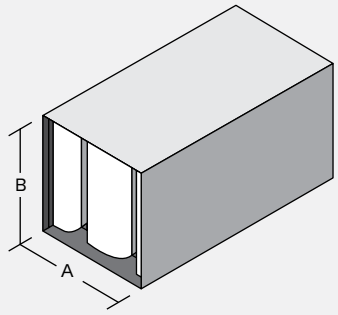

Insertion Loss (IL)

+ : "forward flow" where noise & airflow move in same direction (e.g. supply side)

- : "reverse flow" where noise & airflow move in opposite directions (e.g. return side)

See Silencer Selection Instructions. DIL above 50dB may be limited due to noise flanking around the silencer or along the duct walls. If more than 50dB DIL is required, contact your local Vibro-Acoustics representative or call **1-800-565-8401**.

Length (in.)	Face Velocity (ft. per min)	Octave Band - Hz/Dynamic Insertion Loss (dB)							
		63	125	250	500	1000	2000	4000	8000
36	- 1250	5	9	14	16	18	14	12	10
	0	4	8	13	16	17	14	12	10
	+ 1250	4	7	12	15	17	15	12	10
60	- 1250	6	13	21	26	28	20	15	12
	0	5	11	20	25	27	20	15	13
	+ 1250	5	10	19	24	27	21	16	12
84	- 1250	11	17	28	36	38	26	18	14
	0	9	15	27	35	37	26	18	15
	+ 1250	8	14	25	33	38	27	19	15
108	- 1250	12	21	35	42	48	32	20	15
	0	11	19	34	42	47	31	21	17
	+ 1250	10	17	32	41	48	32	22	17

Pressure Drop (PD)

Pressure drops are reported in accordance with ASTM E477 methods and are based upon **ideal** flow conditions (5 diameters of straight duct on silencer inlet and 10 on outlet). Less than ideal conditions will result in an increase in pressure drop due to System Effects. See Silencer System Effects Data.

Length (in.)	Face Velocity (ft. per min) / Pressure Drop (in.w.g.)						
	500	750	1000	1250	1500	1750	2000
36	0.03	0.07	0.12	0.19	0.27	0.37	0.49
60	0.04	0.09	0.16	0.26	0.37	0.50	0.66
84	0.05	0.11	0.20	0.31	0.45	0.61	0.80
108	0.06	0.13	0.24	0.37	0.54	0.73	0.96

☐ Acceptable (0 - 0.35") ☐ Caution (>0.35") Pressure Drop may be too high for certain applications

Generated Noise (GN)

@ 5 sq.ft. face area

Length (in.)	Face Velocity (ft. per min)	Octave Band - Hz/Generated Noise (dB re 10^{-12} watts)							
		63	125	250	500	1K	2K	4K	8K
All	- 1250	53	50	48	50	52	51	40	28
	- 750	50	43	42	42	42	34	23	26
	+ 750	51	39	35	33	36	33	23	26
	+ 1250	56	51	45	43	45	47	39	29

GN correction chart at right must be used to correct GN to other face areas. →

Face Area (sq.ft.)	2.5	5	10	20	40	80
dB	-3	0	+3	+6	+9	+12

Cross Section Sizes*

"A" dimension (in.)
14
27-28
54-57
81-86
108-115
135-144
162-173
189-202
216-231

"B" dimension
ANY SIZE

Approx. weight
6.0 lbs/cu.ft.

See Rectangular Silencer Cross-Section Dimensions to ensure selection matches ductwork dimensions.

CERTIFIED PERFORMANCE DATA

VIBRO-ACOUSTICS®
A Swegon Group company

RD-MV-F3

Rectangular Dissipative
Medium velocity silencer
(<1250 fpm)

How to Specify Example:

25 X **21** **RD-MV-F3** X **60**

Duct Width | Duct Height | Silencer Model | Silencer Length

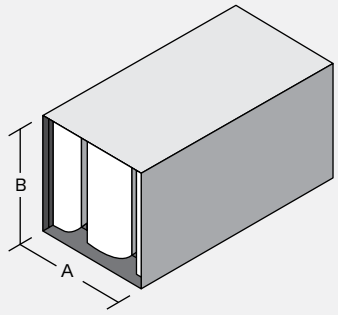

Insertion Loss (IL)

+ : "forward flow" where noise & airflow move in same direction (e.g. supply side)

- : "reverse flow" where noise & airflow move in opposite directions (e.g. return side)

See Silencer Selection Instructions. DIL above 50dB may be limited due to noise flanking around the silencer or along the duct walls. If more than 50dB DIL is required, contact your local Vibro-Acoustics representative or call **1-800-565-8401**.

Length (in.)	Face Velocity (ft. per min)	Octave Band - Hz/Dynamic Insertion Loss (dB)							
		63	125	250	500	1000	2000	4000	8000
36	- 1250	4	8	13	18	18	14	11	9
	0	4	7	13	17	18	14	11	9
	+ 1250	4	7	12	16	18	15	12	9
60	- 1250	5	12	21	29	29	21	15	11
	0	5	11	20	28	28	21	14	12
	+ 1250	4	10	19	26	29	22	16	12
84	- 1250	11	17	27	40	40	27	17	13
	0	10	15	25	39	39	27	17	14
	+ 1250	9	13	24	37	40	29	19	14
108	- 1250	12	21	34	42	50	32	19	14
	0	10	19	32	45	50	32	20	15
	+ 1250	9	17	31	43	50	34	22	16

Pressure Drop (PD)

Pressure drops are reported in accordance with ASTM E477 methods and are based upon **ideal** flow conditions (5 diameters of straight duct on silencer inlet and 10 on outlet). Less than ideal conditions will result in an increase in pressure drop due to System Effects. See Silencer System Effects Data.

Length (in.)	Face Velocity (ft. per min) / Pressure Drop (in.w.g.)						
	500	750	1000	1250	1500	1750	2000
36	0.03	0.06	0.11	0.17	0.25	0.34	0.44
60	0.04	0.09	0.15	0.24	0.34	0.47	0.61
84	0.05	0.10	0.18	0.28	0.41	0.55	0.72
108	0.05	0.12	0.21	0.34	0.48	0.66	0.86

☐ Acceptable (0 - 0.35") ☐ Caution (>0.35") Pressure Drop may be too high for certain applications

Generated Noise (GN)

@ 5 sq.ft. face area

Length (in.)	Face Velocity (ft. per min)	Octave Band - Hz/Generated Noise (dB re 10^{-12} watts)							
		63	125	250	500	1K	2K	4K	8K
All	- 1250	53	50	48	50	52	51	41	29
	- 750	50	43	43	43	42	35	23	26
	+ 750	51	39	35	33	35	32	22	26
	+ 1250	56	51	44	42	45	47	39	29

GN correction chart at right must be used to correct GN to other face areas. →

Face Area (sq.ft.)	2.5	5	10	20	40	80
dB	-3	0	+3	+6	+9	+12

Cross Section Sizes*
"A" dimension (in.)
13
25-26
50-53
75-80
100-107
125-134
150-161
175-188
200-215
225-240
"B" dimension
ANY SIZE
Approx. weight
6.1 lbs/cu.ft.
See Rectangular Silencer Cross-Section Dimensions to ensure selection matches ductwork dimensions.

CERTIFIED PERFORMANCE DATA

VIBRO-ACOUSTICS®
A Swegon Group company

RD-MV-F4

Rectangular Dissipative
Medium velocity silencer
(<1250 fpm)

How to Specify Example:

47 X **22** **RD-MV-F4** X **60**

Duct Width | Duct Height | Silencer Model | Silencer Length

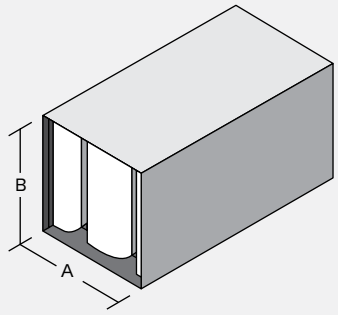

Insertion Loss (IL)

+ : "forward flow" where noise & airflow move in same direction (e.g. supply side)

- : "reverse flow" where noise & airflow move in opposite directions (e.g. return side)

See Silencer Selection Instructions. DIL above 50dB may be limited due to noise flanking around the silencer or along the duct walls. If more than 50dB DIL is required, contact your local Vibro-Acoustics representative or call **1-800-565-8401**.

Length (in.)	Face Velocity (ft. per min)	Octave Band - Hz/Dynamic Insertion Loss (dB)							
		63	125	250	500	1000	2000	4000	8000
36	- 1250	4	7	13	19	18	14	10	7
	0	4	7	12	18	18	14	10	8
	+ 1250	4	6	11	17	18	14	11	8
60	- 1250	4	12	20	32	30	21	14	10
	0	4	10	19	30	30	22	13	11
	+ 1250	4	9	18	29	30	23	15	11
84	- 1250	12	16	26	43	41	27	16	11
	0	11	14	24	42	41	29	17	13
	+ 1250	10	13	23	40	42	31	19	13
108	- 1250	12	21	32	42	52	33	19	12
	0	10	19	31	46	52	34	19	14
	+ 1250	9	17	29	46	53	36	21	15

Pressure Drop (PD)

Pressure drops are reported in accordance with ASTM E477 methods and are based upon **ideal** flow conditions (5 diameters of straight duct on silencer inlet and 10 on outlet). Less than ideal conditions will result in an increase in pressure drop due to System Effects. See Silencer System Effects Data.

Length (in.)	Face Velocity (ft. per min) / Pressure Drop (in.w.g.)						
	500	750	1000	1250	1500	1750	2000
36	0.03	0.06	0.10	0.16	0.23	0.31	0.40
60	0.04	0.08	0.14	0.22	0.32	0.43	0.56
84	0.04	0.09	0.16	0.25	0.36	0.49	0.64
108	0.05	0.11	0.19	0.30	0.43	0.58	0.76

☐ Acceptable (0 - 0.35") ☐ Caution (>0.35") Pressure Drop may be too high for certain applications

Generated Noise (GN)

@ 5 sq.ft. face area

Length (in.)	Face Velocity (ft. per min)	Octave Band - Hz/Generated Noise (dB re 10^{-12} watts)							
		63	125	250	500	1K	2K	4K	8K
All	- 1250	53	50	48	50	52	52	42	29
	- 750	50	43	43	43	43	35	23	26
	+ 750	51	39	35	33	35	31	22	26
	+ 1250	56	51	44	42	45	46	39	29

GN correction chart at right must be used to correct GN to other face areas. →

Face Area (sq.ft.)	2.5	5	10	20	40	80
dB	-3	0	+3	+6	+9	+12

Cross Section Sizes*

"A" dimension (in.)
12
23-24
46-49
69-74
92-99
115-124
138-149
161-174
184-199
207-224
230-240

"B" dimension
ANY SIZE

Approx. weight
6.3 lbs/cu.ft.

See Rectangular Silencer Cross-Section Dimensions to ensure selection matches ductwork dimensions.

CERTIFIED PERFORMANCE DATA

VIBRO-ACOUSTICS®
A Swegon Group company

RD-MV-F5

Rectangular Dissipative
Medium velocity silencer
(<1250 fpm)

How to Specify Example:

44 X **22** **RD-MV-F5** X **60**

Duct Width | Duct Height | Silencer Model | Silencer Length

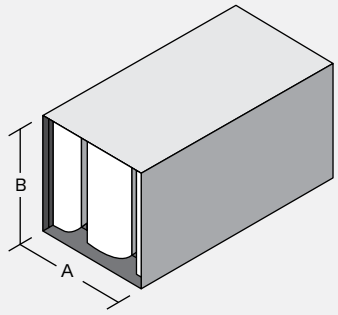

Insertion Loss (IL)

+ : "forward flow" where noise & airflow move in same direction (e.g. supply side)

- : "reverse flow" where noise & airflow move in opposite directions (e.g. return side)

See Silencer Selection Instructions. DIL above 50dB may be limited due to noise flanking around the silencer or along the duct walls. If more than 50dB DIL is required, contact your local Vibro-Acoustics representative or call **1-800-565-8401**.

Length (in.)	Face Velocity (ft. per min)	Octave Band - Hz/Dynamic Insertion Loss (dB)							
		63	125	250	500	1000	2000	4000	8000
36	- 1250	4	7	13	19	21	16	11	7
	0	4	7	12	18	21	16	11	9
	+ 1250	4	6	11	17	21	16	12	8
60	- 1250	4	11	20	31	34	25	16	11
	0	4	10	19	30	34	26	16	12
	+ 1250	3	9	17	28	34	27	18	12
84	- 1250	12	17	25	43	44	32	20	13
	0	10	15	24	42	44	34	21	15
	+ 1250	9	13	22	40	44	36	23	16
108	- 1250	12	21	31	42	52	36	22	13
	0	10	19	30	46	53	38	23	15
	+ 1250	8	17	28	45	54	40	25	17

Pressure Drop (PD)

Pressure drops are reported in accordance with ASTM E477 methods and are based upon **ideal** flow conditions (5 diameters of straight duct on silencer inlet and 10 on outlet). Less than ideal conditions will result in an increase in pressure drop due to System Effects. See Silencer System Effects Data.

Length (in.)	Face Velocity (ft. per min) / Pressure Drop (in.w.g.)						
	500	750	1000	1250	1500	1750	2000
36	0.03	0.06	0.10	0.16	0.23	0.31	0.41
60	0.04	0.08	0.15	0.23	0.33	0.45	0.59
84	0.05	0.10	0.19	0.29	0.42	0.57	0.74
108	0.05	0.11	0.20	0.31	0.45	0.61	0.80

☐ Acceptable (0 - 0.35") ☐ Caution (>0.35") Pressure Drop may be too high for certain applications

Generated Noise (GN)

@ 5 sq.ft. face area

Length (in.)	Face Velocity (ft. per min)	Octave Band - Hz/Generated Noise (dB re 10^{-12} watts)							
		63	125	250	500	1K	2K	4K	8K
All	- 1250	53	50	47	49	52	52	42	30
	- 750	50	43	43	44	43	36	24	26
	+ 750	51	40	35	33	34	31	22	26
	+ 1250	56	51	44	42	44	46	39	28

GN correction chart at right must be used to correct GN to other face areas. →

Face Area (sq.ft.)	2.5	5	10	20	40	80
dB	-3	0	+3	+6	+9	+12

Cross Section Sizes*
"A" dimension (in.)
11
21-22
42-45
63-68
84-91
105-114
126-137
147-160
168-183
189-206
210-229
231-240
"B" dimension
ANY SIZE
Approx. weight
6.1 lbs/cu.ft.
See Rectangular Silencer Cross-Section Dimensions to ensure selection matches ductwork dimensions.

CERTIFIED PERFORMANCE DATA

VIBRO-ACOUSTICS®
A Swegon Group company

RD-MV-F6

Rectangular Dissipative
Medium velocity silencer
(<1250 fpm)

How to Specify Example:

40 X **21** **RD-MV-F6** X **60**

Duct Width	Duct Height	Silencer Model	Silencer Length

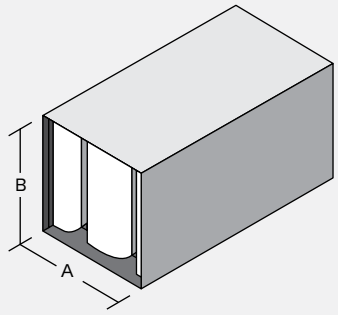

Insertion Loss (IL)

+ : "forward flow" where noise & airflow move in same direction (e.g. supply side)

- : "reverse flow" where noise & airflow move in opposite directions (e.g. return side)

See Silencer Selection Instructions. DIL above 50dB may be limited due to noise flanking around the silencer or along the duct walls. If more than 50dB DIL is required, contact your local Vibro-Acoustics representative or call **1-800-565-8401**.

Length (in.)	Face Velocity (ft. per min)	Octave Band - Hz/Dynamic Insertion Loss (dB)							
		63	125	250	500	1000	2000	4000	8000
36	- 1250	4	7	12	19	24	18	12	8
	0	4	6	11	18	24	18	12	9
	+ 1250	3	6	10	17	23	18	13	9
60	- 1250	4	11	19	31	38	28	18	11
	0	4	10	18	30	38	29	18	13
	+ 1250	3	9	16	28	38	31	20	13
84	- 1250	12	17	25	44	47	36	23	14
	0	10	15	23	42	46	39	24	17
	+ 1250	9	13	22	40	47	40	27	18
108	- 1250	11	20	30	42	52	39	25	14
	0	10	19	28	46	54	42	27	17
	+ 1250	8	17	27	45	55	44	30	20

Pressure Drop (PD)

Pressure drops are reported in accordance with ASTM E477 methods and are based upon **ideal** flow conditions (5 diameters of straight duct on silencer inlet and 10 on outlet). Less than ideal conditions will result in an increase in pressure drop due to System Effects. See Silencer System Effects Data.

Length (in.)	Face Velocity (ft. per min) / Pressure Drop (in.w.g.)						
	500	750	1000	1250	1500	1750	2000
36	0.03	0.06	0.10	0.16	0.23	0.32	0.41
60	0.04	0.09	0.16	0.24	0.35	0.48	0.63
84	0.05	0.12	0.21	0.33	0.47	0.64	0.84
108	0.05	0.12	0.21	0.33	0.47	0.64	0.84

☐ Acceptable (0 - 0.35") ☐ Caution (>0.35") Pressure Drop may be too high for certain applications

Generated Noise (GN)

@ 5 sq.ft. face area

Length (in.)	Face Velocity (ft. per min)	Octave Band - Hz/Generated Noise (dB re 10^{-12} watts)							
		63	125	250	500	1K	2K	4K	8K
All	- 1250	53	50	47	49	52	53	43	30
	- 750	50	43	43	45	43	36	24	26
	+ 750	51	40	35	33	33	30	22	26
	+ 1250	56	51	44	42	44	46	38	28

GN correction chart at right must be used to correct GN to other face areas. →

Face Area (sq.ft.)	2.5	5	10	20	40	80
dB	-3	0	+3	+6	+9	+12

Cross Section Sizes*

"A" dimension (in.)
10
19-20
38-41
57-62
76-83
95-104
114-125
133-146
152-167
171-188
190-240

"B" dimension
ANY SIZE

Approx. weight
6.2 lbs/cu.ft.

See Rectangular Silencer Cross-Section Dimensions to ensure selection matches ductwork dimensions.

CERTIFIED PERFORMANCE DATA

VIBRO-ACOUSTICS®
A Swegon Group company

RD-MV-F7

Rectangular Dissipative
Medium velocity silencer
(<1250 fpm)

How to Specify Example:

37 X **21** **RD-MV-F7** X **60**

Duct Width	Duct Height	Silencer Model	Silencer Length

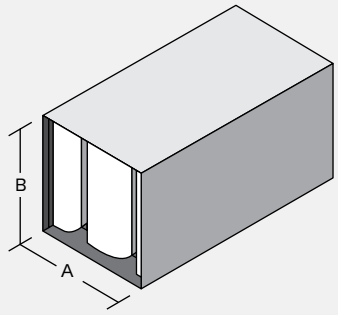

Insertion Loss (IL)

+ : "forward flow" where noise & airflow move in same direction (e.g. supply side)

- : "reverse flow" where noise & airflow move in opposite directions (e.g. return side)

See Silencer Selection Instructions. DIL above 50dB may be limited due to noise flanking around the silencer or along the duct walls. If more than 50dB DIL is required, contact your local Vibro-Acoustics representative or call **1-800-565-8401**.

Length (in.)	Face Velocity (ft. per min)	Octave Band - Hz/Dynamic Insertion Loss (dB)							
		63	125	250	500	1000	2000	4000	8000
36	- 1250	4	6	15	23	25	19	13	8
	0	4	5	13	22	25	19	13	10
	+ 1250	3	5	12	21	24	19	14	10
60	- 1250	4	10	23	37	39	30	19	12
	0	3	8	21	36	39	32	20	14
	+ 1250	3	8	20	34	39	33	22	15
84	- 1250	12	15	32	53	47	39	26	16
	0	10	14	30	51	46	42	28	19
	+ 1250	9	12	27	49	47	43	30	21
108	- 1250	11	18	37	50	50	40	28	16
	0	9	17	35	55	52	45	30	19
	+ 1250	8	15	33	53	53	46	33	22

Pressure Drop (PD)

Pressure drops are reported in accordance with ASTM E477 methods and are based upon **ideal** flow conditions (5 diameters of straight duct on silencer inlet and 10 on outlet). Less than ideal conditions will result in an increase in pressure drop due to System Effects. See Silencer System Effects Data.

Length (in.)	Face Velocity (ft. per min) / Pressure Drop (in.w.g.)						
	500	750	1000	1250	1500	1750	2000
36	0.03	0.06	0.11	0.16	0.24	0.32	0.42
60	0.04	0.09	0.17	0.26	0.37	0.51	0.66
84	0.06	0.13	0.24	0.37	0.53	0.72	0.94
108	0.06	0.12	0.22	0.34	0.50	0.67	0.88

☐ Acceptable (0 - 0.35") ☐ Caution (>0.35") Pressure Drop may be too high for certain applications

Generated Noise (GN)

@ 5 sq.ft. face area

Length (in.)	Face Velocity (ft. per min)	Octave Band - Hz/Generated Noise (dB re 10^{-12} watts)							
		63	125	250	500	1K	2K	4K	8K
All	- 1250	53	50	47	49	52	54	43	31
	- 750	50	42	43	45	44	37	24	26
	+ 750	51	40	35	33	32	29	22	26
	+ 1250	56	51	43	42	44	45	38	28

GN correction chart at right must be used to correct GN to other face areas. →

Face Area (sq.ft.)	2.5	5	10	20	40	80
dB	-3	0	+3	+6	+9	+12

Cross Section Sizes*
"A" dimension (in.)
9
17-18
33-37
50-56
66-75
83-94
99-113
116-240
"B" dimension
ANY SIZE
Approx. weight
6.3 lbs/cu.ft.
See Rectangular Silencer Cross-Section Dimensions to ensure selection matches ductwork dimensions.

CERTIFIED PERFORMANCE DATA

VIBRO-ACOUSTICS®
A Swegon Group company

RD-MV-F8

Rectangular Dissipative
Medium velocity silencer
(<1250 fpm)

How to Specify Example:

14 X **22** **RD-MV-F8** X **60**

Duct Width	Duct Height	Silencer Model	Silencer Length

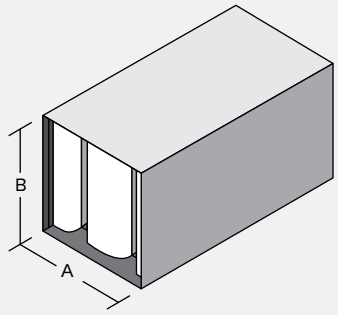

Insertion Loss (IL)

+ : "forward flow" where noise & airflow move in same direction (e.g. supply side)

- : "reverse flow" where noise & airflow move in opposite directions (e.g. return side)

See Silencer Selection Instructions. DIL above 50dB may be limited due to noise flanking around the silencer or along the duct walls. If more than 50dB DIL is required, contact your local Vibro-Acoustics representative or call **1-800-565-8401**.

Length (in.)	Face Velocity (ft. per min)	Octave Band - Hz/Dynamic Insertion Loss (dB)							
		63	125	250	500	1000	2000	4000	8000
36	- 1250	4	7	13	22	25	21	17	15
	0	2	5	12	21	25	21	17	14
	+ 1250	2	5	11	20	24	21	17	14
60	- 1250	6	11	21	35	37	32	22	17
	0	5	9	20	33	37	33	23	19
	+ 1250	5	9	18	32	37	34	24	18
84	- 1250	9	15	30	47	49	43	28	20
	0	7	14	27	46	49	46	30	23
	+ 1250	7	12	25	44	49	46	30	22
108	- 1250	12	20	38	55	55	54	33	23
	0	10	18	35	55	55	55	36	27
	+ 1250	9	15	32	55	55	55	37	27

Pressure Drop (PD)

Pressure drops are reported in accordance with ASTM E477 methods and are based upon **ideal** flow conditions (5 diameters of straight duct on silencer inlet and 10 on outlet). Less than ideal conditions will result in an increase in pressure drop due to System Effects. See Silencer System Effects Data.

Length (in.)	Face Velocity (ft. per min) / Pressure Drop (in.w.g.)						
	500	750	1000	1250	1500	1750	2000
36	0.04	0.09	0.16	0.24	0.35	0.47	0.62
60	0.05	0.12	0.21	0.33	0.47	0.64	0.83
84	0.07	0.15	0.26	0.41	0.59	0.80	1.05
108	0.08	0.18	0.32	0.49	0.71	0.97	1.26

☐ Acceptable (0 - 0.35") ☐ Caution (>0.35") Pressure Drop may be too high for certain applications

Generated Noise (GN)

@ 5 sq.ft. face area

Length (in.)	Face Velocity (ft. per min)	Octave Band - Hz/Generated Noise (dB re 10^{-12} watts)							
		63	125	250	500	1K	2K	4K	8K
All	- 1250	53	50	47	49	52	54	43	31
	- 750	50	42	43	45	44	37	24	26
	+ 750	51	40	35	33	32	29	22	26
	+ 1250	56	51	43	42	44	45	38	28

GN correction chart at right must be used to correct GN to other face areas. →

Face Area (sq.ft.)	2.5	5	10	20	40	80
dB	-3	0	+3	+6	+9	+12

Cross Section Sizes*
"A" dimension (in.) 7-8 14-16 27-32 41-49 54-65 68-240
"B" dimension ANY SIZE
Approx. weight 6.5 lbs/cu.ft.
See Rectangular Silencer Cross-Section Dimensions to ensure selection matches ductwork dimensions.

RD-MV-F9

Rectangular Dissipative
Medium velocity silencer
(<1250 fpm)

How to Specify Example:

21 X **21** **RD-MV-F9** X **60**

Duct Width	Duct Height	Silencer Model	Silencer Length

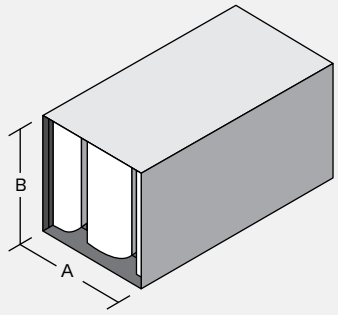

Insertion Loss (IL)

+ : "forward flow" where noise & airflow move in same direction (e.g. supply side)

- : "reverse flow" where noise & airflow move in opposite directions (e.g. return side)

See Silencer Selection Instructions. DIL above 50dB may be limited due to noise flanking around the silencer or along the duct walls. If more than 50dB DIL is required, contact your local Vibro-Acoustics representative or call **1-800-565-8401**.

Length (in.)	Face Velocity (ft. per min)	Octave Band - Hz/Dynamic Insertion Loss (dB)							
		63	125	250	500	1000	2000	4000	8000
36	- 1250	4	6	13	23	33	24	15	10
	0	3	5	11	22	33	24	16	11
	+ 1250	3	4	10	21	32	25	17	12
60	- 1250	4	10	20	37	50	40	24	14
	0	3	8	18	35	50	42	26	17
	+ 1250	2	7	16	33	50	43	28	19
84	- 1250	12	16	32	53	55	52	36	21
	0	9	14	29	51	53	55	39	25
	+ 1250	8	12	26	49	54	55	42	28
108	- 1250	10	18	33	49	50	49	37	20
	0	9	16	30	54	55	55	42	25
	+ 1250	7	14	28	51	55	55	46	29

Pressure Drop (PD)

Pressure drops are reported in accordance with ASTM E477 methods and are based upon **ideal** flow conditions (5 diameters of straight duct on silencer inlet and 10 on outlet). Less than ideal conditions will result in an increase in pressure drop due to System Effects. See Silencer System Effects Data.

Length (in.)	Face Velocity (ft. per min) / Pressure Drop (in.w.g.)						
	500	750	1000	1250	1500	1750	2000
36	0.03	0.06	0.11	0.17	0.25	0.34	0.44
60	0.05	0.11	0.19	0.30	0.43	0.58	0.76
84	0.08	0.17	0.31	0.48	0.70	0.95	1.24
108	0.06	0.14	0.25	0.39	0.56	0.77	1.00

☐ Acceptable (0 - 0.35") ☐ Caution (>0.35") Pressure Drop may be too high for certain applications

Cross Section Sizes*
"A" dimension (in.) 6 10-13 20-26 30-240
"B" dimension ANY SIZE
Approx. weight 6.8 lbs/cu.ft.

See Rectangular Silencer Cross-Section Dimensions to ensure selection matches ductwork dimensions.

Generated Noise (GN)

@ 5 sq.ft. face area

Length (in.)	Face Velocity (ft. per min)	Octave Band - Hz/Generated Noise (dB re 10^{-12} watts)							
		63	125	250	500	1K	2K	4K	8K
All	- 1250	54	51	46	49	52	56	45	32
	- 750	49	42	43	48	45	38	25	26
	+ 750	51	40	34	33	29	27	21	26
	+ 1250	56	50	43	42	43	44	37	28

GN correction chart at right must be used to correct GN to other face areas. →

Face Area (sq.ft.)	2.5	5	10	20	40	80
dB	-3	0	+3	+6	+9	+12

CERTIFIED PERFORMANCE DATA

VIBRO-ACOUSTICS®
A Swegon Group company

RD-HV-F1

Rectangular Dissipative
High velocity silencer
(<2000 fpm)

How to Specify Example:

32 X **21** **RD-HV-F1** X **60**

Duct Width	Duct Height	Silencer Model	Silencer Length

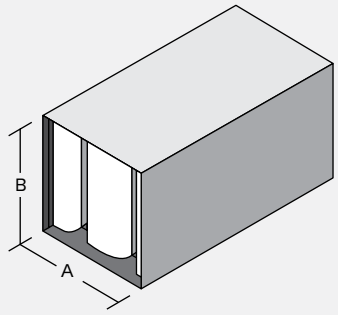

Insertion Loss (IL)

+ : "forward flow" where noise & airflow move in same direction (e.g. supply side)

- : "reverse flow" where noise & airflow move in opposite directions (e.g. return side)

See Silencer Selection Instructions. DIL above 50dB may be limited due to noise flanking around the silencer or along the duct walls. If more than 50dB DIL is required, contact your local Vibro-Acoustics representative or call **1-800-565-8401**.

Length (in.)	Face Velocity (ft. per min)	Octave Band - Hz/Dynamic Insertion Loss (dB)							
		63	125	250	500	1000	2000	4000	8000
36	- 2000	3	8	11	12	14	13	12	10
	0	3	6	10	11	12	11	10	8
	+ 2000	2	5	9	11	13	11	10	8
60	- 2000	5	11	17	19	19	16	14	11
	0	4	9	16	18	18	14	12	11
	+ 2000	4	8	14	17	19	15	13	10
84	- 2000	7	15	23	26	25	19	15	13
	0	5	12	22	24	23	17	15	13
	+ 2000	5	11	20	23	25	18	16	13
108	- 2000	8	19	29	33	31	22	17	14
	0	7	16	27	31	29	20	17	15
	+ 2000	7	14	25	29	30	21	18	15

Pressure Drop (PD)

Pressure drops are reported in accordance with ASTM E477 methods and are based upon **ideal** flow conditions (5 diameters of straight duct on silencer inlet and 10 on outlet). Less than ideal conditions will result in an increase in pressure drop due to System Effects. See Silencer System Effects Data.

Length (in.)	Face Velocity (ft. per min) / Pressure Drop (in.w.g.)						
	500	1000	1500	1750	2000	2250	2500
36	0.01	0.04	0.09	0.12	0.16	0.20	0.25
60	0.01	0.06	0.12	0.17	0.22	0.28	0.34
84	0.02	0.07	0.16	0.21	0.28	0.35	0.44
108	0.02	0.09	0.19	0.26	0.34	0.43	0.53

☐ Acceptable (0 - 0.35") ☐ Caution (>0.35") Pressure Drop may be too high for certain applications

Generated Noise (GN)

@ 5 sq.ft. face area

Length (in.)	Face Velocity (ft. per min)	Octave Band - Hz/Generated Noise (dB re 10^{-12} watts)							
		63	125	250	500	1K	2K	4K	8K
All	- 2000	58	55	54	54	54	56	48	38
	- 1250	54	49	47	46	46	43	32	27
	+ 1250	57	47	40	39	41	39	28	26
	+ 2000	60	55	50	48	49	52	45	33

GN correction chart at right must be used to correct GN to other face areas. →

Face Area (sq.ft.)	2.5	5	10	20	40	80
dB	-3	0	+3	+6	+9	+12

Cross Section Sizes*

"A" dimension (in.)
15-16
29-32
58-64
87-96
116-128
145-160
174-192
203-224
232-240

"B" dimension
ANY SIZE

Approx. weight
5.5 lbs/cu.ft.

See Rectangular Silencer Cross-Section Dimensions to ensure selection matches ductwork dimensions.

CERTIFIED PERFORMANCE DATA

VIBRO-ACOUSTICS®
A Swegon Group company

RD-HV-F2

Rectangular Dissipative
High velocity silencer
(<2000 fpm)

How to Specify Example:

27 X **22** **RD-HV-F2** X **60**

- 27 — Duct Width
- 22 — Duct Height
- RD-HV-F2 — Silencer Model
- 60 — Silencer Length

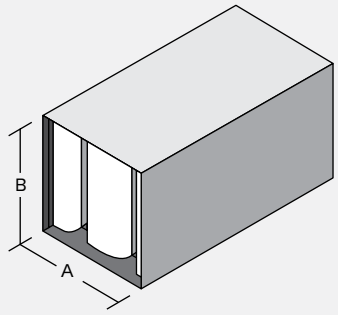

Insertion Loss (IL)

+ : "forward flow" where noise & airflow move in same direction (e.g. supply side)

- : "reverse flow" where noise & airflow move in opposite directions (e.g. return side)

See Silencer Selection Instructions. DIL above 50dB may be limited due to noise flanking around the silencer or along the duct walls. If more than 50dB DIL is required, contact your local Vibro-Acoustics representative or call **1-800-565-8401**.

Length (in.)	Face Velocity (ft. per min)	Octave Band - Hz/Dynamic Insertion Loss (dB)							
		63	125	250	500	1000	2000	4000	8000
36	- 2000	4	7	11	13	14	12	11	8
	0	3	6	10	12	13	11	9	8
	+ 2000	2	5	9	12	13	11	10	7
60	- 2000	5	10	16	22	20	16	13	10
	0	4	8	15	20	19	15	12	10
	+ 2000	3	7	14	19	19	15	13	10
84	- 2000	7	15	22	29	27	20	15	11
	0	6	12	21	27	26	18	14	12
	+ 2000	5	10	19	26	27	20	15	12
108	- 2000	8	19	28	36	33	23	16	13
	0	6	15	27	34	32	21	16	14
	+ 2000	6	13	25	32	34	23	17	14

Pressure Drop (PD)

Pressure drops are reported in accordance with ASTM E477 methods and are based upon **ideal** flow conditions (5 diameters of straight duct on silencer inlet and 10 on outlet). Less than ideal conditions will result in an increase in pressure drop due to System Effects. See Silencer System Effects Data.

Length (in.)	Face Velocity (ft. per min) / Pressure Drop (in.w.g.)						
	500	1000	1500	1750	2000	2250	2500
36	0.01	0.04	0.09	0.12	0.16	0.20	0.25
60	0.01	0.05	0.12	0.16	0.21	0.27	0.33
84	0.02	0.07	0.16	0.21	0.28	0.35	0.44
108	0.02	0.08	0.18	0.25	0.32	0.41	0.50

☐ Acceptable (0 - 0.35") ☐ Caution (>0.35") Pressure Drop may be too high for certain applications

Cross Section Sizes*
"A" dimension (in.)
14
27-28
54-57
81-86
108-115
135-144
162-173
189-202
216-231
"B" dimension
ANY SIZE
Approx. weight
5.4 lbs/cu.ft.

See Rectangular Silencer Cross-Section Dimensions to ensure selection matches ductwork dimensions.

Generated Noise (GN)

@ 5 sq.ft. face area

Length (in.)	Face Velocity (ft. per min)	Octave Band - Hz/Generated Noise (dB re 10^{-12} watts)							
		63	125	250	500	1K	2K	4K	8K
All	- 2000	57	56	54	54	55	56	49	38
	- 1250	53	49	47	46	47	44	32	27
	+ 1250	56	48	41	39	41	40	28	26
	+ 2000	59	56	50	49	49	52	46	34

GN correction chart at right must be used to correct GN to other face areas. →

Face Area (sq.ft.)	2.5	5	10	20	40	80
dB	-3	0	+3	+6	+9	+12

CERTIFIED PERFORMANCE DATA

VIBRO-ACOUSTICS®
A Swegon Group company

RD-HV-F3

Rectangular Dissipative
High velocity silencer
(<2000 fpm)

How to Specify Example:

25 X **21** **RD-HV-F3** X **60**

Duct Width	Duct Height	Silencer Model	Silencer Length

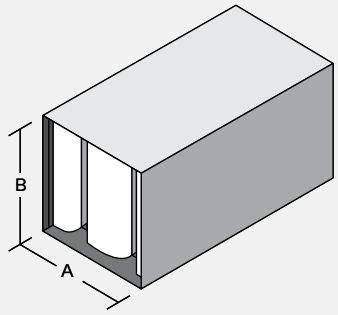

Insertion Loss (IL)

+ : "forward flow" where noise & airflow move in same direction (e.g. supply side)

- : "reverse flow" where noise & airflow move in opposite directions (e.g. return side)

See Silencer Selection Instructions. DIL above 50dB may be limited due to noise flanking around the silencer or along the duct walls. If more than 50dB DIL is required, contact your local Vibro-Acoustics representative or call **1-800-565-8401**.

Length (in.)	Face Velocity (ft. per min)	Octave Band - Hz/Dynamic Insertion Loss (dB)							
		63	125	250	500	1000	2000	4000	8000
36	- 2000	4	6	10	14	14	12	10	7
	0	3	5	9	14	14	11	8	7
	+ 2000	3	5	8	13	14	11	9	6
60	- 2000	4	9	15	24	20	15	12	9
	0	4	7	14	23	20	15	11	10
	+ 2000	3	6	13	22	20	16	12	9
84	- 2000	7	15	22	32	30	20	14	10
	0	6	12	20	30	28	20	13	11
	+ 2000	6	10	19	28	29	22	15	11
108	- 2000	7	18	27	40	36	23	16	12
	0	6	15	26	38	35	23	15	13
	+ 2000	5	13	24	36	37	25	16	13

Pressure Drop (PD)

Pressure drops are reported in accordance with ASTM E477 methods and are based upon **ideal** flow conditions (5 diameters of straight duct on silencer inlet and 10 on outlet). Less than ideal conditions will result in an increase in pressure drop due to System Effects. See Silencer System Effects Data.

Length (in.)	Face Velocity (ft. per min) / Pressure Drop (in.w.g.)						
	500	1000	1500	1750	2000	2250	2500
36	0.01	0.04	0.09	0.12	0.16	0.20	0.25
60	0.01	0.05	0.12	0.16	0.21	0.26	0.32
84	0.02	0.07	0.16	0.21	0.28	0.35	0.44
108	0.02	0.08	0.17	0.23	0.30	0.38	0.47

☐ Acceptable (0 - 0.35") ☐ Caution (>0.35") Pressure Drop may be too high for certain applications

Generated Noise (GN)

@ 5 sq.ft. face area

Length (in.)	Face Velocity (ft. per min)	Octave Band - Hz/Generated Noise (dB re 10^{-12} watts)							
		63	125	250	500	1K	2K	4K	8K
All	- 2000	56	56	55	54	55	56	49	38
	- 1250	53	49	47	47	47	44	32	26
	+ 1250	56	48	41	39	41	40	29	26
	+ 2000	59	57	51	49	49	53	47	36

GN correction chart at right must be used to correct GN to other face areas. →

Face Area (sq.ft.)	2.5	5	10	20	40	80
dB	-3	0	+3	+6	+9	+12

Cross Section Sizes*

"A" dimension (in.)
13
25-26
50-53
75-80
100-107
125-134
150-161
175-188
200-215
225-240

"B" dimension
ANY SIZE

Approx. weight
5.6 lbs/cu.ft.

See Rectangular Silencer Cross-Section Dimensions to ensure selection matches ductwork dimensions.

CERTIFIED PERFORMANCE DATA

VIBRO-ACOUSTICS®
A Swegon Group company

RD-HV-F4

Rectangular Dissipative
High velocity silencer
(<2000 fpm)

How to Specify Example:

47 X **22** **RD-HV-F4** X **60**

- 47: Duct Width
- 22: Duct Height
- RD-HV-F4: Silencer Model
- 60: Silencer Length

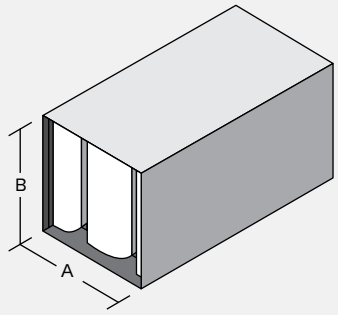

Insertion Loss (IL)

+ : "forward flow" where noise & airflow move in same direction (e.g. supply side)

- : "reverse flow" where noise & airflow move in opposite directions (e.g. return side)

See Silencer Selection Instructions. DIL above 50dB may be limited due to noise flanking around the silencer or along the duct walls. If more than 50dB DIL is required, contact your local Vibro-Acoustics representative or call **1-800-565-8401**.

Length (in.)	Face Velocity (ft. per min)	Octave Band - Hz/Dynamic Insertion Loss (dB)							
		63	125	250	500	1000	2000	4000	8000
36	- 2000	4	6	10	16	14	11	8	5
	0	3	5	9	15	14	10	7	6
	+ 2000	3	5	8	14	14	11	8	5
60	- 2000	4	8	15	27	21	15	11	7
	0	3	7	13	26	20	15	10	9
	+ 2000	3	6	12	25	21	17	12	8
84	- 2000	7	15	21	35	32	21	14	9
	0	6	12	20	33	31	21	13	10
	+ 2000	6	10	18	31	32	23	15	10
108	- 2000	6	18	27	43	39	24	15	10
	0	5	15	26	41	39	25	14	12
	+ 2000	4	13	24	39	40	26	15	12

Pressure Drop (PD)

Pressure drops are reported in accordance with ASTM E477 methods and are based upon **ideal** flow conditions (5 diameters of straight duct on silencer inlet and 10 on outlet). Less than ideal conditions will result in an increase in pressure drop due to System Effects. See Silencer System Effects Data.

Length (in.)	Face Velocity (ft. per min) / Pressure Drop (in.w.g.)						
	500	1000	1500	1750	2000	2250	2500
36	0.01	0.04	0.09	0.12	0.16	0.20	0.25
60	0.01	0.05	0.11	0.15	0.20	0.25	0.31
84	0.02	0.07	0.16	0.21	0.28	0.35	0.44
108	0.02	0.07	0.16	0.21	0.28	0.35	0.44

☐ Acceptable (0 - 0.35") ☐ Caution (>0.35") Pressure Drop may be too high for certain applications

Cross Section Sizes*
"A" dimension (in.)
12
23-24
46-49
69-74
92-99
115-124
138-149
161-174
184-199
207-224
230-240
"B" dimension
ANY SIZE
Approx. weight
5.7 lbs/cu.ft.
See Rectangular Silencer Cross-Section Dimensions to ensure selection matches ductwork dimensions.

Generated Noise (GN)

@ 5 sq.ft. face area

Length (in.)	Face Velocity (ft. per min)	Octave Band - Hz/Generated Noise (dB re 10^{-12} watts)							
		63	125	250	500	1K	2K	4K	8K
All	- 2000	56	56	55	55	55	57	49	38
	- 1250	53	50	47	47	47	44	32	26
	+ 1250	55	49	42	39	41	40	29	26
	+ 2000	59	58	52	49	49	53	47	37

GN correction chart at right must be used to correct GN to other face areas. →

Face Area (sq.ft.)	2.5	5	10	20	40	80
dB	-3	0	+3	+6	+9	+12

CERTIFIED PERFORMANCE DATA

VIBRO-ACOUSTICS®
A Swegon Group company

RD-HV-F5

Rectangular Dissipative
High velocity silencer
(<2000 fpm)

How to Specify Example:

44 X **22** **RD-HV-F5** X **60**

Duct Width | Duct Height | Silencer Model | Silencer Length

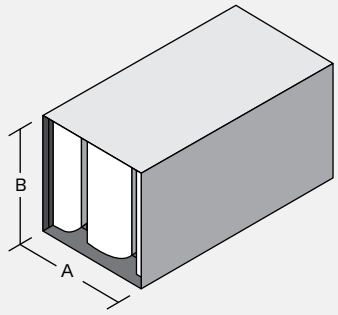

Insertion Loss (IL)

+ : "forward flow" where noise & airflow move in same direction (e.g. supply side)

- : "reverse flow" where noise & airflow move in opposite directions (e.g. return side)

See Silencer Selection Instructions. DIL above 50dB may be limited due to noise flanking around the silencer or along the duct walls. If more than 50dB DIL is required, contact your local Vibro-Acoustics representative or call **1-800-565-8401**.

Length (in.)	Face Velocity (ft. per min)	Octave Band - Hz/Dynamic Insertion Loss (dB)							
		63	125	250	500	1000	2000	4000	8000
36	- 2000	4	6	10	15	17	12	9	6
	0	3	5	9	15	16	12	8	6
	+ 2000	3	5	8	14	16	13	9	6
60	- 2000	4	8	14	26	24	17	12	8
	0	4	6	12	25	24	18	11	9
	+ 2000	3	6	11	23	24	19	13	9
84	- 2000	7	15	21	35	36	26	16	10
	0	7	11	19	33	36	26	15	12
	+ 2000	6	10	18	31	36	28	18	11
108	- 2000	6	17	26	42	42	28	17	11
	0	5	14	24	40	43	29	16	12
	+ 2000	4	13	22	38	43	31	18	13

Pressure Drop (PD)

Pressure drops are reported in accordance with ASTM E477 methods and are based upon **ideal** flow conditions (5 diameters of straight duct on silencer inlet and 10 on outlet). Less than ideal conditions will result in an increase in pressure drop due to System Effects. See Silencer System Effects Data.

Length (in.)	Face Velocity (ft. per min) / Pressure Drop (in.w.g.)						
	500	1000	1500	1750	2000	2250	2500
36	0.01	0.04	0.09	0.12	0.16	0.20	0.25
60	0.01	0.05	0.12	0.16	0.21	0.26	0.32
84	0.02	0.08	0.17	0.23	0.31	0.39	0.48
108	0.02	0.07	0.17	0.22	0.29	0.37	0.46

☐ Acceptable (0 - 0.35") ☐ Caution (>0.35") Pressure Drop may be too high for certain applications

Generated Noise (GN)

@ 5 sq.ft. face area

Length (in.)	Face Velocity (ft. per min)	Octave Band - Hz/Generated Noise (dB re 10^{-12} watts)							
		63	125	250	500	1K	2K	4K	8K
All	- 2000	56	56	55	55	55	57	50	38
	- 1250	53	50	47	47	48	45	32	26
	+ 1250	55	49	42	39	41	40	29	26
	+ 2000	59	58	52	49	49	53	47	37

GN correction chart at right must be used to correct GN to other face areas. →

Face Area (sq.ft.)	2.5	5	10	20	40	80
dB	-3	0	+3	+6	+9	+12

Cross Section Sizes*

"A" dimension (in.)
11
21-22
42-45
63-68
84-91
105-114
126-137
147-160
168-183
189-206
210-229
231-240

"B" dimension
ANY SIZE

Approx. weight
5.5 lbs/cu.ft.

See Rectangular Silencer Cross-Section Dimensions to ensure selection matches ductwork dimensions.

CERTIFIED PERFORMANCE DATA

VIBRO-ACOUSTICS®
A Swegon Group company

RD-HV-F6

Rectangular Dissipative
High velocity silencer
(<2000 fpm)

How to Specify Example:

40 X **21** **RD-HV-F6** X **60**

Duct Width	Duct Height	Silencer Model	Silencer Length

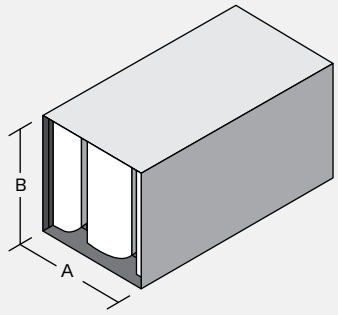

Insertion Loss (IL)

+ : "forward flow" where noise & airflow move in same direction (e.g. supply side)

- : "reverse flow" where noise & airflow move in opposite directions (e.g. return side)

See Silencer Selection Instructions. DIL above 50dB may be limited due to noise flanking around the silencer or along the duct walls. If more than 50dB DIL is required, contact your local Vibro-Acoustics representative or call **1-800-565-8401**.

Length (in.)	Face Velocity (ft. per min)	Octave Band - Hz/Dynamic Insertion Loss (dB)							
		63	125	250	500	1000	2000	4000	8000
36	- 2000	4	6	9	15	19	14	10	6
	0	3	5	8	14	19	13	9	7
	+ 2000	3	4	7	13	18	14	10	6
60	- 2000	4	8	13	25	28	20	13	8
	0	4	6	12	24	27	20	13	10
	+ 2000	3	5	11	22	27	21	15	10
84	- 2000	7	14	21	36	40	30	18	11
	0	7	11	19	34	41	31	18	13
	+ 2000	6	10	17	31	41	33	21	13
108	- 2000	6	17	25	41	45	33	19	12
	0	6	14	23	40	46	34	19	13
	+ 2000	4	12	21	37	47	36	21	15

Pressure Drop (PD)

Pressure drops are reported in accordance with ASTM E477 methods and are based upon **ideal** flow conditions (5 diameters of straight duct on silencer inlet and 10 on outlet). Less than ideal conditions will result in an increase in pressure drop due to System Effects. See Silencer System Effects Data.

Length (in.)	Face Velocity (ft. per min) / Pressure Drop (in.w.g.)						
	500	1000	1500	1750	2000	2250	2500
36	0.01	0.04	0.09	0.12	0.16	0.20	0.25
60	0.01	0.05	0.12	0.16	0.21	0.27	0.33
84	0.02	0.08	0.19	0.26	0.33	0.42	0.52
108	0.02	0.08	0.17	0.23	0.31	0.39	0.48

☐ Acceptable (0 - 0.35") ☐ Caution (>0.35") Pressure Drop may be too high for certain applications

Generated Noise (GN)

@ 5 sq.ft. face area

Length (in.)	Face Velocity (ft. per min)	Octave Band - Hz/Generated Noise (dB re 10^{-12} watts)							
		63	125	250	500	1K	2K	4K	8K
All	- 2000	56	56	55	54	55	57	50	38
	- 1250	53	50	47	47	48	46	33	26
	+ 1250	55	49	42	39	41	40	29	26
	+ 2000	59	58	52	48	48	52	47	37

GN correction chart at right must be used to correct GN to other face areas. →

Face Area (sq.ft.)	2.5	5	10	20	40	80
dB	-3	0	+3	+6	+9	+12

Cross Section Sizes*

"A" dimension (in.)
10
19-20
38-41
57-62
76-83
95-104
114-125
133-146
152-167
171-188
190-240

"B" dimension
ANY SIZE

Approx. weight
5.6 lbs/cu.ft.

See Rectangular Silencer Cross-Section Dimensions to ensure selection matches ductwork dimensions.

CERTIFIED PERFORMANCE DATA

VIBRO-ACOUSTICS®
A Swegon Group company

RD-HV-F7

Rectangular Dissipative
High velocity silencer
(<2000 fpm)

How to Specify Example:

37 X **21** **RD-HV-F7** X **60**

- 37: Duct Width
- 21: Duct Height
- RD-HV-F7: Silencer Model
- 60: Silencer Length

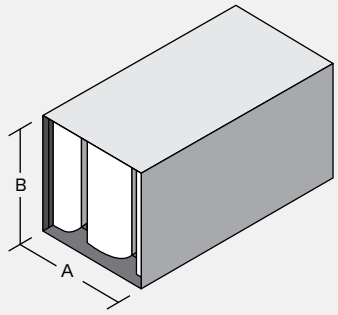

Insertion Loss (IL)

+ : "forward flow" where noise & airflow move in same direction (e.g. supply side)

- : "reverse flow" where noise & airflow move in opposite directions (e.g. return side)

See Silencer Selection Instructions. DIL above 50dB may be limited due to noise flanking around the silencer or along the duct walls. If more than 50dB DIL is required, contact your local Vibro-Acoustics representative or call **1-800-565-8401**.

Length (in.)	Face Velocity (ft. per min)	Octave Band - Hz/Dynamic Insertion Loss (dB)							
		63	125	250	500	1000	2000	4000	8000
36	- 2000	4	5	11	18	20	15	10	7
	0	3	4	10	17	20	14	9	7
	+ 2000	3	4	9	16	19	15	11	7
60	- 2000	4	7	16	29	30	21	13	9
	0	4	5	14	27	29	21	13	11
	+ 2000	3	5	13	26	29	23	16	11
84	- 2000	7	13	27	43	42	33	20	12
	0	7	10	24	41	43	34	20	14
	+ 2000	6	8	21	38	43	36	23	15
108	- 2000	6	15	30	49	46	35	21	13
	0	6	12	27	47	47	37	21	14
	+ 2000	4	11	25	44	48	39	24	16

Pressure Drop (PD)

Pressure drops are reported in accordance with ASTM E477 methods and are based upon **ideal** flow conditions (5 diameters of straight duct on silencer inlet and 10 on outlet). Less than ideal conditions will result in an increase in pressure drop due to System Effects. See Silencer System Effects Data.

Length (in.)	Face Velocity (ft. per min) / Pressure Drop (in.w.g.)						
	500	1000	1500	1750	2000	2250	2500
36	0.01	0.04	0.09	0.12	0.16	0.20	0.25
60	0.01	0.06	0.12	0.17	0.22	0.28	0.34
84	0.02	0.09	0.20	0.28	0.36	0.46	0.56
108	0.02	0.08	0.18	0.25	0.32	0.41	0.50

☐ Acceptable (0 - 0.35") ☐ Caution (>0.35") Pressure Drop may be too high for certain applications

Generated Noise (GN)

@ 5 sq.ft. face area

Length (in.)	Face Velocity (ft. per min)	Octave Band - Hz/Generated Noise (dB re 10^{-12} watts)							
		63	125	250	500	1K	2K	4K	8K
All	- 2000	56	56	55	54	54	58	50	38
	- 1250	53	50	47	47	49	47	34	26
	+ 1250	55	49	42	39	40	40	29	26
	+ 2000	59	58	52	48	48	52	47	37

GN correction chart at right must be used to correct GN to other face areas. →

Face Area (sq.ft.)	2.5	5	10	20	40	80
dB	-3	0	+3	+6	+9	+12

Cross Section Sizes*
"A" dimension (in.)
9
17-18
33-37
50-56
66-75
83-94
99-113
116-240
"B" dimension
ANY SIZE
Approx. weight
5.7 lbs/cu.ft.
See Rectangular Silencer Cross-Section Dimensions to ensure selection matches ductwork dimensions.

CERTIFIED PERFORMANCE DATA

VIBRO-ACOUSTICS®
A Swegon Group company

RD-HV-F8

Rectangular Dissipative
High velocity silencer
(<2000 fpm)

How to Specify Example:

14 X **22** **RD-HV-F8** X **60**

Duct Width	Duct Height	Silencer Model	Silencer Length

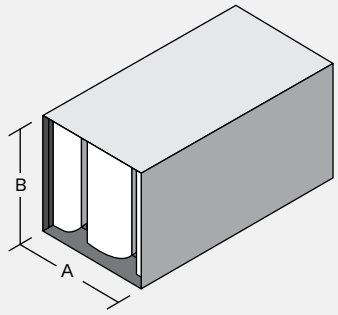

Insertion Loss (IL)

+ : "forward flow" where noise & airflow move in same direction (e.g. supply side)

- : "reverse flow" where noise & airflow move in opposite directions (e.g. return side)

See Silencer Selection Instructions. DIL above 50dB may be limited due to noise flanking around the silencer or along the duct walls. If more than 50dB DIL is required, contact your local Vibro-Acoustics representative or call **1-800-565-8401**.

Length (in.)	Face Velocity (ft. per min)	Octave Band - Hz/Dynamic Insertion Loss (dB)							
		63	125	250	500	1000	2000	4000	8000
36	- 2000	3	5	9	16	20	16	14	12
	0	1	4	8	15	20	16	14	12
	+ 2000	2	3	7	14	19	16	14	11
60	- 2000	6	7	16	28	33	23	17	14
	0	4	6	14	26	32	24	18	15
	+ 2000	4	5	13	24	32	24	18	14
84	- 2000	8	10	22	39	46	30	20	16
	0	6	9	20	37	45	32	22	18
	+ 2000	6	7	18	35	44	33	23	17
108	- 2000	11	13	29	50	55	37	23	18
	0	9	11	27	48	55	40	26	21
	+ 2000	8	9	24	45	55	42	27	21

Pressure Drop (PD)

Pressure drops are reported in accordance with ASTM E477 methods and are based upon **ideal** flow conditions (5 diameters of straight duct on silencer inlet and 10 on outlet). Less than ideal conditions will result in an increase in pressure drop due to System Effects. See Silencer System Effects Data.

Length (in.)	Face Velocity (ft. per min) / Pressure Drop (in.w.g.)						
	500	1000	1500	1750	2000	2250	2500
36	0.01	0.05	0.10	0.14	0.18	0.23	0.28
60	0.02	0.07	0.15	0.21	0.27	0.34	0.42
84	0.02	0.09	0.20	0.28	0.36	0.46	0.56
108	0.03	0.11	0.25	0.34	0.45	0.57	0.70

☐ Acceptable (0 - 0.35") ☐ Caution (>0.35") Pressure Drop may be too high for certain applications

Generated Noise (GN)

@ 5 sq.ft. face area

Length (in.)	Face Velocity (ft. per min)	Octave Band - Hz/Generated Noise (dB re 10^{-12} watts)							
		63	125	250	500	1K	2K	4K	8K
All	- 2000	58	55	54	54	55	57	49	39
	- 1250	54	48	47	48	48	46	34	27
	+ 1250	56	48	40	39	40	38	28	26
	+ 2000	60	56	51	47	48	50	44	32

GN correction chart at right must be used to correct GN to other face areas. →

Face Area (sq.ft.)	2.5	5	10	20	40	80
dB	-3	0	+3	+6	+9	+12

Cross Section Sizes*

"A" dimension (in.)
7-8
14-16
27-32
41-49
54-65
68-240

"B" dimension
ANY SIZE

Approx. weight
6.0 lbs/cu.ft.

See Rectangular Silencer Cross-Section Dimensions to ensure selection matches ductwork dimensions.

RD-HV-F9

Rectangular Dissipative
High velocity silencer
(<2000 fpm)

How to Specify Example:

21 X **21** **RD-HV-F9** X **60**

Duct Width	Duct Height	Silencer Model	Silencer Length

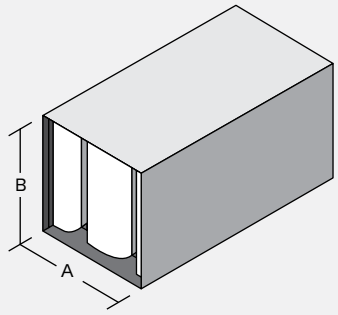

Insertion Loss (IL)

+ : "forward flow" where noise & airflow move in same direction (e.g. supply side)

- : "reverse flow" where noise & airflow move in opposite directions (e.g. return side)

See Silencer Selection Instructions. DIL above 50dB may be limited due to noise flanking around the silencer or along the duct walls. If more than 50dB DIL is required, contact your local Vibro-Acoustics representative or call **1-800-565-8401**.

Length (in.)	Face Velocity (ft. per min)	Octave Band - Hz/Dynamic Insertion Loss (dB)							
		63	125	250	500	1000	2000	4000	8000
36	- 2000	4	4	9	17	27	19	13	8
	0	3	3	8	16	26	19	12	8
	+ 2000	3	3	7	14	25	19	14	8
60	- 2000	4	6	14	25	40	28	16	11
	0	5	5	11	24	39	28	17	12
	+ 2000	4	5	10	22	38	29	19	13
84	- 2000	7	12	28	44	53	45	27	16
	0	7	10	22	42	55	48	28	18
	+ 2000	6	8	19	39	55	49	32	20
108	- 2000	7	13	27	46	54	47	27	16
	0	7	11	22	44	55	49	28	17
	+ 2000	4	10	19	41	55	52	32	21

Pressure Drop (PD)

Pressure drops are reported in accordance with ASTM E477 methods and are based upon **ideal** flow conditions (5 diameters of straight duct on silencer inlet and 10 on outlet). Less than ideal conditions will result in an increase in pressure drop due to System Effects. See Silencer System Effects Data.

Length (in.)	Face Velocity (ft. per min) / Pressure Drop (in.w.g.)						
	500	1000	1500	1750	2000	2250	2500
36	0.01	0.04	0.09	0.12	0.16	0.20	0.25
60	0.02	0.06	0.14	0.18	0.24	0.30	0.38
84	0.03	0.11	0.25	0.34	0.44	0.56	0.69
108	0.02	0.09	0.20	0.28	0.36	0.46	0.56

☐ Acceptable (0 - 0.35") ☐ Caution (>0.35") Pressure Drop may be too high for certain applications

Cross Section Sizes*
"A" dimension (in.) 6 10-13 20-26 30-240
"B" dimension ANY SIZE
Approx. weight 6.3 lbs/cu.ft.
See Rectangular Silencer Cross-Section Dimensions to ensure selection matches ductwork dimensions.

Generated Noise (GN)

@ 5 sq.ft. face area

Length (in.)	Face Velocity (ft. per min)	Octave Band - Hz/Generated Noise (dB re 10^{-12} watts)							
		63	125	250	500	1K	2K	4K	8K
All	- 2000	56	55	54	53	54	58	51	39
	- 1250	53	50	46	47	51	49	36	27
	+ 1250	56	49	41	38	39	40	30	26
	+ 2000	58	57	52	47	47	51	46	36

GN correction chart at right must be used to correct GN to other face areas. →

Face Area (sq.ft.)	2.5	5	10	20	40	80
dB	-3	0	+3	+6	+9	+12

CD

Circular Dissipative
Straight Silencers

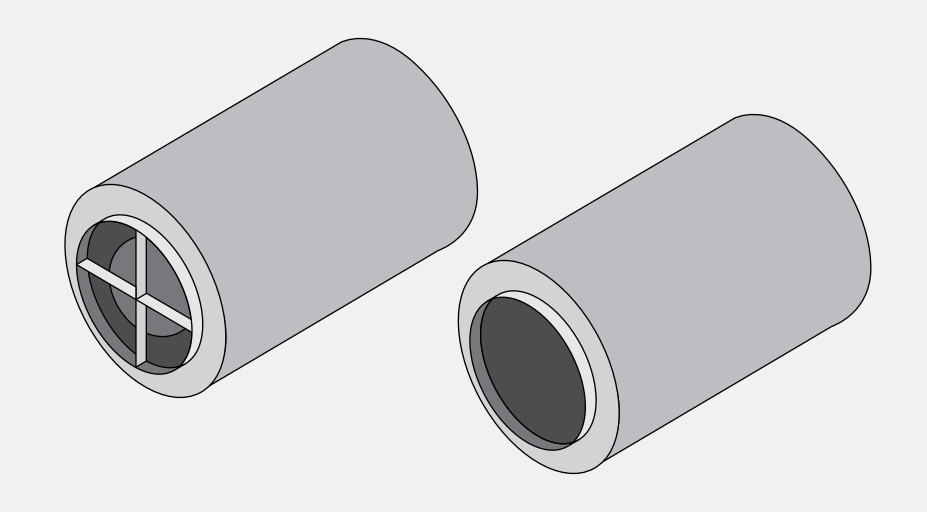

Description

VIBRO-ACOUSTICS' CD SILENCERS use acoustic grade glass fiber as the principal sound-absorbing mechanism. They incorporate glass fiber external to the duct connection size.

Some models incorporate a bullet shaped center body held in place and centered by trusses. Duct outer diameter and gap factor also vary depending on the pressure drop and attenuation requirements

Model Names

Vibro-Acoustics' silencer model names are coded to help identify their recommended application range.

*The lower the Frequency Indicator, the better the silencer's insertion loss in the low frequency range.

Circular CD - ____ - ____

Silencer Type

Velocity Range
LV, MV, HV, UHV

Frequency Indicator*
F1, F2

Applications

> In supply, return and exhaust ductwork
> In fan plenums and air handling units (both supply and return)
> On cooling towers, air-cooled chillers, etc.
> On the receiver side of valves, dampers, terminal boxes, etc.
> Economical substitution for acoustically lined duct
> Normal recommended duct velocity range

CD-LV	0-1500 fpm	CD-HV	3000-5000 fpm
CD-MV	1500-3000 fpm	CD-UHV	5000-7000 fpm

Features and Benefits

> Available in any diameter to “fit-the-duct”

> Can be selected to suit the acoustic, space, or energy-cost requirements

> Construction quality and aerodynamic design optimized to give reliable performance, best acoustics, lowest pressure drop and lowest overall cost

> Designs can be optimized to minimize extra pressure losses due to poor inlet or discharge flow conditions (e.g. near fans, elbows, etc.)

> When break-out noise is of prime concern CD silencers may be appropriate selections. They may require mass/stiffness added to their outer casing. Refer to Silencer Selection Instructions for proper silencer location.

Cautions/When Not to Use CD Silencers

> When 3-5 equivalent duct diameters of straight, unobstructed duct are not available on both the silencer’s inlet or discharge; consider using Elbow Silencers, Transitional Silencers or Fan Silencers.

> When acoustical media in the airstream is of concern; see Film Lined Silencers and No-Media Silencers.

Performance Data/Testing

See Performance Data section.
Vibro-Acoustics’ 5th generation aero-acoustic laboratory was the first laboratory to be NVLAP accredited (Lab Code 100424-0) for the ASTM E-477 silencer test code. NVLAP is administered by the U.S. Dept. of Commerce.

Silencer Selection and Location

Vibro-Acoustics offers multiple selection methods, from our complete analysis service to Do-It-Yourself quick selections. Refer to Silencer Selection Instructions for details.

Standard Construction Features

> Galvanized, lockformed casings for class I construction

> Galvanized or prime painted mild steel, stitchwelded and sealed casings for class II construction

> Prime painted, mild steel continuously welded casings for class III construction

> 2” slip connection at each end

> Centerbody “bullet” centered and supported in airstream by steel struts

> Centerbodies have either spun aerodynamic noses or truncated nose cones

> Centerbodies have perforated diffuser tail sections

> Casing and centerbodies filled with acoustic grade glass fiber under minimum 15% compression

Special Construction Options

> Heavier gauge casings and perforated metal

> Continuously welded casings

> Special materials (e.g. stainless steel, aluminum)

> Flanges

> Access doors

> Media protection: glass fiber cloth, film liner

> High transmission loss (HTL) casings to prevent break-out/break-in noise

> Built in transitions

> Removable splitters

> Flow measuring stations

> For details of above and more special options see Special Construction Options.

CERTIFIED PERFORMANCE DATA

VIBRO-ACOUSTICS®
A Swegon Group company

CD-LV-F1

Circular Dissipative
Low velocity silencer
(<1500 fpm)

How to Specify Example:

24 X **CD-LV-F1** X **72**

- **24** — Duct Connection Size
- **CD-LV-F1** — Silencer Model
- **72** — Silencer Length

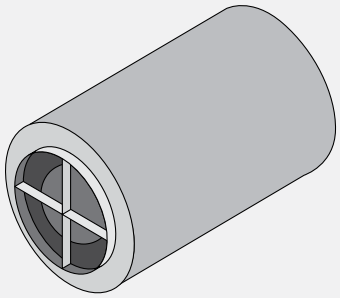

Insertion Loss (IL)

+ : "forward flow" where noise & airflow move in same direction (e.g. supply side)

- : "reverse flow" where noise & airflow move in opposite directions (e.g. return side)

DC Size - Duct Connection Size (in.)

SL - Silencer Length (in.)

FV - Face Velocity (ft. per min)

SO Dia. - Silencer Outer Diameter (in.)

See Silencer Selection Instructions. DIL above 50dB may be limited due to noise flanking around the silencer or along the duct walls. If more than 50dB DIL is required, contact your local Vibro-Acoustics representative or call **1-800-565-8401**.

DC Size (in.)	SL (in.)	FV (ft. per min)	Octave Band - Hz/Dynamic Insertion Loss (dB)							
			63	125	250	500	1000	2000	4000	8000
12	24	- 1000	7	11	18	28	39	44	43	31
		0	7	11	17	27	37	43	43	31
		+ 1000	7	11	16	26	35	42	43	31
24	48	- 1000	7	12	25	34	47	47	35	20
		0	7	12	24	33	45	46	35	20
		+ 1000	7	12	23	32	43	45	35	20
36	72	- 1000	10	17	30	41	47	39	24	15
		0	10	17	29	40	45	38	24	15
		+ 1000	10	17	28	39	43	37	24	15
48	96	- 1000	12	21	36	45	45	34	19	14
		0	12	21	35	44	43	33	19	14
		+ 1000	12	21	33	43	41	32	19	14
60	120	- 1000	13	23	37	46	43	30	17	13
		0	13	23	36	45	41	29	17	13
		+ 1000	13	23	35	44	39	28	17	13

DC Size (in.)	SL (in.)	FV (ft. per min)	Octave Band - Hz/Dynamic Insertion Loss (dB)							
			63	125	250	500	1000	2000	4000	8000
12	36	- 1000	8	15	26	41	57	60	60	46
		0	8	15	25	40	55	60	60	46
		+ 1000	8	15	24	39	53	60	60	46
24	72	- 1000	10	18	38	49	60	60	49	29
		0	10	18	37	48	60	59	49	29
		+ 1000	10	18	36	47	59	58	49	29
36	108	- 1000	13	24	44	58	60	56	36	23
		0	13	24	43	57	60	55	36	23
		+ 1000	13	24	41	56	59	54	36	23
48	144	- 1000	18	32	53	60	60	50	29	21
		0	18	32	52	59	59	49	29	21
		+ 1000	18	32	51	58	57	48	29	21
60	180	- 1000	18	33	55	60	60	44	26	20
		0	18	33	54	60	59	43	26	20
		+ 1000	18	33	53	60	57	42	26	20

Pressure Drop (PD)

Pressure drops are reported in accordance with ASTM E477 methods and are based upon **ideal** flow conditions (5 diameters of straight duct on silencer inlet and 10 on outlet). Less than ideal conditions will result in an increase in pressure drop due to System Effects. See Silencer System Effects Data.

☐ Acceptable (0 - 0.35")

▒ Caution (>0.35") Pressure Drop may be too high for certain applications

DC Size (in.)	SO Dia. (in.)	SL (in.)	Weight (lbs)	Face Velocity (ft. per min)/Pressure Drop (in.w.g.)						
				500	1000	1500	2000	2500	3000	3500
12	28	24	126	0.02	0.09	0.20	0.36	0.57	0.82	1.11
		36	164	0.04	0.15	0.33	0.59	0.92	1.33	1.81
24	40	48	363	0.02	0.08	0.19	0.33	0.52	0.74	1.01
		72	487	0.03	0.13	0.29	0.51	0.80	1.15	1.56
36	52	72	726	0.02	0.09	0.20	0.36	0.57	0.82	1.11
		108	995	0.03	0.12	0.27	0.48	0.74	1.07	1.46
48	64	96	1233	0.02	0.08	0.19	0.33	0.52	0.74	1.01
		144	1689	0.03	0.10	0.23	0.42	0.65	0.94	1.28
60	76	120	1890	0.02	0.08	0.19	0.33	0.52	0.74	1.01
		180	2599	0.03	0.10	0.23	0.40	0.63	0.90	1.23

Generated Noise (GN)

@ 3 sq.ft. face area

Length (in.)	Face Velocity (ft. per min)	Octave Band - Hz/Generated Noise (dB re 10^{-12} watts)							
		63	125	250	500	1000	2000	4000	8000
All	- 1500	59	52	44	43	45	47	44	42
	- 1000	54	47	39	38	40	42	39	37
	+ 1000	53	46	39	37	37	39	37	35
	+ 1500	58	51	44	42	42	44	42	40

GN correction chart at right must be used to correct GN to other face areas. →

Face Area (sq.ft.)	1.5	3	6	12	24	48
dB	-3	0	+3	+6	+9	+12

CD-LV-F2

Circular Dissipative
Low velocity silencer
(<1500 fpm)

How to Specify Example:

24 X **CD-LV-F2** X **72**

- **24**: Duct Connection Size
- **CD-LV-F2**: Silencer Model
- **72**: Silencer Length

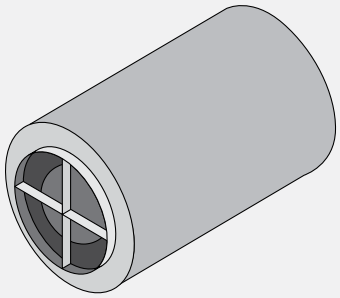

Insertion Loss (IL)

+ : "forward flow" where noise & airflow move in same direction (e.g. supply side)

- : "reverse flow" where noise & airflow move in opposite directions (e.g. return side)

DC Size - Duct Connection Size (in.)

SL - Silencer Length (in.)

FV - Face Velocity (ft. per min)

SO Dia. - Silencer Outer Diameter (in.)

See Silencer Selection Instructions. DIL above 50dB may be limited due to noise flanking around the silencer or along the duct walls. If more than 50dB DIL is required, contact your local Vibro-Acoustics representative or call **1-800-565-8401**.

DC Size (in.)	SL (in.)	FV (ft. per min)	Octave Band - Hz/Dynamic Insertion Loss (dB)							
			63	125	250	500	1000	2000	4000	8000
12	24	- 1000	4	7	16	28	39	44	43	31
		0	4	7	15	27	37	43	43	31
		+ 1000	4	7	14	26	35	42	43	31
24	48	- 1000	4	8	22	34	47	47	35	20
		0	4	8	21	33	45	46	35	20
		+ 1000	4	8	20	32	43	45	35	20
36	72	- 1000	6	11	26	41	47	39	24	15
		0	6	11	25	40	45	38	24	15
		+ 1000	6	11	24	39	43	37	24	15
48	96	- 1000	7	14	31	45	45	34	19	14
		0	7	14	30	44	43	33	19	14
		+ 1000	7	14	29	43	41	32	19	14
60	120	- 1000	8	15	32	46	43	30	17	13
		0	8	15	31	45	41	29	17	13
		+ 1000	8	15	30	44	39	28	17	13

DC Size (in.)	SL (in.)	FV (ft. per min)	Octave Band - Hz/Dynamic Insertion Loss (dB)							
			63	125	250	500	1000	2000	4000	8000
12	36	- 1000	5	10	23	41	57	60	60	46
		0	5	10	22	40	55	60	60	46
		+ 1000	5	10	21	39	53	60	60	46
24	72	- 1000	6	12	33	49	60	60	49	29
		0	6	12	32	48	60	59	49	29
		+ 1000	6	12	31	47	59	58	49	29
36	108	- 1000	8	16	38	58	60	56	36	23
		0	8	16	37	57	60	55	36	23
		+ 1000	8	16	36	56	59	54	36	23
48	144	- 1000	11	21	46	60	60	50	29	21
		0	11	21	45	59	59	49	29	21
		+ 1000	11	21	44	58	57	48	29	21
60	180	- 1000	11	22	48	60	60	44	26	20
		0	11	22	47	60	59	43	26	20
		+ 1000	11	22	46	60	57	42	26	20

Pressure Drop (PD)

Pressure drops are reported in accordance with ASTM E477 methods and are based upon **ideal** flow conditions (5 diameters of straight duct on silencer inlet and 10 on outlet). Less than ideal conditions will result in an increase in pressure drop due to System Effects. See Silencer System Effects Data.

☐ Acceptable (0 - 0.35")

▒ Caution (>0.35") Pressure Drop may be too high for certain applications

DC Size (in.)	SO Dia. (in.)	SL (in.)	Weight (lbs)	Face Velocity (ft. per min)/Pressure Drop (in.w.g.)						
				500	1000	1500	2000	2500	3000	3500
12	20	24	87	0.02	0.09	0.20	0.36	0.57	0.82	1.11
		36	114	0.04	0.15	0.33	0.59	0.92	1.33	1.81
24	32	48	279	0.02	0.08	0.19	0.33	0.52	0.74	1.01
		72	379	0.03	0.13	0.29	0.51	0.80	1.15	1.56
36	44	72	589	0.02	0.09	0.20	0.36	0.57	0.82	1.11
		108	798	0.03	0.12	0.27	0.48	0.74	1.07	1.46
48	56	96	1026	0.02	0.08	0.19	0.33	0.52	0.74	1.01
		144	1416	0.03	0.10	0.23	0.42	0.65	0.94	1.28
60	68	120	1589	0.02	0.08	0.19	0.33	0.52	0.74	1.01
		180	2232	0.03	0.10	0.23	0.40	0.63	0.90	1.23

Generated Noise (GN)

@ 3 sq.ft. face area

Length (in.)	Face Velocity (ft. per min)	Octave Band - Hz/Generated Noise (dB re 10^{-12} watts)							
		63	125	250	500	1000	2000	4000	8000
All	- 1500	59	52	44	43	45	47	44	42
	- 1000	54	47	39	38	40	42	39	37
	+ 1000	53	46	39	37	37	39	37	35
	+ 1500	58	51	44	42	44	42	42	40

GN correction chart at right must be used to correct GN to other face areas. →

Face Area (sq.ft.)	1.5	3	6	12	24	48
dB	-3	0	+3	+6	+9	+12

CERTIFIED PERFORMANCE DATA

VIBRO-ACOUSTICS®
A Swegon Group company

CD-MV-F1

Circular Dissipative
Medium velocity silencer
(<3000 fpm)

How to Specify Example:

24 X **CD-MV-F1** X **72**

- **24** — Duct Connection Size
- **CD-MV-F1** — Silencer Model
- **72** — Silencer Length

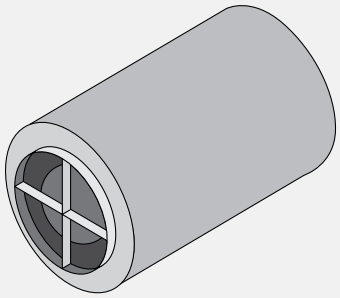

Insertion Loss (IL)

+ : "forward flow" where noise & airflow move in same direction (e.g. supply side)

- : "reverse flow" where noise & airflow move in opposite directions (e.g. return side)

DC Size - Duct Connection Size (in.)

SL - Silencer Length (in.)

FV - Face Velocity (ft. per min)

SO Dia. - Silencer Outer Diameter (in.)

See Silencer Selection Instructions. DIL above 50dB may be limited due to noise flanking around the silencer or along the duct walls. If more than 50dB DIL is required, contact your local Vibro-Acoustics representative or call **1-800-565-8401**.

DC Size (in.)	SL (in.)	FV (ft. per min)	Octave Band - Hz/Dynamic Insertion Loss (dB)							
			63	125	250	500	1000	2000	4000	8000
12	24	- 2000	5	8	13	22	31	33	30	18
		0	5	8	13	21	29	33	31	20
		+ 2000	5	8	13	20	27	33	32	22
24	48	- 2000	5	9	18	27	37	34	22	13
		0	5	9	18	26	35	34	23	15
		+ 2000	5	9	18	25	33	34	24	17
36	72	- 2000	8	14	22	32	37	26	16	9
		0	8	14	22	31	35	26	17	11
		+ 2000	8	14	22	30	33	26	18	13
48	96	- 2000	10	17	26	35	35	22	13	9
		0	10	17	26	34	33	22	14	11
		+ 2000	10	17	26	33	31	22	15	13
60	120	- 2000	10	17	29	36	31	19	12	8
		0	10	17	29	35	29	19	13	10
		+ 2000	10	17	29	34	27	19	14	12

DC Size (in.)	SL (in.)	FV (ft. per min)	Octave Band - Hz/Dynamic Insertion Loss (dB)							
			63	125	250	500	1000	2000	4000	8000
12	36	- 2000	7	11	20	32	46	49	46	28
		0	7	11	20	31	44	49	47	30
		+ 2000	7	11	20	30	42	49	48	32
24	72	- 2000	8	14	28	42	55	52	32	19
		0	8	14	28	41	53	52	33	21
		+ 2000	8	14	28	40	51	52	34	23
36	108	- 2000	12	20	33	48	54	39	25	15
		0	12	20	33	47	52	39	26	17
		+ 2000	12	20	33	46	50	39	27	19
48	144	- 2000	13	24	40	52	51	33	20	14
		0	13	24	40	51	49	33	21	16
		+ 2000	13	24	40	50	47	33	22	18
60	180	- 2000	15	26	43	53	46	28	18	13
		0	15	26	43	52	44	28	19	15
		+ 2000	15	26	43	51	42	28	20	17

Pressure Drop (PD)

Pressure drops are reported in accordance with ASTM E477 methods and are based upon **ideal** flow conditions (5 diameters of straight duct on silencer inlet and 10 on outlet). Less than ideal conditions will result in an increase in pressure drop due to System Effects. See Silencer System Effects Data.

☐ Acceptable (0 - 0.35")

▒ Caution (>0.35") Pressure Drop may be too high for certain applications

DC Size (in.)	SO Dia. (in.)	SL (in.)	Weight (lbs)	Face Velocity (ft. per min)/Pressure Drop (in.w.g.)						
				1000	1500	2000	2500	3000	3500	4000
12	28	24	123	0.02	0.05	0.10	0.15	0.21	0.29	0.38
		36	160	0.04	0.09	0.16	0.24	0.35	0.48	0.63
24	40	48	353	0.02	0.05	0.10	0.15	0.21	0.29	0.38
		72	471	0.04	0.08	0.15	0.23	0.33	0.45	0.59
36	52	72	699	0.02	0.05	0.10	0.15	0.21	0.29	0.38
		108	956	0.03	0.07	0.13	0.20	0.29	0.40	0.52
48	64	96	1180	0.02	0.05	0.09	0.14	0.20	0.28	0.36
		144	1635	0.03	0.07	0.12	0.19	0.28	0.38	0.49
60	76	120	1796	0.02	0.05	0.09	0.14	0.19	0.26	0.35
		180	2457	0.03	0.07	0.12	0.18	0.26	0.36	0.47

Generated Noise (GN)

@ 3 sq.ft. face area

Length (in.)	Face Velocity (ft. per min)	Octave Band - Hz/Generated Noise (dB re 10^{-12} watts)							
		63	125	250	500	1000	2000	4000	8000
All	- 3000	63	56	50	57	56	57	55	52
	- 1500	49	42	38	43	43	42	36	31
	+ 1500	48	41	38	42	40	39	34	29
	+ 3000	62	55	50	56	53	54	53	50

GN correction chart at right must be used to correct GN to other face areas. →

Face Area (sq.ft.)	1.5	3	6	12	24	48
dB	-3	0	+3	+6	+9	+12

CD-MV-F2

Circular Dissipative
Medium velocity silencer
(<3000 fpm)

How to Specify Example:

24 X **CD-MV-F2** X **72**

- **24** — Duct Connection Size
- **CD-MV-F2** — Silencer Model
- **72** — Silencer Length

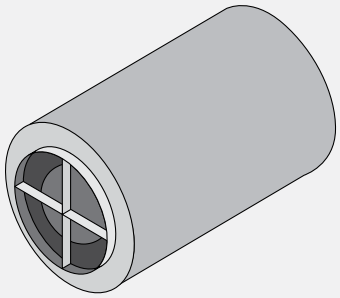

Insertion Loss (IL)

+ : "forward flow" where noise & airflow move in same direction (e.g. supply side)

- : "reverse flow" where noise & airflow move in opposite directions (e.g. return side)

DC Size - Duct Connection Size (in.)

SL - Silencer Length (in.)

FV - Face Velocity (ft. per min)

SO Dia. - Silencer Outer Diameter (in.)

See Silencer Selection Instructions. DIL above 50dB may be limited due to noise flanking around the silencer or along the duct walls. If more than 50dB DIL is required, contact your local Vibro-Acoustics representative or call **1-800-565-8401**.

DC Size (in.)	SL (in.)	FV (ft. per min)	Octave Band - Hz/Dynamic Insertion Loss (dB)							
			63	125	250	500	1000	2000	4000	8000
12	24	- 2000	3	5	11	22	31	33	30	18
		0	3	5	11	21	29	33	31	20
		+ 2000	3	5	11	20	27	33	32	22
24	48	- 2000	3	6	16	27	37	34	22	13
		0	3	6	16	26	35	34	23	15
		+ 2000	3	6	16	25	33	34	24	17
36	72	- 2000	5	9	19	32	37	26	16	9
		0	5	9	19	31	35	26	17	11
		+ 2000	5	9	19	30	33	26	18	13
48	96	- 2000	6	11	23	35	35	22	13	9
		0	6	11	23	34	33	22	14	11
		+ 2000	6	11	23	33	31	22	15	13
60	120	- 2000	6	11	25	36	31	19	12	8
		0	6	11	25	35	29	19	13	10
		+ 2000	6	11	25	34	27	19	14	12

DC Size (in.)	SL (in.)	FV (ft. per min)	Octave Band - Hz/Dynamic Insertion Loss (dB)							
			63	125	250	500	1000	2000	4000	8000
12	36	- 2000	4	7	17	32	46	49	46	28
		0	4	7	17	31	44	49	47	30
		+ 2000	4	7	17	30	42	49	48	32
24	72	- 2000	5	9	24	42	55	52	32	19
		0	5	9	24	41	53	52	33	21
		+ 2000	5	9	24	40	51	52	34	23
36	108	- 2000	7	13	29	48	54	39	25	15
		0	7	13	29	47	52	39	26	17
		+ 2000	7	13	29	46	50	39	27	19
48	144	- 2000	8	16	35	52	51	33	20	14
		0	8	16	35	51	49	33	21	16
		+ 2000	8	16	35	50	47	33	22	18
60	180	- 2000	9	17	37	53	46	28	18	13
		0	9	17	37	52	44	28	19	15
		+ 2000	9	17	37	51	42	28	20	17

Pressure Drop (PD)

Pressure drops are reported in accordance with ASTM E477 methods and are based upon **ideal** flow conditions (5 diameters of straight duct on silencer inlet and 10 on outlet). Less than ideal conditions will result in an increase in pressure drop due to System Effects. See Silencer System Effects Data.

☐ Acceptable (0 - 0.35")

▒ Caution (>0.35") Pressure Drop may be too high for certain applications

DC Size (in.)	SO Dia. (in.)	SL (in.)	Weight (lbs)	Face Velocity (ft. per min)/Pressure Drop (in.w.g.)						
				1000	1500	2000	2500	3000	3500	4000
12	20	24	85	0.02	0.05	0.10	0.15	0.21	0.29	0.38
		36	111	0.04	0.09	0.16	0.24	0.35	0.48	0.63
24	32	48	270	0.02	0.05	0.10	0.15	0.21	0.29	0.38
		72	362	0.04	0.08	0.15	0.23	0.33	0.45	0.59
36	44	72	564	0.02	0.05	0.10	0.15	0.21	0.29	0.38
		108	770	0.03	0.07	0.13	0.20	0.29	0.40	0.52
48	56	96	972	0.02	0.05	0.09	0.14	0.20	0.28	0.36
		144	1334	0.03	0.07	0.12	0.19	0.28	0.38	0.49
60	68	120	1513	0.02	0.05	0.09	0.14	0.19	0.26	0.35
		180	2081	0.03	0.07	0.12	0.18	0.26	0.36	0.47

Generated Noise (GN)

@ 3 sq.ft. face area

Length (in.)	Face Velocity (ft. per min)	Octave Band - Hz/Generated Noise (dB re 10^{-12} watts)							
		63	125	250	500	1000	2000	4000	8000
All	- 3000	63	56	50	57	56	57	55	52
	- 1500	49	42	38	43	43	42	36	31
	+ 1500	48	41	38	42	40	39	34	29
	+ 3000	62	55	50	56	53	54	53	50

GN correction chart at right must be used to correct GN to other face areas. →

Face Area (sq.ft.)	1.5	3	6	12	24	48
dB	-3	0	+3	+6	+9	+12

CERTIFIED PERFORMANCE DATA

VIBRO-ACOUSTICS®
A Swegon Group company

CD-HV-F1

Circular Dissipative
High velocity silencer
(<5000 fpm)

How to Specify Example:

24 X **CD-HV-F1** X **72**

- **24**: Duct Connection Size
- **CD-HV-F1**: Silencer Model
- **72**: Silencer Length

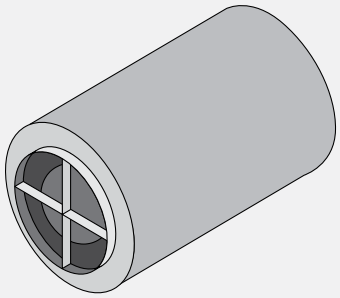

Insertion Loss (IL)

+ : "forward flow" where noise & airflow move in same direction (e.g. supply side)

- : "reverse flow" where noise & airflow move in opposite directions (e.g. return side)

DC Size - Duct Connection Size (in.)

SL - Silencer Length (in.)

FV - Face Velocity (ft. per min)

SO Dia. - Silencer Outer Diameter (in.)

See Silencer Selection Instructions. DIL above 50dB may be limited due to noise flanking around the silencer or along the duct walls. If more than 50dB DIL is required, contact your local Vibro-Acoustics representative or call **1-800-565-8401**.

DC Size (in.)	SL (in.)	FV (ft. per min)	Octave Band - Hz/Dynamic Insertion Loss (dB)							
			63	125	250	500	1000	2000	4000	8000
12	24	- 4000	5	8	13	19	26	27	22	13
		0	3	6	12	17	25	27	23	13
		+ 4000	2	5	10	15	24	27	24	13
24	48	- 4000	7	9	16	24	30	24	14	11
		0	5	8	15	22	29	24	15	11
		+ 4000	3	6	14	20	28	24	16	11
36	72	- 4000	8	12	20	28	28	19	12	9
		0	7	11	18	26	27	19	13	9
		+ 4000	5	9	17	24	26	19	14	9
48	96	- 4000	10	15	23	31	25	15	10	9
		0	8	14	22	29	24	15	11	9
		+ 4000	7	12	21	27	23	15	12	9
60	120	- 4000	10	15	25	31	22	14	10	9
		0	8	14	24	29	21	14	11	9
		+ 4000	7	12	23	27	20	14	12	9

DC Size (in.)	SL (in.)	FV (ft. per min)	Octave Band - Hz/Dynamic Insertion Loss (dB)							
			63	125	250	500	1000	2000	4000	8000
12	36	- 4000	7	11	18	28	38	41	33	20
		0	5	9	17	26	37	41	34	20
		+ 4000	3	8	16	24	36	41	35	20
24	72	- 4000	8	14	25	37	46	36	22	17
		0	7	12	24	35	45	36	23	17
		+ 4000	5	11	23	33	44	36	24	17
36	108	- 4000	12	18	29	41	41	28	18	14
		0	10	17	28	39	40	28	19	14
		+ 4000	8	15	26	37	39	28	20	14
48	144	- 4000	13	23	35	45	37	23	15	13
		0	12	21	33	43	36	23	16	13
		+ 4000	10	20	32	41	35	23	17	13
60	180	- 4000	13	23	37	45	32	21	15	13
		0	12	21	36	43	31	21	16	13
		+ 4000	10	20	35	41	30	21	17	13

Pressure Drop (PD)

Pressure drops are reported in accordance with ASTM E477 methods and are based upon **ideal** flow conditions (5 diameters of straight duct on silencer inlet and 10 on outlet). Less than ideal conditions will result in an increase in pressure drop due to System Effects. See Silencer System Effects Data.

☐ Acceptable (0 - 0.35")

▒ Caution (>0.35") Pressure Drop may be too high for certain applications

DC Size (in.)	SO Dia. (in.)	SL (in.)	Weight (lbs)	Face Velocity (ft. per min)/Pressure Drop (in.w.g.)						
				1000	2000	3000	4000	5000	6000	7000
12	28	24	120	0.01	0.03	0.08	0.14	0.22	0.31	0.43
		36	157	0.01	0.06	0.13	0.24	0.37	0.53	0.73
24	40	48	335	0.01	0.04	0.08	0.15	0.23	0.33	0.45
		72	450	0.02	0.07	0.15	0.27	0.42	0.60	0.82
36	52	72	655	0.01	0.04	0.08	0.15	0.23	0.33	0.45
		108	903	0.02	0.06	0.14	0.26	0.40	0.58	0.78
48	64	96	1090	0.01	0.04	0.08	0.15	0.23	0.33	0.45
		144	1501	0.02	0.06	0.14	0.25	0.39	0.55	0.75
60	76	120	1638	0.01	0.04	0.08	0.14	0.22	0.32	0.44
		180	2268	0.01	0.06	0.13	0.23	0.36	0.51	0.70

Generated Noise (GN)

@ 3 sq.ft. face area

Length (in.)	Face Velocity (ft. per min)	Octave Band - Hz/Generated Noise (dB re 10^{-12} watts)							
		63	125	250	500	1000	2000	4000	8000
All	- 5000	73	66	61	70	69	67	68	66
	- 3000	60	53	49	58	56	56	52	46
	+ 3000	59	52	49	57	53	53	50	44
	+ 5000	72	65	61	69	66	64	66	64

GN correction chart at right must be used to correct GN to other face areas. →

Face Area (sq.ft.)	1.5	3	6	12	24	48
dB	-3	0	+3	+6	+9	+12

CD-HV-F2

Circular Dissipative
High velocity silencer
(<5000 fpm)

How to Specify Example:

24 X **CD-HV-F2** X **72**

- **24** — Duct Connection Size
- **CD-HV-F2** — Silencer Model
- **72** — Silencer Length

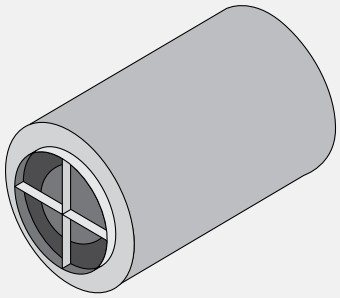

Insertion Loss (IL)

+ : "forward flow" where noise & airflow move in same direction (e.g. supply side)

- : "reverse flow" where noise & airflow move in opposite directions (e.g. return side)

DC Size - Duct Connection Size (in.)

SL - Silencer Length (in.)

FV - Face Velocity (ft. per min)

SO Dia. - Silencer Outer Diameter (in.)

See Silencer Selection Instructions. DIL above 50dB may be limited due to noise flanking around the silencer or along the duct walls. If more than 50dB DIL is required, contact your local Vibro-Acoustics representative or call **1-800-565-8401**.

DC Size (in.)	SL (in.)	FV (ft. per min)	Octave Band - Hz/Dynamic Insertion Loss (dB)							
			63	125	250	500	1000	2000	4000	8000
12	24	- 4000	3	5	11	19	26	27	22	13
		0	2	4	10	17	25	27	23	13
		+ 4000	1	3	9	15	24	27	24	13
24	48	- 4000	4	6	14	24	30	24	14	11
		0	3	5	13	22	29	24	15	11
		+ 4000	2	4	12	20	28	24	16	11
36	72	- 4000	5	8	17	28	28	19	12	9
		0	4	7	16	26	27	19	13	9
		+ 4000	3	6	15	24	26	19	14	9
48	96	- 4000	6	10	20	31	25	15	10	9
		0	5	9	19	29	24	15	11	9
		+ 4000	4	8	18	27	23	15	12	9
60	120	- 4000	6	10	22	31	22	14	10	9
		0	5	9	21	29	21	14	11	9
		+ 4000	4	8	20	27	20	14	12	9

DC Size (in.)	SL (in.)	FV (ft. per min)	Octave Band - Hz/Dynamic Insertion Loss (dB)							
			63	125	250	500	1000	2000	4000	8000
12	36	- 4000	4	7	16	28	38	41	33	20
		0	3	6	15	26	37	41	34	20
		+ 4000	2	5	13	24	36	41	35	20
24	72	- 4000	5	9	22	37	46	36	22	17
		0	4	8	21	35	45	36	23	17
		+ 4000	3	7	20	33	44	36	24	17
36	108	- 4000	7	12	25	41	41	28	18	14
		0	6	11	24	39	40	28	19	14
		+ 4000	5	10	23	37	39	28	20	14
48	144	- 4000	8	15	30	45	37	23	15	13
		0	7	14	29	43	36	23	16	13
		+ 4000	6	13	28	41	35	23	17	13
60	180	- 4000	8	15	32	45	32	21	15	13
		0	7	14	31	43	31	21	16	13
		+ 4000	6	13	30	41	30	21	17	13

Pressure Drop (PD)

Pressure drops are reported in accordance with ASTM E477 methods and are based upon **ideal** flow conditions (5 diameters of straight duct on silencer inlet and 10 on outlet). Less than ideal conditions will result in an increase in pressure drop due to System Effects. See Silencer System Effects Data.

☐ Acceptable (0 - 0.35")

▒ Caution (>0.35") Pressure Drop may be too high for certain applications

DC Size (in.)	SO Dia. (in.)	SL (in.)	Weight (lbs)	Face Velocity (ft. per min)/Pressure Drop (in.w.g.)						
				1000	2000	3000	4000	5000	6000	7000
12	20	24	82	0.01	0.03	0.08	0.14	0.22	0.31	0.43
		36	107	0.01	0.06	0.13	0.24	0.37	0.53	0.73
24	32	48	252	0.01	0.04	0.08	0.15	0.23	0.33	0.45
		72	342	0.02	0.07	0.15	0.27	0.42	0.60	0.82
36	44	72	520	0.01	0.04	0.08	0.15	0.23	0.33	0.45
		108	713	0.02	0.06	0.14	0.26	0.40	0.58	0.78
48	56	96	848	0.01	0.04	0.08	0.15	0.23	0.33	0.45
		144	1232	0.02	0.06	0.14	0.25	0.39	0.55	0.75
60	68	120	1362	0.01	0.04	0.08	0.14	0.22	0.32	0.44
		180	1892	0.01	0.06	0.13	0.23	0.36	0.51	0.70

Generated Noise (GN)

@ 3 sq.ft. face area

Length (in.)	Face Velocity (ft. per min)	Octave Band - Hz/Generated Noise (dB re 10^{-12} watts)							
		63	125	250	500	1000	2000	4000	8000
All	- 5000	73	66	61	70	69	67	68	66
	- 3000	60	53	49	58	56	56	52	46
	+ 3000	59	52	49	57	53	53	50	44
	+ 5000	72	65	61	69	66	64	66	64

GN correction chart at right must be used to correct GN to other face areas. →

Face Area (sq.ft.)	1.5	3	6	12	24	48
dB	-3	0	+3	+6	+9	+12

CERTIFIED PERFORMANCE DATA

VIBRO-ACOUSTICS®
A Swegon Group company

CD-UHV-F1

Circular Dissipative
Ultra high velocity silencer
(<7000 fpm)

How to Specify Example:

24 X **CD-UHV-F1** X **72**

- **24** — Duct Connection Size
- **CD-UHV-F1** — Silencer Model
- **72** — Silencer Length

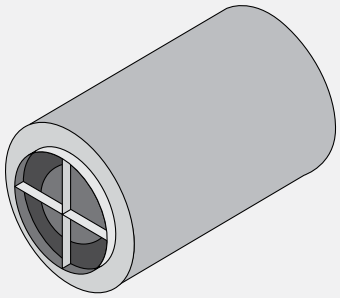

Insertion Loss (IL)

+ : "forward flow" where noise & airflow move in same direction (e.g. supply side)

- : "reverse flow" where noise & airflow move in opposite directions (e.g. return side)

DC Size - Duct Connection Size (in.)

SL - Silencer Length (in.)

FV - Face Velocity (ft. per min)

See Silencer Selection Instructions. DIL above 50dB may be limited due to noise flanking around the silencer or along the duct walls. If more than 50dB DIL is required, contact your local Vibro-Acoustics representative or call **1-800-565-8401**.

DC Size (in.)	SL (in.)	FV (ft. per min)	Octave Band - Hz/Dynamic Insertion Loss (dB)							
			63	125	250	500	1000	2000	4000	8000
12	24	- 6000	3	5	12	15	13	11	7	5
		0	2	3	9	13	15	13	8	7
		+ 6000	0	2	7	11	17	15	9	9
24	48	- 6000	7	11	16	20	13	6	6	3
		0	5	9	14	18	15	8	7	5
		+ 6000	3	8	12	16	17	10	8	7
36	72	- 6000	8	12	18	19	9	5	5	2
		0	7	11	16	17	11	7	6	4
		+ 6000	5	9	14	15	13	9	7	6
48	96	- 6000	10	15	21	18	5	4	4	1
		0	8	14	18	16	7	6	5	3
		+ 6000	7	12	16	14	9	8	6	5
60	120	- 6000	10	15	22	14	4	4	4	1
		0	8	14	20	12	6	6	5	3
		+ 6000	7	12	17	10	8	8	6	5

DC Size (in.)	SL (in.)	FV (ft. per min)	Octave Band - Hz/Dynamic Insertion Loss (dB)							
			63	125	250	500	1000	2000	4000	8000
12	36	- 6000	5	6	16	22	20	17	12	9
		0	3	5	14	20	22	19	13	11
		+ 6000	2	3	12	18	24	21	14	13
24	72	- 6000	8	14	22	29	20	9	9	6
		0	7	12	20	27	22	11	10	8
		+ 6000	5	11	17	25	24	13	11	10
36	108	- 6000	12	18	28	27	14	8	8	5
		0	10	17	25	25	16	10	9	7
		+ 6000	8	15	23	23	18	12	10	9
48	144	- 6000	12	20	30	26	9	7	6	4
		0	10	18	28	24	11	9	7	6
		+ 6000	8	17	25	22	13	11	8	8
60	180	- 6000	13	23	31	20	8	7	6	2
		0	12	21	29	18	10	9	7	4
		+ 6000	10	20	26	16	12	11	8	6

Pressure Drop (PD)

Pressure drops are reported in accordance with ASTM E477 methods and are based upon **ideal** flow conditions (5 diameters of straight duct on silencer inlet and 10 on outlet). Less than ideal conditions will result in an increase in pressure drop due to System Effects. See Silencer System Effects Data.

☐ Acceptable (0 - 0.35")

☐ Caution (>0.35") Pressure Drop may be too high for certain applications

DC Size (in.)	SO Dia. (in.)	SL (in.)	Weight (lbs)	Face Velocity (ft. per min) / Pressure Drop (in.w.g.)						
				2000	3000	4000	5000	6000	7000	
12	28	24	114	0.01	0.03	0.04	0.07	0.10	0.14	0.18
		36	149	0.02	0.04	0.07	0.11	0.15	0.21	0.27
24	40	48	307	0.01	0.02	0.04	0.06	0.08	0.11	0.15
		72	414	0.01	0.03	0.06	0.09	0.13	0.18	0.23
36	52	72	584	0.01	0.02	0.03	0.05	0.08	0.10	0.13
		108	810	0.01	0.03	0.05	0.08	0.12	0.16	0.20
48	64	96	965	0.01	0.02	0.03	0.05	0.07	0.10	0.13
		144	1340	0.01	0.03	0.05	0.08	0.11	0.15	0.19
60	76	120	1418	0.01	0.02	0.03	0.05	0.07	0.09	0.12
		180	1985	0.01	0.03	0.04	0.07	0.10	0.14	0.18

Generated Noise (GN)

@ 3 sq.ft. face area

Length (in.)	Face Velocity (ft. per min)	Octave Band - Hz/Generated Noise (dB re 10^{-12} watts)							
		63	125	250	500	1000	2000	4000	8000
All	- 7000	81	74	69	76	77	77	66	63
	- 5000	71	64	59	66	67	67	56	53
	+ 5000	70	63	59	65	64	64	54	51
	+ 7000	80	73	69	75	74	74	64	61

GN correction chart at right must be used to correct GN to other face areas. →

Face Area (sq.ft.)	1.5	3	6	12	24	48
dB	-3	0	+3	+6	+9	+12

CD-UHV-F2

Circular Dissipative
Ultra high velocity silencer
(<7000 fpm)

How to Specify Example:

24 X **CD-UHV-F2** X **72**

- **24**: Duct Connection Size
- **CD-UHV-F2**: Silencer Model
- **72**: Silencer Length

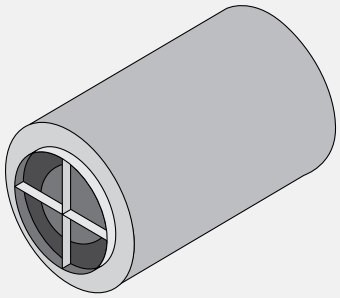

Insertion Loss (IL)

+ : "forward flow" where noise & airflow move in same direction (e.g. supply side)

- : "reverse flow" where noise & airflow move in opposite directions (e.g. return side)

DC Size - Duct Connection Size (in.)

SL - Silencer Length (in.)

FV - Face Velocity (ft. per min)

See Silencer Selection Instructions. DIL above 50dB may be limited due to noise flanking around the silencer or along the duct walls. If more than 50dB DIL is required, contact your local Vibro-Acoustics representative or call **1-800-565-8401**.

DC Size (in.)	SL (in.)	FV (ft. per min)	Octave Band - Hz/Dynamic Insertion Loss (dB)							
			63	125	250	500	1000	2000	4000	8000
12	24	- 6000	2	3	10	15	13	11	7	5
		0	1	2	8	13	15	13	8	7
		+ 6000	0	1	6	11	17	15	9	9
24	48	- 6000	4	7	14	20	13	6	6	3
		0	3	6	12	18	15	8	7	5
		+ 6000	2	5	10	16	17	10	8	7
36	72	- 6000	5	8	16	19	9	5	5	2
		0	4	7	14	17	11	7	6	4
		+ 6000	3	6	12	15	13	9	7	6
48	96	- 6000	6	10	18	18	5	4	4	1
		0	5	9	16	16	7	6	5	3
		+ 6000	4	8	14	14	9	8	6	5
60	120	- 6000	6	10	19	14	4	4	4	1
		0	5	9	17	12	6	6	5	3
		+ 6000	4	8	15	10	8	8	6	5

DC Size (in.)	SL (in.)	FV (ft. per min)	Octave Band - Hz/Dynamic Insertion Loss (dB)							
			63	125	250	500	1000	2000	4000	8000
12	36	- 6000	3	4	14	22	20	17	12	9
		0	2	3	12	20	22	19	13	11
		+ 6000	1	2	10	18	24	21	14	13
24	72	- 6000	5	9	19	29	20	9	9	6
		0	4	8	17	27	22	11	10	8
		+ 6000	3	7	15	25	24	13	11	10
36	108	- 6000	7	12	24	27	14	8	8	5
		0	6	11	22	25	16	10	9	7
		+ 6000	5	10	20	23	18	12	10	9
48	144	- 6000	7	13	26	26	9	7	6	4
		0	6	12	24	24	11	9	7	6
		+ 6000	5	11	22	22	13	11	8	8
60	180	- 6000	8	15	27	20	8	7	6	2
		0	7	14	25	18	10	9	7	4
		+ 6000	6	13	23	16	12	11	8	6

Pressure Drop (PD)

Pressure drops are reported in accordance with ASTM E477 methods and are based upon **ideal** flow conditions (5 diameters of straight duct on silencer inlet and 10 on outlet). Less than ideal conditions will result in an increase in pressure drop due to System Effects. See Silencer System Effects Data.

☐ Acceptable (0 - 0.35")

▩ Caution (>0.35") Pressure Drop may be too high for certain applications

DC Size (in.)	SO Dia. (in.)	SL (in.)	Weight (lbs)	Face Velocity (ft. per min) / Pressure Drop (in.w.g.)						
				2000	3000	4000	5000	6000	7000	
12	20	24	76	0.01	0.03	0.04	0.07	0.10	0.14	0.18
		36	99	0.02	0.04	0.07	0.11	0.15	0.21	0.27
24	32	48	228	0.01	0.02	0.04	0.06	0.08	0.11	0.15
		72	305	0.01	0.03	0.06	0.09	0.13	0.18	0.23
36	44	72	456	0.01	0.02	0.03	0.05	0.08	0.10	0.13
		108	618	0.01	0.03	0.05	0.08	0.12	0.16	0.20
48	56	96	766	0.01	0.02	0.03	0.05	0.07	0.10	0.13
		144	1047	0.01	0.03	0.05	0.08	0.11	0.15	0.19
60	68	120	1135	0.01	0.02	0.03	0.05	0.07	0.09	0.12
		180	1589	0.01	0.03	0.04	0.07	0.10	0.14	0.18

Generated Noise (GN)

@ 3 sq.ft. face area

Length (in.)	Face Velocity (ft. per min)	Octave Band - Hz/Generated Noise (dB re 10^{-12} watts)							
		63	125	250	500	1000	2000	4000	8000
All	- 7000	81	74	69	76	77	77	66	63
	- 5000	71	64	59	66	67	67	56	53
	+ 5000	70	63	59	65	64	64	54	51
	+ 7000	80	73	69	75	74	74	64	61

GN correction chart at right must be used to correct GN to other face areas. →

Face Area (sq.ft.)	1.5	3	6	12	24	48
dB	-3	0	+3	+6	+9	+12

VIBRO-ACOUSTICS®
A Swegon Group company

RED REFL RENM

Rectangular Elbow silencers

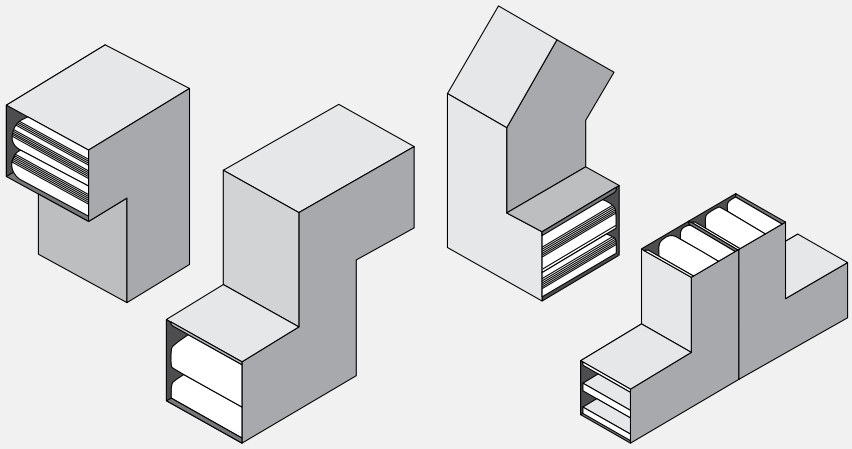

Description

VIBRO-ACOUSTICS' RED (Rectangular Elbow Dissipative), REFL (Rectangular Elbow Film Lined) and RENM (Rectangular Elbow No-Media) silencers incorporate a full 90 degree and/or a partial bend to fit the duct system configuration. RED silencers use acoustic grade glass fiber protected by perforated metal. REFL silencers incorporate a film liner between the perforated metal and the glass fiber. RENM silencers do not use glass fiber and are completely void of any fill material.

Splitters, sometimes called baffles, are aerodynamically designed to turn the air efficiently and minimize pressure drop. They vary in quantity and thickness, and air passages also vary in size.

Applications

> When there is not enough space for straight silencers (straight silencers should not be located within three diameters of duct elbows or bends)

> In supply, return or exhaust ductwork

> In fan plenums and air handling units (both supply and return)

> On the receiver side of valves, dampers, terminal boxes, etc.

> Economical substitution for acoustically lined duct

Features and Benefits

> Allows silencing when space does not permit the use of straight silencers
> Aerodynamic splitters and specially designed air passage ways efficiently turn the air for minimum pressure drop
> Multiple configurations available such as
> "T" shaped (two 90 degree Elbows back-to-back)
> "Y" shaped (two greater than 90 degree Elbows back-to-back)
> "T-Shirt" shaped (two less than 90 degree Elbows back-to-back)
> "Z" shaped (two Elbows of any angle in series)
> Available in any cross-sectional dimensions to "fit-the-duct"
> Modular unit sizes to fit ducts and air handling units without using transitions or large blank-off sections
> Can be selected to suit the acoustic, space, or energy-cost requirements
> Construction quality and aerodynamic design optimized to give reliable performance, more acoustics, lower pressure drop and lower overall cost
> Available in Dissipative (RED), Film Lined (REFL) and No-Media (RENM) options
> When break-out noise is of prime concern RED, REFL and RENM silencers may be appropriate selections. They may require mass/stiffness added to their outer casing (see HTL Silencers)

Cautions/When Not to Use RED, REFL and RENM Silencers

> When there is enough straight duct length to effectively use straight silencers

Performance Data/Testing

See RED, REFL, RENM Performance Data section. Vibro-Acoustics' 5th generation aero-acoustic laboratory was the first laboratory to be NVLAP accredited (Lab Code 100424-0) for the ASTM E-477 silencer test code. NVLAP is administered by the U.S. Dept. of Commerce.

Silencer Selection and Location

Elbow Silencers are not built up of standard modules like rectangular straight silencers. For elbow silencers, the outside to inside length ratio increases with the turning radius. Whereas for straight silencers the internal geometry is identical when silencer modules are combined. Therefore, Elbow Silencers need to be carefully selected to optimize performance. Call **1-800-565-8401** for custom selections by our Application Engineers.

Special Construction Options

> Heavier gauge casings and perforated metal
> Continuously welded casings
> Special materials (e.g. stainless steel, aluminum)
> Flanges
> Access doors
> Media protection: glass fiber cloth
> High transmission loss (HTL) casings to prevent break-out/break-in noise
> Built in transitions
> Removable splitters
> Flow measuring stations
> For details of above and more special options see Special Construction Options.

Standard Construction Features

RED

> Galvanized, lockformed casing constructed to SMACNA standards
> 2” slip connection at each end
> Aerodynamically shaped, galvanized nose at inlet
> Galvanized gap plates between splitters to ensure close dimensional tolerances at air passages
> Perforated galvanized splitters complete with perforated diffuser tail sections
> Splitters filled with acoustic grade glass fiber under minimum 15% compression

REFL

> Galvanized, lockformed casing constructed to SMACNA standards
> 2” slip connection at each end
> Aerodynamically shaped, galvanized nose at inlet
> Galvanized gap plates between splitters to ensure close dimensional tolerances at air passages
> Perforated galvanized splitters complete with perforated diffuser tail sections
> Splitters filled with acoustic grade glass fiber under minimum 15% compression
> Glass fiber carefully wrapped in Vibar™ film with lap joints away from splitter to reduce potential tearing of the Vibar™
> 0.5 inch deep corrugated honeycomb “stand-off” spacer sheet placed between the perforated metal and the film

RENM

> Galvanized, lockformed casing constructed to SMACNA standards
> 2” slip connection at each end
> Aerodynamically shaped, galvanized nose at inlet
> Special “tuned” perforated galvanized splitters complete with perforated diffuser tail sections
> Splitters configured with internal “tuned” chambers
> No acoustical media

VIBRO-ACOUSTICS®
A Swegon Group company

TD
TFL
TNM

Transitional Silencers

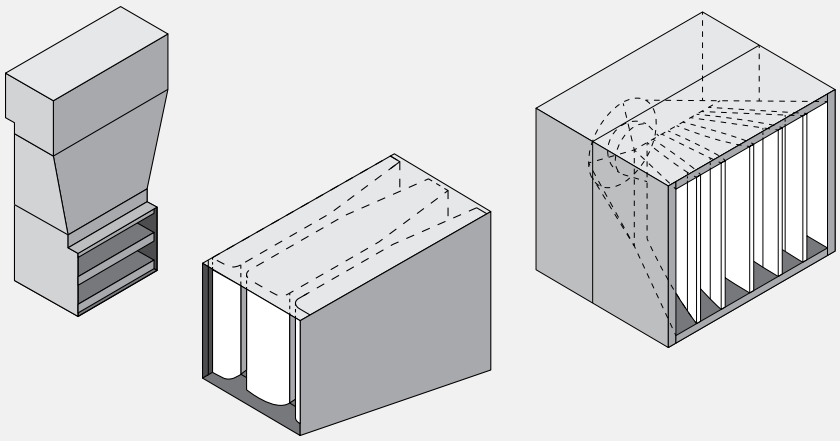

Description

VIBRO-ACOUSTICS' TD (Transitional Dissipative), TFL (Transitional Film Lined) and TNM (Transitional No-Media) silencers incorporate a transition(s) to optimally fit the duct system configuration. The transition(s) is integral to the silencer and may be in any plane. The silencers' splitters and air passages are custom designed to minimize pressure drop.

TD, TFL and TNM silencers can be straight or incorporate Elbows and HTL casings if necessary.

Applications

> Where system ductwork transitions exist at optimal or needed silencer locations

> Where controlled airflow expansions or contractions are desired

> Where varying airflow splits are required

> In supply, return or exhaust ductwork

> In fan plenums and air handling units (both supply and return)

> On the receiver side of valves, dampers, terminal boxes, etc.

Features and Benefits

> Allows silencing when the duct system shape does not permit the use of standard silencers

> Controlled aerodynamic acceleration or deceleration of the airflow through special splitter and air passage design

> Custom configurations available such as

  > Transitioning straight silencer

  > Round or oval to rectangular (or vice-versa) transitioning silencer

  > Transitioning Elbow Silencer

> Available in any cross-sectional dimensions to "fit-the-duct"

> One-piece or sectional supply for ease of installation

> Can be selected to suit the acoustic, space, or energy-cost requirements

> Construction quality and aerodynamic design optimized to give reliable performance, best acoustics, lowest pressure drop and lowest overall cost

> Available in Dissipative (TD), Film Lined (TFL) and NoMedia (TNM) options

> When break-out noise is of prime concern TD, TFL and TNM silencers may be appropriate selections. They may require mass/stiffness added to their outer casing. Refer to Silencer Selection Instructions for proper silencer location.

Cautions/When Not to Use TD, TFL AND TNM Silencers

> When there is enough space to properly fit standard silencers

Performance Data/Testing

See TD, TFL, and TNM Performance Data section. Vibro-Acoustics' 5th generation aero-acoustic laboratory was the first laboratory to be NVLAP accredited (Lab Code 100424-0) for the ASTM E-477 silencer test code. NVLAP is administered by the U.S. Dept. of Commerce.

Silencer Selection and Location

Vibro-Acoustics' Transitional Silencers need to be carefully selected to optimize performance. Call **1-800-565-8401** for custom selections by our application engineers.

Special Construction Options

> Heavier gauge casings and perforated metal

> Continuously welded casings

> Special materials (e.g. stainless steel, aluminum)

> Flanges

> Access doors

> Media protection: glass fiber cloth

> High transmission loss (htl) casings to prevent

> Break-out/break-in noise

> Removable splitters

> Flow measuring stations

> For details of above and more special options see Special Construction Options.

Standard Construction Features

TD

> Galvanized, lockformed casing constructed to SMACNA standards
> 2” slip connection at each end
> Aerodynamically shaped, galvanized nose at inlet
> Perforated galvanized splitters complete with perforated diffuser tail sections
> Splitters filled with acoustic grade glass fiber under minimum 15% compression

TFL

> Galvanized, lockformed casing constructed to SMACNA standards
> 2” slip connection at each end
> Aerodynamically shaped, galvanized nose at inlet
> Perforated galvanized splitters complete with perforated diffuser tail sections
> Splitters filled with acoustic grade glass fiber under minimum 15% compression
> Glass fiber carefully wrapped in Tedlar film with lap joints away from splitter to reduce potential tearing of the Tedlar
> 0.5 inch deep corrugated honeycomb “stand-off” spacer sheet placed between the perforated metal and the film

TNM

> Galvanized, lockformed casing constructed to SMACNA standards
> 2” slip connection at each end
> Aerodynamically shaped, galvanized nose at inlet
> Special “tuned” perforated galvanized splitters complete with perforated diffuser tail sections
> Splitters configured with internal “tuned” chambers
> No acoustical media

HVAC SILENCERS REACTIVE

RNM

Rectangular
No-Media
Straight Silencers

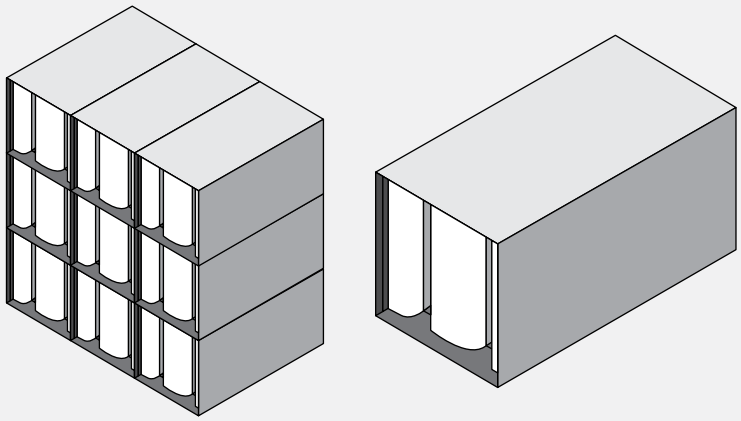

Description

VIBRO-ACOUSTICS' RNM do not contain glass fiber and are void of any fill material whatsoever. The Helmholtz resonator principle is used as the primary sound-reducing mechanism. Rectangular models utilize splitters, sometimes called baffles, which incorporate expansion chambers. The chambers are covered by specially tuned perforated metal.

Splitters in rectangular models vary in quantity and thickness, and air passages also vary in width. The splitters are aerodynamically shaped to minimize pressure drop.

Model Names

Vibro-Acoustics' silencer model names are coded to help identify their recommended application range.

*The lower the Frequency Indicator, the better the silencer's insertion loss in the low frequency range. The higher the Frequency Indicator, the better the silencer's insertion loss in the mid to high frequency ranges.

Rectangular RNM - ____ - ____

Silencer Type

Velocity Range
ULV, LV, MV, HV

Frequency Indicator*
F1, F2, F3, F4, F5,
F6, F7, F8, F9

Applications

> Wherever glass fiber is not acceptable in duct and air handling systems
> When it is necessary to periodically sterilize the entire interior of the silencer
> In laboratory fume hood systems, pharmaceutical manufacturing facilities, food processing plants, hospitals clean rooms, kitchen exhausts, etc.
> In supply, return or exhaust ductwork
> In fan plenums and air handling units (both supply and return)
> On cooling towers, air-cooled chillers, etc.
> On the receiver side of valves, dampers, terminal boxes, etc.
> Normal recommended duct velocity range

RNM-ULV	0-500 fpm	RNM-MV	750-1250 fpm
RNM-LV	0-750 fpm	RNM-HV	1250-2000 fpm

Features and Benefits

> No glass fiber particles to contaminate the airstream
> No glass fiber to host contamination within the silencer
> Ability to sterilize the silencer
> RNM: available in any cross-sectional dimensions to "fit-the-duct"
> Modular unit sizes to fit ducts and air handling units without using transitions or large blank-off sections
> Standard rectangular silencer lengths available in 36, 60, 84 and 108"; custom lengths up to 144" at no cost premium
> Can be selected to suit the acoustic, space, or energy-cost requirements
> Construction quality and aerodynamic design optimized to give reliable performance, best acoustics, lowest pressure drop and lowest overall cost
> Splitters can be aligned vertically or horizontally to minimize extra pressure losses due to poor inlet or discharge flow conditions e.g. near fans, elbows, etc.

Cautions/When Not to Use RNM Silencers

> When 3-5 equivalent duct diameters of straight, unobstructed duct are not available on both the silencer's inlet or discharge; consider using Elbow No-Media Silencers, Transitional Silencers or Fan Silencers
> When velocities exceed 2000 fpm for RNM silencers, see EX Silencers or RLP Silencers
> When break-out noise is of prime concern RNM silencers may be appropriate selections. They may require mass/stiffness added to their outer casing. Refer to Silencer Selection Instructions for proper silencer location.
> The acoustic performance of RNM silencers is generally less than RD silencers. Longer lengths may be required to achieve the insertion loss required.

Performance Data/Testing

See Performance Data section.
Vibro-Acoustics' 5th generation aero-acoustic laboratory was the first laboratory to be NVLAP accredited (Lab Code 100424-0) for the ASTM E-477 silencer test code. NVLAP is administered by the U.S. Dept. of Commerce.

Silencer Selection and Location

Vibro-Acoustics offers multiple selection methods, from our complete analysis service to Do-It-Yourself quick selections. Refer to Silencer Selection Instructions for details.

Standard Construction Features

> Galvanized, lockformed casing constructed to SMACNA standards
> 1" slip connection at each end
> Aerodynamically shaped, galvanized nose at inlet
> Special "tuned" perforated galvanized splitters complete with perforated diffuser tail section
> Splitters configured with internal "tuned" chambers
> No acoustic media

Special Construction Options

> Heavier gauge casings and perforated metal
> Continuously welded casings
> Special materials (e.g. stainless steel, aluminum)
> Flanges
> Access doors
> High transmission loss (HTL) casings to prevent break-out/break-in noise
> Built in transitions
> Removable splitters
> Internal spray sterilization systems can be built into silencers
> Drains to remove toxic or contaminated solutions
> Airflow measuring devices
> For details of above and more special options see Special Construction Options.

CERTIFIED PERFORMANCE DATA

VIBRO-ACOUSTICS®
A Swegon Group company

RNM-ULV-F1

Rectangular No-Media
Ultra low velocity silencer
(<500 fpm)

How to Specify Example:

32 X **21** **RNM-ULV-F1** X **60**

Duct Width	Duct Height	Silencer Model	Silencer Length

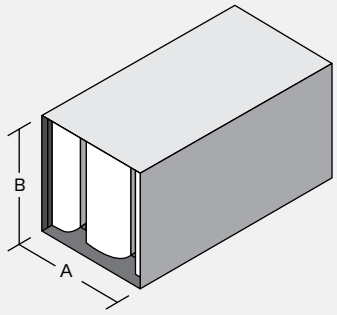

Insertion Loss (IL)

+ : "forward flow" where noise & airflow move in same direction (e.g. supply side)

- : "reverse flow" where noise & airflow move in opposite directions (e.g. return side)

See Silencer Selection Instructions. DIL above 50dB may be limited due to noise flanking around the silencer or along the duct walls. If more than 50dB DIL is required, contact your local Vibro-Acoustics Representative or call **1-800-565-8401**.

Length (in.)	Face Velocity (ft. per min)	Octave Band - Hz/Dynamic Insertion Loss (dB)							
		63	125	250	500	1000	2000	4000	8000
36	- 500	5	5	18	13	12	11	10	10
	0	5	4	15	10	10	10	10	9
	+ 500	6	5	17	12	11	10	9	9
60	- 500	8	8	20	16	15	11	12	10
	0	8	6	16	14	13	12	12	12
	+ 500	8	8	19	15	13	12	11	11
84	- 500	10	10	23	20	17	14	13	11
	0	10	8	19	16	16	14	14	13
	+ 500	10	10	22	19	17	14	13	12
108	- 500	12	12	25	24	20	16	15	13
	0	12	10	21	19	19	15	15	14
	+ 500	12	12	24	22	20	16	15	14

Pressure Drop (PD)

Pressure drops are reported in accordance with ASTM E477 methods and are based upon **ideal** flow conditions (5 diameters of straight duct on silencer inlet and 10 on outlet). Less than ideal conditions will result in an increase in pressure drop due to System Effects. See Silencer System Effects Data.

Length (in.)	Face Velocity (ft. per min) / Pressure Drop (in.w.g.)						
	250	500	750	1000	1250	1500	1750
36	0.03	0.11	0.25	0.45	0.70	1.01	1.38
60	0.03	0.14	0.31	0.55	0.85	1.23	1.67
84	0.04	0.15	0.34	0.61	0.95	1.36	1.85
108	0.04	0.17	0.37	0.67	1.04	1.50	2.04

☐ Acceptable (0 - 0.35") ☐ Caution (>0.35") Pressure Drop may be too high for certain applications

Generated Noise (GN)

@ 5 sq.ft. face area

Length (in.)	Face Velocity (ft. per min)	Octave Band - Hz/Generated Noise (dB re 10^{-12} watts)							
		63	125	250	500	1K	2K	4K	8K
All	- 750	53	46	46	50	56	58	55	38
	- 500	56	46	45	47	48	49	38	31
	+ 500	56	43	35	42	46	45	34	30
	+ 750	59	47	39	45	51	54	51	36

GN correction chart at right must be used to correct GN to other face areas. →

Face Area (sq.ft.)	2.5	5	10	20	40	80
dB	-3	0	+3	+6	+9	+12

Cross Section Sizes*

"A" dimension (in.)
15-16
29-32
58-64
87-96
116-128
145-160
174-192
203-224
232-240

"B" dimension
ANY SIZE

Approx. weight
4.3 lbs/cu.ft.

See Rectangular Silencer Cross-Section Dimensions to ensure selection matches ductwork dimensions.

CERTIFIED PERFORMANCE DATA

VIBRO-ACOUSTICS®
A Swegon Group company

RNM-ULV-F2

Rectangular No-Media
Ultra low velocity silencer
(<500 fpm)

How to Specify Example:

27 X **22** **RNM-ULV-F2** X **60**

Duct Width	Duct Height	Silencer Model	Silencer Length

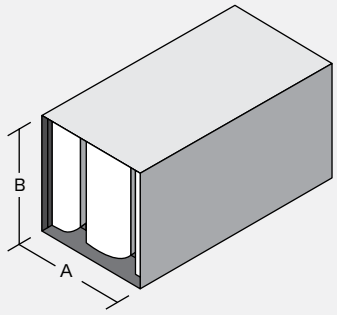

Insertion Loss (IL)

+ : "forward flow" where noise & airflow move in same direction (e.g. supply side)

- : "reverse flow" where noise & airflow move in opposite directions (e.g. return side)

See Silencer Selection Instructions. DIL above 50dB may be limited due to noise flanking around the silencer or along the duct walls. If more than 50dB DIL is required, contact your local Vibro-Acoustics Representative or call **1-800-565-8401**.

Length (in.)	Face Velocity (ft. per min)	Octave Band - Hz/Dynamic Insertion Loss (dB)							
		63	125	250	500	1000	2000	4000	8000
36	- 500	6	5	16	14	11	10	9	9
	0	6	4	13	11	10	10	10	9
	+ 500	6	5	15	13	11	10	9	9
60	- 500	9	8	18	16	14	11	11	10
	0	8	6	15	15	13	13	12	12
	+ 500	8	8	17	16	14	13	11	11
84	- 500	10	10	20	20	17	13	12	11
	0	10	8	17	17	16	14	13	12
	+ 500	10	10	20	19	16	14	13	12
108	- 500	12	12	23	23	20	15	14	12
	0	12	10	19	19	18	16	15	13
	+ 500	13	12	22	22	19	16	15	14

Pressure Drop (PD)

Pressure drops are reported in accordance with ASTM E477 methods and are based upon **ideal** flow conditions (5 diameters of straight duct on silencer inlet and 10 on outlet). Less than ideal conditions will result in an increase in pressure drop due to System Effects. See Silencer System Effects Data.

Length (in.)	Face Velocity (ft. per min) / Pressure Drop (in.w.g.)						
	250	500	750	1000	1250	1500	1750
36	0.03	0.11	0.25	0.45	0.70	1.01	1.37
60	0.03	0.14	0.31	0.54	0.85	1.22	1.66
84	0.04	0.15	0.34	0.61	0.95	1.37	1.86
108	0.04	0.17	0.38	0.67	1.04	1.50	2.04

☐ Acceptable (0 - 0.35") ☐ Caution (>0.35") Pressure Drop may be too high for certain applications

Generated Noise (GN)

@ 5 sq.ft. face area

Length (in.)	Face Velocity (ft. per min)	Octave Band - Hz/Generated Noise (dB re 10^{-12} watts)							
		63	125	250	500	1K	2K	4K	8K
All	- 750	53	46	45	50	55	58	54	38
	- 500	55	45	44	46	49	49	38	31
	+ 500	55	43	35	42	45	45	35	30
	+ 750	58	47	40	45	51	54	51	36

GN correction chart at right must be used to correct GN to other face areas. →

Face Area (sq.ft.)	2.5	5	10	20	40	80
dB	-3	0	+3	+6	+9	+12

Cross Section Sizes*

"A" dimension (in.)
14
27-28
54-57
81-86
108-115
135-144
162-173
189-202
216-231

"B" dimension
ANY SIZE

Approx. weight
4.3 lbs/cu.ft.

See Rectangular Silencer Cross-Section Dimensions to ensure selection matches ductwork dimensions.

CERTIFIED PERFORMANCE DATA

VIBRO-ACOUSTICS®
A Swegon Group company

RNM-ULV-F3

Rectangular No-Media
Ultra low velocity silencer
(<500 fpm)

How to Specify Example:

25 X **21** **RNM-ULV-F3** X **60**

Duct Width	Duct Height	Silencer Model	Silencer Length

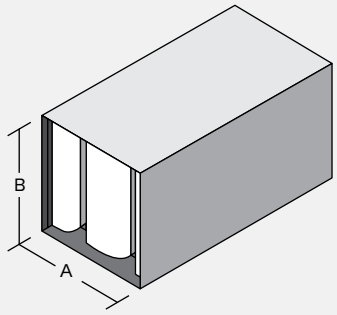

Insertion Loss (IL)

+ : "forward flow" where noise & airflow move in same direction (e.g. supply side)

- : "reverse flow" where noise & airflow move in opposite directions (e.g. return side)

See Silencer Selection Instructions. DIL above 50dB may be limited due to noise flanking around the silencer or along the duct walls. If more than 50dB DIL is required, contact your local Vibro-Acoustics Representative or call **1-800-565-8401**.

Length (in.)	Face Velocity (ft. per min)	Octave Band - Hz/Dynamic Insertion Loss (dB)							
		63	125	250	500	1000	2000	4000	8000
36	- 500	7	6	14	14	11	10	8	8
	0	6	4	12	13	10	10	10	8
	+ 500	6	5	13	14	11	11	9	9
60	- 500	10	9	16	17	14	11	10	9
	0	9	6	13	16	13	13	12	11
	+ 500	9	7	15	17	14	13	11	11
84	- 500	11	11	18	20	17	13	11	10
	0	10	8	15	17	16	14	13	11
	+ 500	11	9	17	19	16	15	13	12
108	- 500	13	12	20	22	20	15	13	11
	0	12	9	18	20	18	16	14	12
	+ 500	13	11	20	22	19	16	15	14

Pressure Drop (PD)

Pressure drops are reported in accordance with ASTM E477 methods and are based upon **ideal** flow conditions (5 diameters of straight duct on silencer inlet and 10 on outlet). Less than ideal conditions will result in an increase in pressure drop due to System Effects. See Silencer System Effects Data.

Length (in.)	Face Velocity (ft. per min) / Pressure Drop (in.w.g.)						
	250	500	750	1000	1250	1500	1750
36	0.03	0.11	0.25	0.45	0.70	1.01	1.37
60	0.03	0.14	0.30	0.54	0.85	1.22	1.66
84	0.04	0.15	0.34	0.61	0.96	1.38	1.87
108	0.04	0.17	0.38	0.67	1.04	1.50	2.05

☐ Acceptable (0 - 0.35") ☐ Caution (>0.35") Pressure Drop may be too high for certain applications

Generated Noise (GN)

@ 5 sq.ft. face area

Length (in.)	Face Velocity (ft. per min)	Octave Band - Hz/Generated Noise (dB re 10^{-12} watts)							
		63	125	250	500	1K	2K	4K	8K
All	- 750	54	46	44	49	54	57	53	37
	- 500	54	44	43	46	49	49	38	31
	+ 500	54	43	36	41	46	46	36	31
	+ 750	56	47	42	45	51	54	51	36

GN correction chart at right must be used to correct GN to other face areas. →

Face Area (sq.ft.)	2.5	5	10	20	40	80
dB	-3	0	+3	+6	+9	+12

Cross Section Sizes*

"A" dimension (in.)
13
25-26
50-53
75-80
100-107
125-134
150-161
175-188
200-215
225-240

"B" dimension
ANY SIZE

Approx. weight
4.4 lbs/cu.ft.

See Rectangular Silencer Cross-Section Dimensions to ensure selection matches ductwork dimensions.

CERTIFIED PERFORMANCE DATA

VIBRO-ACOUSTICS®
A Swegon Group company

RNM-ULV-F4

Rectangular No-Media
Ultra low velocity silencer
(<500 fpm)

How to Specify Example:

47 X **22** **RNM-ULV-F4** X **60**

Duct Width | Duct Height | Silencer Model | Silencer Length

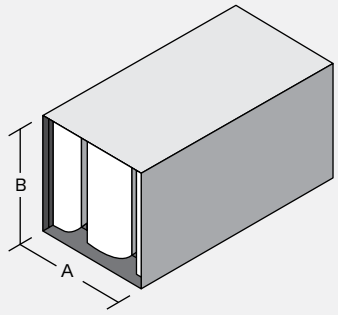

Insertion Loss (IL)

+ : "forward flow" where noise & airflow move in same direction (e.g. supply side)

- : "reverse flow" where noise & airflow move in opposite directions (e.g. return side)

See Silencer Selection Instructions. DIL above 50dB may be limited due to noise flanking around the silencer or along the duct walls. If more than 50dB DIL is required, contact your local Vibro-Acoustics Representative or call **1-800-565-8401**.

Length (in.)	Face Velocity (ft. per min)	Octave Band - Hz/Dynamic Insertion Loss (dB)							
		63	125	250	500	1000	2000	4000	8000
36	- 500	8	6	12	15	11	10	8	8
	0	7	4	10	14	11	10	9	8
	+ 500	7	5	11	15	11	11	10	9
60	- 500	11	9	14	18	14	11	9	8
	0	9	7	12	17	13	13	12	11
	+ 500	9	7	13	18	14	13	12	11
84	- 500	11	11	16	20	17	12	10	9
	0	10	8	14	18	15	15	12	11
	+ 500	11	9	15	19	16	15	13	12
108	- 500	14	12	18	21	19	14	12	10
	0	12	9	16	20	18	16	14	12
	+ 500	14	11	18	21	19	17	14	13

Pressure Drop (PD)

Pressure drops are reported in accordance with ASTM E477 methods and are based upon **ideal** flow conditions (5 diameters of straight duct on silencer inlet and 10 on outlet). Less than ideal conditions will result in an increase in pressure drop due to System Effects. See Silencer System Effects Data.

Length (in.)	Face Velocity (ft. per min) / Pressure Drop (in.w.g.)						
	250	500	750	1000	1250	1500	1750
36	0.03	0.11	0.25	0.45	0.70	1.01	1.36
60	0.03	0.14	0.30	0.54	0.84	1.22	1.65
84	0.04	0.15	0.35	0.62	0.96	1.38	1.88
108	0.04	0.17	0.38	0.67	1.05	1.51	2.05

☐ Acceptable (0 - 0.35") ☐ Caution (>0.35") Pressure Drop may be too high for certain applications

Generated Noise (GN)

@ 5 sq.ft. face area

Length (in.)	Face Velocity (ft. per min)	Octave Band - Hz/Generated Noise (dB re 10^{-12} watts)							
		63	125	250	500	1K	2K	4K	8K
All	- 750	54	47	43	49	54	57	52	37
	- 500	54	43	42	46	49	49	38	31
	+ 500	54	42	36	41	47	47	37	31
	+ 750	55	47	43	45	51	54	51	37

GN correction chart at right must be used to correct GN to other face areas. →

Face Area (sq.ft.)	2.5	5	10	20	40	80
dB	-3	0	+3	+6	+9	+12

Cross Section Sizes*

"A" dimension (in.)
12
23-24
46-49
69-74
92-99
115-124
138-149
161-174
184-199
207-224
230-240

"B" dimension
ANY SIZE

Approx. weight
4.6 lbs/cu.ft.

See Rectangular Silencer Cross-Section Dimensions to ensure selection matches ductwork dimensions.

CERTIFIED PERFORMANCE DATA

VIBRO-ACOUSTICS®
A Swegon Group company

RNM-ULV-F5

Rectangular No-Media
Ultra low velocity silencer
(<500 fpm)

How to Specify Example:

44 X **22** **RNM-ULV-F5** X **60**

Duct Width | Duct Height | Silencer Model | Silencer Length

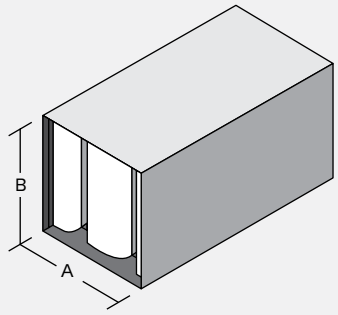

Insertion Loss (IL)

+ : "forward flow" where noise & airflow move in same direction (e.g. supply side)

- : "reverse flow" where noise & airflow move in opposite directions (e.g. return side)

See Silencer Selection Instructions. DIL above 50dB may be limited due to noise flanking around the silencer or along the duct walls. If more than 50dB DIL is required, contact your local Vibro-Acoustics Representative or call **1-800-565-8401**.

Length (in.)	Face Velocity (ft. per min)	Octave Band - Hz/Dynamic Insertion Loss (dB)							
		63	125	250	500	1000	2000	4000	8000
36	- 500	7	6	11	14	12	10	8	8
	0	6	4	10	13	12	11	9	8
	+ 500	6	5	11	14	12	11	10	9
60	- 500	10	9	14	17	16	12	10	9
	0	9	7	11	16	15	13	12	11
	+ 500	9	7	13	18	15	14	12	11
84	- 500	11	11	16	19	18	13	11	10
	0	9	8	13	18	17	15	13	11
	+ 500	10	9	15	19	18	16	13	12
108	- 500	14	13	18	21	20	15	12	10
	0	12	9	15	19	19	17	14	13
	+ 500	14	11	18	21	20	18	15	14

Pressure Drop (PD)

Pressure drops are reported in accordance with ASTM E477 methods and are based upon **ideal** flow conditions (5 diameters of straight duct on silencer inlet and 10 on outlet). Less than ideal conditions will result in an increase in pressure drop due to System Effects. See Silencer System Effects Data.

Length (in.)	Face Velocity (ft. per min) / Pressure Drop (in.w.g.)						
	250	500	750	1000	1250	1500	1750
36	0.03	0.11	0.26	0.46	0.71	1.03	1.40
60	0.03	0.14	0.31	0.55	0.86	1.24	1.68
84	0.04	0.16	0.35	0.62	0.97	1.40	1.91
108	0.04	0.17	0.39	0.69	1.08	1.55	2.11

☐ Acceptable (0 - 0.35") ☐ Caution (>0.35") Pressure Drop may be too high for certain applications

Generated Noise (GN)

@ 5 sq.ft. face area

Length (in.)	Face Velocity (ft. per min)	Octave Band - Hz/Generated Noise (dB re 10^{-12} watts)							
		63	125	250	500	1K	2K	4K	8K
All	- 750	55	47	43	49	54	57	52	37
	- 500	54	43	42	46	50	49	38	31
	+ 500	53	42	37	42	47	47	37	31
	+ 750	55	47	43	45	51	54	51	37

GN correction chart at right must be used to correct GN to other face areas. →

Face Area (sq.ft.)	2.5	5	10	20	40	80
dB	-3	0	+3	+6	+9	+12

Cross Section Sizes*
"A" dimension (in.)
11
21-22
42-45
63-68
84-91
105-114
126-137
147-160
168-183
189-206
210-229
231-240
"B" dimension
ANY SIZE
Approx. weight
4.8 lbs/cu.ft.
See Rectangular Silencer Cross-Section Dimensions to ensure selection matches ductwork dimensions.

CERTIFIED PERFORMANCE DATA

VIBRO-ACOUSTICS®
A Swegon Group company

RNM-ULV-F6

Rectangular No-Media
Ultra low velocity silencer
(<500 fpm)

How to Specify Example:

40 X **21** **RNM-ULV-F6** X **60**

Duct Width | Duct Height | Silencer Model | Silencer Length

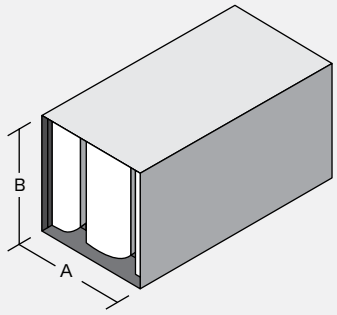

Insertion Loss (IL)

+ : "forward flow" where noise & airflow move in same direction (e.g. supply side)

- : "reverse flow" where noise & airflow move in opposite directions (e.g. return side)

See Silencer Selection Instructions. DIL above 50dB may be limited due to noise flanking around the silencer or along the duct walls. If more than 50dB DIL is required, contact your local Vibro-Acoustics Representative or call **1-800-565-8401**.

Length (in.)	Face Velocity (ft. per min)	Octave Band - Hz/Dynamic Insertion Loss (dB)							
		63	125	250	500	1000	2000	4000	8000
36	- 500	7	6	11	13	13	11	8	8
	0	6	4	9	12	13	11	10	8
	+ 500	6	5	10	13	13	11	10	9
60	- 500	10	9	14	17	17	12	10	9
	0	8	7	11	16	16	14	12	11
	+ 500	8	8	13	17	17	14	12	11
84	- 500	10	11	15	19	20	14	12	10
	0	9	8	13	17	19	16	13	12
	+ 500	9	10	15	19	20	16	14	13
108	- 500	14	13	18	20	22	16	13	11
	0	12	10	15	19	20	18	15	14
	+ 500	13	12	17	20	21	18	15	15

Pressure Drop (PD)

Pressure drops are reported in accordance with ASTM E477 methods and are based upon **ideal** flow conditions (5 diameters of straight duct on silencer inlet and 10 on outlet). Less than ideal conditions will result in an increase in pressure drop due to System Effects. See Silencer System Effects Data.

Length (in.)	Face Velocity (ft. per min) / Pressure Drop (in.w.g.)						
	250	500	750	1000	1250	1500	1750
36	0.03	0.12	0.26	0.47	0.73	1.05	1.43
60	0.04	0.14	0.32	0.56	0.88	1.26	1.72
84	0.04	0.16	0.36	0.63	0.99	1.42	1.93
108	0.04	0.18	0.40	0.71	1.11	1.60	2.17

☐ Acceptable (0 - 0.35") ☐ Caution (>0.35") Pressure Drop may be too high for certain applications

Generated Noise (GN)

@ 5 sq.ft. face area

Length (in.)	Face Velocity (ft. per min)	Octave Band - Hz/Generated Noise (dB re 10^{-12} watts)							
		63	125	250	500	1K	2K	4K	8K
All	- 750	55	47	43	48	54	57	52	37
	- 500	54	43	42	46	50	49	38	31
	+ 500	53	42	37	43	47	47	37	31
	+ 750	54	47	43	46	51	55	51	37

GN correction chart at right must be used to correct GN to other face areas. →

Face Area (sq.ft.)	2.5	5	10	20	40	80
dB	-3	0	+3	+6	+9	+12

Cross Section Sizes*

"A" dimension (in.)
10
19-20
38-41
57-62
76-83
95-104
114-125
133-146
152-167
171-188
190-240

"B" dimension
ANY SIZE

Approx. weight
4.9 lbs/cu.ft.

See Rectangular Silencer Cross-Section Dimensions to ensure selection matches ductwork dimensions.

CERTIFIED PERFORMANCE DATA

VIBRO-ACOUSTICS®
A Swegon Group company

RNM-ULV-F7

Rectangular No-Media
Ultra low velocity silencer
(<500 fpm)

How to Specify Example:

37 X **21** **RNM-ULV-F7** X **60**

Duct Width	Duct Height	Silencer Model	Silencer Length

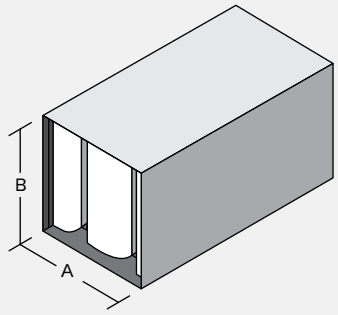

Insertion Loss (IL)

+ : "forward flow" where noise & airflow move in same direction (e.g. supply side)

- : "reverse flow" where noise & airflow move in opposite directions (e.g. return side)

See Silencer Selection Instructions. DIL above 50dB may be limited due to noise flanking around the silencer or along the duct walls. If more than 50dB DIL is required, contact your local Vibro-Acoustics Representative or call **1-800-565-8401**.

Length (in.)	Face Velocity (ft. per min)	Octave Band - Hz/Dynamic Insertion Loss (dB)							
		63	125	250	500	1000	2000	4000	8000
36	- 500	6	6	10	13	14	11	8	8
	0	6	4	9	12	14	11	10	9
	+ 500	5	5	10	13	15	12	10	9
60	- 500	9	9	13	17	19	13	11	10
	0	8	7	11	16	18	14	12	11
	+ 500	8	8	12	17	18	15	12	12
84	- 500	9	11	15	19	22	15	12	11
	0	8	8	12	17	21	16	14	13
	+ 500	8	10	14	18	22	17	14	13
108	- 500	13	14	17	20	23	17	13	12
	0	11	10	15	19	21	19	16	14
	+ 500	13	12	17	20	22	19	16	16

Pressure Drop (PD)

Pressure drops are reported in accordance with ASTM E477 methods and are based upon **ideal** flow conditions (5 diameters of straight duct on silencer inlet and 10 on outlet). Less than ideal conditions will result in an increase in pressure drop due to System Effects. See Silencer System Effects Data.

Length (in.)	Face Velocity (ft. per min) / Pressure Drop (in.w.g.)						
	250	500	750	1000	1250	1500	1750
36	0.03	0.12	0.27	0.48	0.75	1.07	1.46
60	0.04	0.14	0.32	0.57	0.89	1.29	1.75
84	0.04	0.16	0.36	0.64	1.00	1.44	1.96
108	0.05	0.18	0.41	0.73	1.14	1.64	2.24

☐ Acceptable (0 - 0.35") ☐ Caution (>0.35") Pressure Drop may be too high for certain applications

Generated Noise (GN)

@ 5 sq.ft. face area

Length (in.)	Face Velocity (ft. per min)	Octave Band - Hz/Generated Noise (dB re 10^{-12} watts)							
		63	125	250	500	1K	2K	4K	8K
All	- 750	55	47	43	48	54	57	53	37
	- 500	54	43	42	46	51	49	39	31
	+ 500	52	42	37	44	47	47	37	31
	+ 750	54	47	43	46	51	55	51	37

GN correction chart at right must be used to correct GN to other face areas. →

Face Area (sq.ft.)	2.5	5	10	20	40	80
dB	-3	0	+3	+6	+9	+12

Cross Section Sizes*
"A" dimension (in.)
9
17-18
33-37
50-56
66-75
83-94
99-113
116-240
"B" dimension
ANY SIZE
Approx. weight
5.1 lbs/cu.ft.
See Rectangular Silencer Cross-Section Dimensions to ensure selection matches ductwork dimensions.

CERTIFIED PERFORMANCE DATA

VIBRO-ACOUSTICS®
A Swegon Group company

RNM-ULV-F8

Rectangular No-Media
Ultra low velocity silencer
(<500 fpm)

How to Specify Example:

14 X **22** **RNM-ULV-F8** X **60**

Duct Width | Duct Height | Silencer Model | Silencer Length

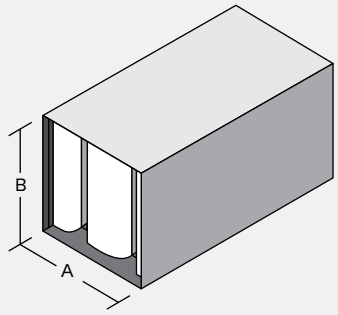

Insertion Loss (IL)

+ : "forward flow" where noise & airflow move in same direction (e.g. supply side)

- : "reverse flow" where noise & airflow move in opposite directions (e.g. return side)

See Silencer Selection Instructions. DIL above 50dB may be limited due to noise flanking around the silencer or along the duct walls. If more than 50dB DIL is required, contact your local Vibro-Acoustics Representative or call **1-800-565-8401**.

Length (in.)	Face Velocity (ft. per min)	Octave Band - Hz/Dynamic Insertion Loss (dB)							
		63	125	250	500	1000	2000	4000	8000
36	- 500	7	7	9	20	9	11	10	10
	0	4	5	8	19	8	11	11	10
	+ 500	4	6	8	19	8	11	10	9
60	- 500	10	11	13	25	16	15	15	14
	0	6	8	11	23	14	14	13	12
	+ 500	7	10	12	24	14	14	14	12
84	- 500	13	14	15	26	18	16	16	15
	0	9	11	12	24	16	16	16	15
	+ 500	10	12	14	25	16	16	16	15
108	- 500	16	18	18	27	20	18	17	16
	0	12	13	14	26	18	17	18	18
	+ 500	13	15	17	27	18	17	19	18

Pressure Drop (PD)

Pressure drops are reported in accordance with ASTM E477 methods and are based upon **ideal** flow conditions (5 diameters of straight duct on silencer inlet and 10 on outlet). Less than ideal conditions will result in an increase in pressure drop due to System Effects. See Silencer System Effects Data.

Length (in.)	Face Velocity (ft. per min) / Pressure Drop (in.w.g.)						
	250	500	750	1000	1250	1500	1750
36	0.03	0.13	0.28	0.51	0.79	1.14	1.55
60	0.04	0.15	0.33	0.60	0.93	1.34	1.82
84	0.04	0.17	0.38	0.68	1.06	1.52	2.07
108	0.05	0.19	0.43	0.76	1.19	1.71	2.33

☐ Acceptable (0 - 0.35") ☐ Caution (>0.35") Pressure Drop may be too high for certain applications

Generated Noise (GN)

@ 5 sq.ft. face area

Length (in.)	Face Velocity (ft. per min)	Octave Band - Hz/Generated Noise (dB re 10^{-12} watts)							
		63	125	250	500	1K	2K	4K	8K
All	- 750	55	45	41	45	55	57	54	36
	- 500	61	44	42	49	51	47	37	30
	+ 500	51	42	36	43	46	43	31	30
	+ 750	55	45	37	42	51	53	48	30

GN correction chart at right must be used to correct GN to other face areas. →

Face Area (sq.ft.)	2.5	5	10	20	40	80
dB	-3	0	+3	+6	+9	+12

Cross Section Sizes*
"A" dimension (in.) 7-8 14-16 27-32 41-49 54-65 68-240
"B" dimension ANY SIZE
Approx. weight 5.7 lbs/cu.ft.
See Rectangular Silencer Cross-Section Dimensions to ensure selection matches ductwork dimensions.

RNM-ULV-F9

Rectangular No-Media
Ultra low velocity silencer
(<500 fpm)

How to Specify Example:

21 X **21** **RNM-ULV-F9** X **60**

Duct Width | Duct Height | Silencer Model | Silencer Length

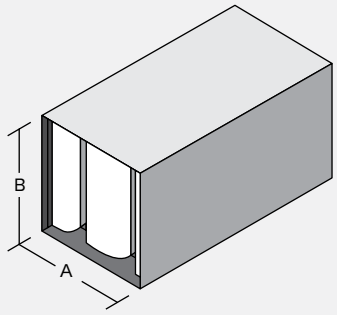

Insertion Loss (IL)

+ : "forward flow" where noise & airflow move in same direction (e.g. supply side)

- : "reverse flow" where noise & airflow move in opposite directions (e.g. return side)

See Silencer Selection Instructions. DIL above 50dB may be limited due to noise flanking around the silencer or along the duct walls. If more than 50dB DIL is required, contact your local Vibro-Acoustics Representative or call **1-800-565-8401**.

Length (in.)	Face Velocity (ft. per min)	Octave Band - Hz/Dynamic Insertion Loss (dB)							
		63	125	250	500	1000	2000	4000	8000
36	- 500	5	5	8	10	17	12	8	8
	0	4	4	7	10	17	12	10	10
	+ 500	4	4	8	11	18	12	10	9
60	- 500	8	9	13	16	24	15	12	11
	0	6	7	10	15	23	15	12	12
	+ 500	7	8	12	16	23	16	13	13
84	- 500	7	11	14	17	27	18	14	13
	0	5	9	11	16	27	18	15	14
	+ 500	6	10	13	17	27	18	15	14
108	- 500	12	15	17	18	26	20	14	13
	0	11	11	14	17	25	22	17	17
	+ 500	12	13	16	18	25	22	18	18

Pressure Drop (PD)

Pressure drops are reported in accordance with ASTM E477 methods and are based upon **ideal** flow conditions (5 diameters of straight duct on silencer inlet and 10 on outlet). Less than ideal conditions will result in an increase in pressure drop due to System Effects. See Silencer System Effects Data.

Length (in.)	Face Velocity (ft. per min) / Pressure Drop (in.w.g.)						
	250	500	750	1000	1250	1500	1750
36	0.03	0.13	0.29	0.51	0.80	1.15	1.56
60	0.04	0.15	0.34	0.60	0.94	1.35	1.84
84	0.04	0.17	0.37	0.67	1.04	1.50	2.04
108	0.05	0.20	0.44	0.79	1.23	1.78	2.42

☐ Acceptable (0 - 0.35") ☐ Caution (>0.35") Pressure Drop may be too high for certain applications

Cross Section Sizes*
"A" dimension (in.) 6 10-13 20-26 30-240
"B" dimension ANY SIZE
Approx. weight 6.4 lbs/cu.ft.
See Rectangular Silencer Cross-Section Dimensions to ensure selection matches ductwork dimensions.

Generated Noise (GN)

@ 5 sq.ft. face area

Length (in.)	Face Velocity (ft. per min)	Octave Band - Hz/Generated Noise (dB re 10^{-12} watts)							
		63	125	250	500	1K	2K	4K	8K
All	- 750	56	47	43	47	55	58	53	38
	- 500	55	43	42	47	52	50	39	31
	+ 500	51	42	39	46	47	47	36	31
	+ 750	52	47	42	46	51	56	52	37

GN correction chart at right must be used to correct GN to other face areas. →

Face Area (sq.ft.)	2.5	5	10	20	40	80
dB	-3	0	+3	+6	+9	+12

CERTIFIED PERFORMANCE DATA

VIBRO-ACOUSTICS®
A Swegon Group company

RNM-LV-F1

Rectangular No-Media
Low velocity silencer
(<750 fpm)

How to Specify Example:

32 X **21** **RNM-LV-F1** X **60**

Duct Width	Duct Height	Silencer Model	Silencer Length

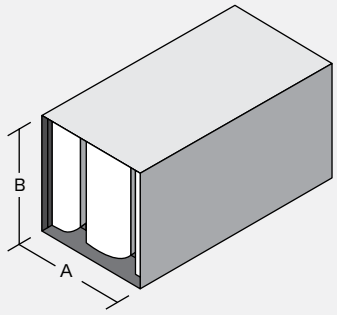

Insertion Loss (IL)

+ : "forward flow" where noise & airflow move in same direction (e.g. supply side)

- : "reverse flow" where noise & airflow move in opposite directions (e.g. return side)

See Silencer Selection Instructions. DIL above 50dB may be limited due to noise flanking around the silencer or along the duct walls. If more than 50dB DIL is required, contact your local Vibro-Acoustics Representative or call **1-800-565-8401**.

Length (in.)	Face Velocity (ft. per min)	Octave Band - Hz/Dynamic Insertion Loss (dB)							
		63	125	250	500	1000	2000	4000	8000
36	- 750	6	7	21	16	14	12	12	11
	0	4	4	15	12	11	10	10	9
	+ 750	5	5	19	15	12	11	9	8
60	- 750	9	9	22	17	15	13	11	11
	0	8	5	16	13	13	11	10	10
	+ 750	8	7	21	17	14	12	10	9
84	- 750	10	11	25	21	16	15	13	12
	0	9	7	17	16	15	13	12	11
	+ 750	9	10	23	20	16	13	12	11
108	- 750	11	13	27	25	18	16	14	13
	0	10	9	19	18	17	14	14	12
	+ 750	10	12	25	24	18	15	14	12

Pressure Drop (PD)

Pressure drops are reported in accordance with ASTM E477 methods and are based upon **ideal** flow conditions (5 diameters of straight duct on silencer inlet and 10 on outlet). Less than ideal conditions will result in an increase in pressure drop due to System Effects. See Silencer System Effects Data.

Length (in.)	Face Velocity (ft. per min) / Pressure Drop (in.w.g.)						
	250	500	750	1000	1250	1500	1750
36	0.02	0.09	0.19	0.35	0.54	0.78	1.06
60	0.02	0.07	0.15	0.26	0.41	0.59	0.80
84	0.02	0.07	0.16	0.28	0.44	0.63	0.86
108	0.02	0.08	0.17	0.30	0.47	0.68	0.92

☐ Acceptable (0 - 0.35") ☐ Caution (>0.35") Pressure Drop may be too high for certain applications

Generated Noise (GN)

@ 5 sq.ft. face area

Length (in.)	Face Velocity (ft. per min)	Octave Band - Hz/Generated Noise (dB re 10^{-12} watts)							
		63	125	250	500	1K	2K	4K	8K
All	- 750	51	47	46	49	56	60	54	39
	- 500	51	43	43	46	51	51	40	31
	+ 500	52	40	36	40	47	46	37	30
	+ 750	54	45	39	43	52	55	51	39

GN correction chart at right must be used to correct GN to other face areas. →

Face Area (sq.ft.)	2.5	5	10	20	40	80
dB	-3	0	+3	+6	+9	+12

Cross Section Sizes*

"A" dimension (in.)
15-16
29-32
58-64
87-96
116-128
145-160
174-192
203-224
232-240

"B" dimension
ANY SIZE

Approx. weight
4.2 lbs/cu.ft.

See Rectangular Silencer Cross-Section Dimensions to ensure selection matches ductwork dimensions.

CERTIFIED PERFORMANCE DATA

VIBRO-ACOUSTICS®
A Swegon Group company

RNM-LV-F2

Rectangular No-Media
Low velocity silencer
(<750 fpm)

How to Specify Example:

27 X **22** **RNM-LV-F2** X **60**

Duct Width | Duct Height | Silencer Model | Silencer Length

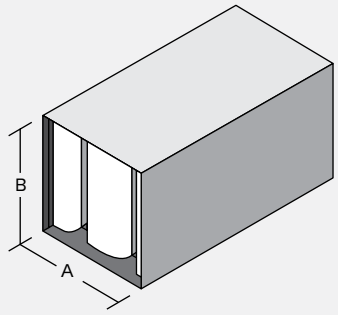

Insertion Loss (IL)

+ : "forward flow" where noise & airflow move in same direction (e.g. supply side)

- : "reverse flow" where noise & airflow move in opposite directions (e.g. return side)

See Silencer Selection Instructions. DIL above 50dB may be limited due to noise flanking around the silencer or along the duct walls. If more than 50dB DIL is required, contact your local Vibro-Acoustics Representative or call **1-800-565-8401**.

Length (in.)	Face Velocity (ft. per min)	Octave Band - Hz/Dynamic Insertion Loss (dB)							
		63	125	250	500	1000	2000	4000	8000
36	- 750	7	7	19	16	13	12	11	10
	0	4	4	13	13	11	10	10	9
	+ 750	5	5	17	16	12	11	9	8
60	- 750	10	9	20	18	14	13	10	10
	0	8	5	14	14	13	11	10	9
	+ 750	8	8	19	17	14	12	10	9
84	- 750	11	11	22	21	16	14	12	12
	0	9	7	16	16	15	13	12	11
	+ 750	9	10	21	20	16	14	12	11
108	- 750	12	13	25	24	18	16	13	12
	0	10	9	17	18	16	14	13	12
	+ 750	11	12	23	23	18	15	14	12

Pressure Drop (PD)

Pressure drops are reported in accordance with ASTM E477 methods and are based upon **ideal** flow conditions (5 diameters of straight duct on silencer inlet and 10 on outlet). Less than ideal conditions will result in an increase in pressure drop due to System Effects. See Silencer System Effects Data.

Length (in.)	Face Velocity (ft. per min) / Pressure Drop (in.w.g.)						
	250	500	750	1000	1250	1500	1750
36	0.02	0.09	0.19	0.34	0.54	0.77	1.05
60	0.02	0.06	0.15	0.26	0.40	0.58	0.79
84	0.02	0.07	0.16	0.28	0.43	0.62	0.85
108	0.02	0.08	0.17	0.30	0.47	0.68	0.92

☐ Acceptable (0 - 0.35") ☐ Caution (>0.35") Pressure Drop may be too high for certain applications

Generated Noise (GN)

@ 5 sq.ft. face area

Length (in.)	Face Velocity (ft. per min)	Octave Band - Hz/Generated Noise (dB re 10^{-12} watts)							
		63	125	250	500	1K	2K	4K	8K
All	- 750	51	47	45	48	56	59	53	39
	- 500	50	42	42	46	52	51	40	30
	+ 500	51	40	37	40	48	47	38	30
	+ 750	53	45	41	43	52	55	51	39

GN correction chart at right must be used to correct GN to other face areas. →

Face Area (sq.ft.)	2.5	5	10	20	40	80
dB	-3	0	+3	+6	+9	+12

Cross Section Sizes*

"A" dimension (in.)
14
27-28
54-57
81-86
108-115
135-144
162-173
189-202
216-231

"B" dimension
ANY SIZE

Approx. weight
4.2 lbs/cu.ft.

See Rectangular Silencer Cross-Section Dimensions to ensure selection matches ductwork dimensions.

CERTIFIED PERFORMANCE DATA

VIBRO-ACOUSTICS®
A Swegon Group company

RNM-LV-F3

Rectangular No-Media
Low velocity silencer
(<750 fpm)

How to Specify Example:

25 X **21** **RNM-LV-F3** X **60**

Duct Width | Duct Height | Silencer Model | Silencer Length

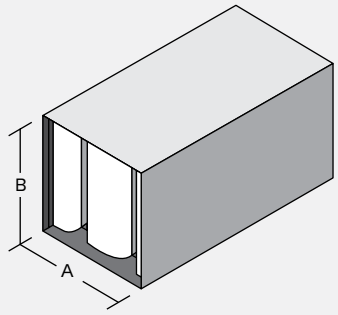

Insertion Loss (IL)

+ : "forward flow" where noise & airflow move in same direction (e.g. supply side)

- : "reverse flow" where noise & airflow move in opposite directions (e.g. return side)

See Silencer Selection Instructions. DIL above 50dB may be limited due to noise flanking around the silencer or along the duct walls. If more than 50dB DIL is required, contact your local Vibro-Acoustics Representative or call **1-800-565-8401**.

Length (in.)	Face Velocity (ft. per min)	Octave Band - Hz/Dynamic Insertion Loss (dB)							
		63	125	250	500	1000	2000	4000	8000
36	- 750	8	7	17	17	13	12	10	10
	0	5	5	12	14	11	10	9	8
	+ 750	6	5	15	17	12	11	9	9
60	- 750	11	9	18	18	14	12	10	9
	0	9	6	13	15	13	11	10	9
	+ 750	9	8	17	18	14	12	10	9
84	- 750	12	11	20	20	16	14	12	11
	0	9	7	14	17	15	14	12	11
	+ 750	10	10	18	20	16	14	12	11
108	- 750	14	13	22	22	18	15	12	12
	0	10	9	15	18	16	14	13	11
	+ 750	12	12	20	22	18	15	13	12

Pressure Drop (PD)

Pressure drops are reported in accordance with ASTM E477 methods and are based upon **ideal** flow conditions (5 diameters of straight duct on silencer inlet and 10 on outlet). Less than ideal conditions will result in an increase in pressure drop due to System Effects. See Silencer System Effects Data.

Length (in.)	Face Velocity (ft. per min) / Pressure Drop (in.w.g.)						
	250	500	750	1000	1250	1500	1750
36	0.02	0.09	0.19	0.34	0.53	0.77	1.05
60	0.02	0.06	0.14	0.26	0.40	0.58	0.79
84	0.02	0.07	0.15	0.27	0.43	0.62	0.84
108	0.02	0.08	0.17	0.30	0.47	0.68	0.93

☐ Acceptable (0 - 0.35") ☐ Caution (>0.35") Pressure Drop may be too high for certain applications

Generated Noise (GN)

@ 5 sq.ft. face area

Length (in.)	Face Velocity (ft. per min)	Octave Band - Hz/Generated Noise (dB re 10^{-12} watts)							
		63	125	250	500	1K	2K	4K	8K
All	- 750	52	47	45	48	55	59	52	38
	- 500	49	41	41	45	52	51	40	30
	+ 500	50	40	37	40	48	47	39	30
	+ 750	51	45	42	43	52	55	51	40

GN correction chart at right must be used to correct GN to other face areas. →

Face Area (sq.ft.)	2.5	5	10	20	40	80
dB	-3	0	+3	+6	+9	+12

Cross Section Sizes*

"A" dimension (in.)
13
25-26
50-53
75-80
100-107
125-134
150-161
175-188
200-215
225-240

"B" dimension
ANY SIZE

Approx. weight
4.4 lbs/cu.ft.

See Rectangular Silencer Cross-Section Dimensions to ensure selection matches ductwork dimensions.

CERTIFIED PERFORMANCE DATA

VIBRO-ACOUSTICS®
A Swegon Group company

RNM-LV-F4

Rectangular No-Media
Low velocity silencer
(<750 fpm)

How to Specify Example:

47 X **22** **RNM-LV-F4** X **60**

Duct Width | Duct Height | Silencer Model | Silencer Length

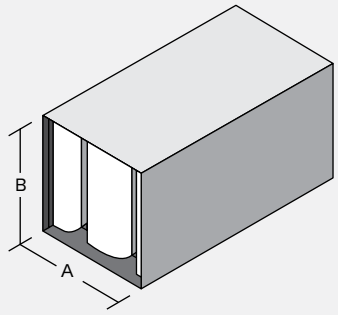

Insertion Loss (IL)

+ : "forward flow" where noise & airflow move in same direction (e.g. supply side)

- : "reverse flow" where noise & airflow move in opposite directions (e.g. return side)

See Silencer Selection Instructions. DIL above 50dB may be limited due to noise flanking around the silencer or along the duct walls. If more than 50dB DIL is required, contact your local Vibro-Acoustics Representative or call **1-800-565-8401**.

Length (in.)	Face Velocity (ft. per min)	Octave Band - Hz/Dynamic Insertion Loss (dB)							
		63	125	250	500	1000	2000	4000	8000
36	- 750	9	7	14	17	13	11	9	9
	0	5	5	10	15	11	11	9	8
	+ 750	6	5	13	17	12	12	9	9
60	- 750	12	9	16	19	14	12	9	9
	0	9	6	12	16	13	12	10	8
	+ 750	9	8	15	18	14	13	10	10
84	- 750	13	11	17	20	16	14	11	11
	0	10	7	12	17	15	14	11	11
	+ 750	11	10	16	20	16	15	12	11
108	- 750	15	13	19	21	18	15	11	11
	0	10	8	13	19	16	15	12	11
	+ 750	13	11	17	21	17	16	13	12

Pressure Drop (PD)

Pressure drops are reported in accordance with ASTM E477 methods and are based upon **ideal** flow conditions (5 diameters of straight duct on silencer inlet and 10 on outlet). Less than ideal conditions will result in an increase in pressure drop due to System Effects. See Silencer System Effects Data.

Length (in.)	Face Velocity (ft. per min) / Pressure Drop (in.w.g.)						
	250	500	750	1000	1250	1500	1750
36	0.02	0.09	0.19	0.34	0.53	0.77	1.04
60	0.02	0.06	0.14	0.26	0.40	0.57	0.78
84	0.02	0.07	0.15	0.27	0.42	0.61	0.83
108	0.02	0.08	0.17	0.31	0.48	0.69	0.93

☐ Acceptable (0 - 0.35") ☐ Caution (>0.35") Pressure Drop may be too high for certain applications

Generated Noise (GN)

@ 5 sq.ft. face area

Length (in.)	Face Velocity (ft. per min)	Octave Band - Hz/Generated Noise (dB re 10^{-12} watts)							
		63	125	250	500	1K	2K	4K	8K
All	- 750	53	47	44	47	55	58	51	38
	- 500	49	41	39	45	52	51	40	30
	+ 500	49	40	38	40	48	48	40	31
	+ 750	50	46	43	43	52	56	51	40

GN correction chart at right must be used to correct GN to other face areas. →

Face Area (sq.ft.)	2.5	5	10	20	40	80
dB	-3	0	+3	+6	+9	+12

Cross Section Sizes*

"A" dimension (in.)
12
23-24
46-49
69-74
92-99
115-124
138-149
161-174
184-199
207-224
230-240

"B" dimension
ANY SIZE

Approx. weight
4.5 lbs/cu.ft.

See Rectangular Silencer Cross-Section Dimensions to ensure selection matches ductwork dimensions.

CERTIFIED PERFORMANCE DATA

VIBRO-ACOUSTICS®
A Swegon Group company

RNM-LV-F5

Rectangular No-Media
Low velocity silencer
(<750 fpm)

How to Specify Example:

47 X **22** **RNM-LV-F5** X **60**

Duct Width | Duct Height | Silencer Model | Silencer Length

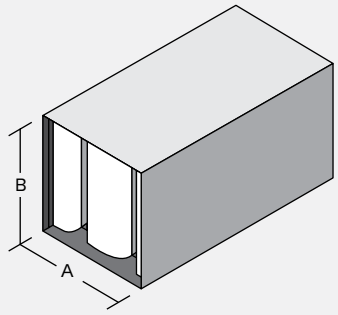

Insertion Loss (IL)

+ : "forward flow" where noise & airflow move in same direction (e.g. supply side)

- : "reverse flow" where noise & airflow move in opposite directions (e.g. return side)

See Silencer Selection Instructions. DIL above 50dB may be limited due to noise flanking around the silencer or along the duct walls. If more than 50dB DIL is required, contact your local Vibro-Acoustics Representative or call **1-800-565-8401**.

Length (in.)	Face Velocity (ft. per min)	Octave Band - Hz/Dynamic Insertion Loss (dB)							
		63	125	250	500	1000	2000	4000	8000
36	- 750	8	7	14	17	14	12	9	9
	0	5	5	10	15	13	11	9	8
	+ 750	6	5	12	17	14	12	10	9
60	- 750	11	9	15	19	16	12	9	9
	0	8	6	11	16	14	12	10	9
	+ 750	8	8	14	18	16	13	11	10
84	- 750	13	11	17	19	18	14	11	11
	0	9	7	11	17	16	14	11	11
	+ 750	10	9	15	19	17	15	12	11
108	- 750	14	12	18	21	19	15	12	11
	0	10	8	13	18	18	15	12	11
	+ 750	12	11	17	20	19	17	13	12

Pressure Drop (PD)

Pressure drops are reported in accordance with ASTM E477 methods and are based upon **ideal** flow conditions (5 diameters of straight duct on silencer inlet and 10 on outlet). Less than ideal conditions will result in an increase in pressure drop due to System Effects. See Silencer System Effects Data.

Length (in.)	Face Velocity (ft. per min) / Pressure Drop (in.w.g.)						
	250	500	750	1000	1250	1500	1750
36	0.02	0.09	0.19	0.34	0.54	0.77	1.05
60	0.02	0.06	0.14	0.26	0.40	0.58	0.79
84	0.02	0.07	0.15	0.27	0.42	0.61	0.83
108	0.02	0.08	0.17	0.31	0.48	0.69	0.94

☐ Acceptable (0 - 0.35") ☐ Caution (>0.35") Pressure Drop may be too high for certain applications

Generated Noise (GN)

@ 5 sq.ft. face area

Length (in.)	Face Velocity (ft. per min)	Octave Band - Hz/Generated Noise (dB re 10^{-12} watts)							
		63	125	250	500	1K	2K	4K	8K
All	- 750	53	47	44	48	55	59	52	38
	- 500	48	41	39	45	53	51	40	30
	+ 500	50	40	38	40	48	48	40	31
	+ 750	50	46	43	44	51	56	52	41

GN correction chart at right must be used to correct GN to other face areas. →

Face Area (sq.ft.)	2.5	5	10	20	40	80
dB	-3	0	+3	+6	+9	+12

Cross Section Sizes*

"A" dimension (in.)
11
21-22
42-45
63-68
84-91
105-114
126-137
147-160
168-183
189-206
210-229
231-240

"B" dimension
ANY SIZE

Approx. weight
4.7 lbs/cu.ft.

See Rectangular Silencer Cross-Section Dimensions to ensure selection matches ductwork dimensions.

CERTIFIED PERFORMANCE DATA

VIBRO-ACOUSTICS®
A Swegon Group company

RNM-LV-F6

Rectangular No-Media
Low velocity silencer
(<750 fpm)

How to Specify Example:

40 X **21** **RNM-LV-F6** X **60**

Duct Width | Duct Height | Silencer Model | Silencer Length

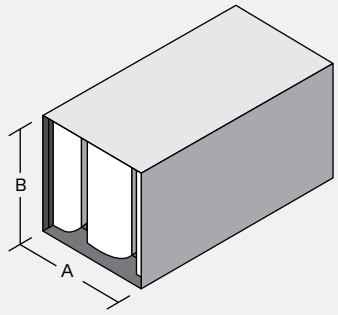

Insertion Loss (IL)

+ : "forward flow" where noise & airflow move in same direction (e.g. supply side)

- : "reverse flow" where noise & airflow move in opposite directions (e.g. return side)

See Silencer Selection Instructions. DIL above 50dB may be limited due to noise flanking around the silencer or along the duct walls. If more than 50dB DIL is required, contact your local Vibro-Acoustics Representative or call **1-800-565-8401**.

Length (in.)	Face Velocity (ft. per min)	Octave Band - Hz/Dynamic Insertion Loss (dB)							
		63	125	250	500	1000	2000	4000	8000
36	- 750	8	7	13	17	16	12	9	9
	0	5	5	9	14	14	11	10	8
	+ 750	6	5	12	16	16	12	10	9
60	- 750	10	9	15	18	18	13	9	9
	0	7	6	11	16	16	12	10	10
	+ 750	7	7	14	18	18	13	11	10
84	- 750	12	11	16	19	19	15	11	11
	0	9	7	11	17	18	14	11	11
	+ 750	10	9	15	19	19	15	12	11
108	- 750	12	12	18	20	21	16	12	11
	0	9	8	12	18	20	16	12	11
	+ 750	11	10	16	20	21	17	13	12

Pressure Drop (PD)

Pressure drops are reported in accordance with ASTM E477 methods and are based upon **ideal** flow conditions (5 diameters of straight duct on silencer inlet and 10 on outlet). Less than ideal conditions will result in an increase in pressure drop due to System Effects. See Silencer System Effects Data.

Length (in.)	Face Velocity (ft. per min) / Pressure Drop (in.w.g.)						
	250	500	750	1000	1250	1500	1750
36	0.02	0.09	0.19	0.35	0.54	0.78	1.06
60	0.02	0.06	0.15	0.26	0.40	0.58	0.79
84	0.02	0.07	0.15	0.27	0.42	0.61	0.83
108	0.02	0.08	0.17	0.31	0.48	0.70	0.95

☐ Acceptable (0 - 0.35") ☐ Caution (>0.35") Pressure Drop may be too high for certain applications

Generated Noise (GN)

@ 5 sq.ft. face area

Length (in.)	Face Velocity (ft. per min)	Octave Band - Hz/Generated Noise (dB re 10^{-12} watts)							
		63	125	250	500	1K	2K	4K	8K
All	- 750	53	47	44	48	56	60	53	39
	- 500	48	41	40	45	54	52	41	31
	+ 500	50	40	38	40	48	49	40	31
	+ 750	50	46	43	44	51	57	52	42

GN correction chart at right must be used to correct GN to other face areas. →

Face Area (sq.ft.)	2.5	5	10	20	40	80
dB	-3	0	+3	+6	+9	+12

Cross Section Sizes*

"A" dimension (in.)
10
19-20
38-41
57-62
76-83
95-104
114-125
133-146
152-167
171-188
190-240

"B" dimension
ANY SIZE

Approx. weight
4.9 lbs/cu.ft.

See Rectangular Silencer Cross-Section Dimensions to ensure selection matches ductwork dimensions.

CERTIFIED PERFORMANCE DATA

VIBRO-ACOUSTICS®
A Swegon Group company

RNM-LV-F7

Rectangular No-Media
Low velocity silencer
(<750 fpm)

How to Specify Example:

37 X **21** **RNM-LV-F7** X **60**

Duct Width | Duct Height | Silencer Model | Silencer Length

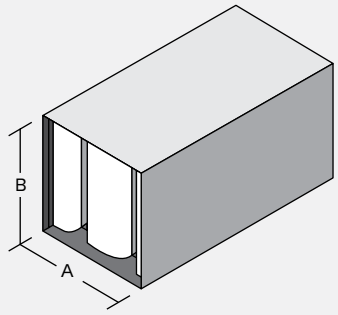

Insertion Loss (IL)

+ : "forward flow" where noise & airflow move in same direction (e.g. supply side)

- : "reverse flow" where noise & airflow move in opposite directions (e.g. return side)

See Silencer Selection Instructions. DIL above 50dB may be limited due to noise flanking around the silencer or along the duct walls. If more than 50dB DIL is required, contact your local Vibro-Acoustics Representative or call **1-800-565-8401**.

Length (in.)	Face Velocity (ft. per min)	Octave Band - Hz/Dynamic Insertion Loss (dB)							
		63	125	250	500	1000	2000	4000	8000
36	- 750	7	7	13	16	18	12	10	9
	0	5	5	9	14	15	11	10	9
	+ 750	6	5	11	16	17	12	10	9
60	- 750	8	9	15	18	20	13	9	9
	0	6	6	10	16	18	13	10	9
	+ 750	6	7	14	17	20	13	11	10
84	- 750	12	11	16	19	21	15	11	10
	0	9	7	11	16	20	14	11	11
	+ 750	9	9	14	18	21	15	12	11
108	- 750	11	11	17	20	23	17	12	11
	0	9	7	12	17	21	16	12	11
	+ 750	10	10	15	19	23	18	13	13

Pressure Drop (PD)

Pressure drops are reported in accordance with ASTM E477 methods and are based upon **ideal** flow conditions (5 diameters of straight duct on silencer inlet and 10 on outlet). Less than ideal conditions will result in an increase in pressure drop due to System Effects. See Silencer System Effects Data.

Length (in.)	Face Velocity (ft. per min) / Pressure Drop (in.w.g.)						
	250	500	750	1000	1250	1500	1750
36	0.02	0.09	0.20	0.35	0.54	0.78	1.06
60	0.02	0.07	0.15	0.26	0.41	0.59	0.80
84	0.02	0.07	0.15	0.27	0.42	0.61	0.83
108	0.02	0.08	0.18	0.31	0.49	0.70	0.96

☐ Acceptable (0 - 0.35") ☐ Caution (>0.35") Pressure Drop may be too high for certain applications

Generated Noise (GN)

@ 5 sq.ft. face area

Length (in.)	Face Velocity (ft. per min)	Octave Band - Hz/Generated Noise (dB re 10^{-12} watts)							
		63	125	250	500	1K	2K	4K	8K
All	- 750	53	47	45	49	56	60	54	40
	- 500	48	41	40	45	54	53	42	31
	+ 500	51	40	38	41	48	49	41	31
	+ 750	50	46	44	45	51	57	53	42

GN correction chart at right must be used to correct GN to other face areas. →

Face Area (sq.ft.)	2.5	5	10	20	40	80
dB	-3	0	+3	+6	+9	+12

Cross Section Sizes*

"A" dimension (in.)
9
17-18
33-37
50-56
66-75
83-94
99-113
116-240

"B" dimension
ANY SIZE

Approx. weight
5.0 lbs/cu.ft.

See Rectangular Silencer Cross-Section Dimensions to ensure selection matches ductwork dimensions.

RNM-LV-F8

Rectangular No-Media
Low velocity silencer
(<750 fpm)

How to Specify Example:

14 X **22** **RNM-LV-F8** X **60**

Duct Width | Duct Height | Silencer Model | Silencer Length

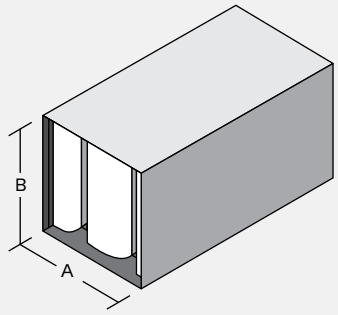

Insertion Loss (IL)

+ : "forward flow" where noise & airflow move in same direction (e.g. supply side)

- : "reverse flow" where noise & airflow move in opposite directions (e.g. return side)

See Silencer Selection Instructions. DIL above 50dB may be limited due to noise flanking around the silencer or along the duct walls. If more than 50dB DIL is required, contact your local Vibro-Acoustics Representative or call **1-800-565-8401**.

Length (in.)	Face Velocity (ft. per min)	Octave Band - Hz/Dynamic Insertion Loss (dB)							
		63	125	250	500	1000	2000	4000	8000
36	- 750	8	9	12	26	16	13	13	12
	0	5	6	8	22	10	10	11	10
	+ 750	4	7	11	24	14	12	12	9
60	- 750	7	11	15	27	18	13	13	12
	0	2	7	10	23	14	12	12	11
	+ 750	2	8	13	26	17	13	12	11
84	- 750	9	12	15	27	21	15	14	13
	0	5	8	10	24	17	13	13	12
	+ 750	5	10	14	26	20	14	13	12
108	- 750	11	13	16	28	24	16	15	14
	0	8	9	10	24	19	14	14	13
	+ 750	8	11	15	27	22	15	15	14

Pressure Drop (PD)

Pressure drops are reported in accordance with ASTM E477 methods and are based upon **ideal** flow conditions (5 diameters of straight duct on silencer inlet and 10 on outlet). Less than ideal conditions will result in an increase in pressure drop due to System Effects. See Silencer System Effects Data.

Length (in.)	Face Velocity (ft. per min) / Pressure Drop (in.w.g.)						
	250	500	750	1000	1250	1500	1750
36	0.02	0.09	0.20	0.35	0.55	0.79	1.07
60	0.02	0.07	0.15	0.26	0.41	0.59	0.80
84	0.02	0.07	0.15	0.28	0.43	0.62	0.84
108	0.02	0.07	0.16	0.29	0.45	0.65	0.89

☐ Acceptable (0 - 0.35") ☐ Caution (>0.35") Pressure Drop may be too high for certain applications

Generated Noise (GN)

@ 5 sq.ft. face area

Length (in.)	Face Velocity (ft. per min)	Octave Band - Hz/Generated Noise (dB re 10^{-12} watts)							
		63	125	250	500	1K	2K	4K	8K
All	- 750	52	45	43	48	58	61	57	41
	- 500	53	42	41	48	55	52	42	30
	+ 500	52	40	36	39	46	47	36	30
	+ 750	53	44	39	42	51	56	50	37

GN correction chart at right must be used to correct GN to other face areas. →

Face Area (sq.ft.)	2.5	5	10	20	40	80
dB	-3	0	+3	+6	+9	+12

Cross Section Sizes*

"A" dimension (in.)
7-8
14-16
27-32
41-49
54-65
68-240

"B" dimension
ANY SIZE

Approx. weight
5.6 lbs/cu.ft.

See Rectangular Silencer Cross-Section Dimensions to ensure selection matches ductwork dimensions.

RNM-LV-F9

Rectangular No-Media
Low velocity silencer
(<750 fpm)

How to Specify Example:

21 X **21** **RNM-LV-F9** X **60**

Duct Width | Duct Height | Silencer Model | Silencer Length

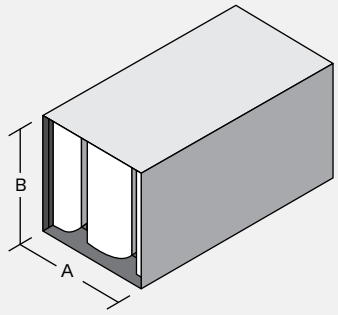

Insertion Loss (IL)

+ : "forward flow" where noise & airflow move in same direction (e.g. supply side)

- : "reverse flow" where noise & airflow move in opposite directions (e.g. return side)

See Silencer Selection Instructions. DIL above 50dB may be limited due to noise flanking around the silencer or along the duct walls. If more than 50dB DIL is required, contact your local Vibro-Acoustics Representative or call **1-800-565-8401**.

Length (in.)	Face Velocity (ft. per min)	Octave Band - Hz/Dynamic Insertion Loss (dB)							
		63	125	250	500	1000	2000	4000	8000
36	- 750	6	7	11	16	23	13	10	9
	0	5	5	8	14	19	12	10	10
	+ 750	5	5	10	15	23	13	11	10
60	- 750	5	9	14	17	26	14	10	9
	0	2	5	9	15	23	13	11	11
	+ 750	4	7	12	17	26	14	12	11
84	- 750	10	10	15	18	27	16	12	10
	0	7	6	9	15	24	15	11	10
	+ 750	8	8	13	17	26	16	13	12
108	- 750	7	10	15	18	28	19	13	11
	0	7	6	10	15	26	18	13	12
	+ 750	7	8	13	18	28	20	14	13

Pressure Drop (PD)

Pressure drops are reported in accordance with ASTM E477 methods and are based upon **ideal** flow conditions (5 diameters of straight duct on silencer inlet and 10 on outlet). Less than ideal conditions will result in an increase in pressure drop due to System Effects. See Silencer System Effects Data.

Length (in.)	Face Velocity (ft. per min) / Pressure Drop (in.w.g.)						
	250	500	750	1000	1250	1500	1750
36	0.02	0.09	0.20	0.36	0.55	0.80	1.09
60	0.02	0.07	0.15	0.27	0.41	0.60	0.81
84	0.02	0.07	0.15	0.27	0.42	0.61	0.83
108	0.02	0.08	0.18	0.32	0.50	0.72	0.98

☐ Acceptable (0 - 0.35") ☐ Caution (>0.35") Pressure Drop may be too high for certain applications

Generated Noise (GN)

@ 5 sq.ft. face area

Length (in.)	Face Velocity (ft. per min)	Octave Band - Hz/Generated Noise (dB re 10^{-12} watts)							
		63	125	250	500	1K	2K	4K	8K
All	- 750	53	47	45	50	58	62	56	43
	- 500	47	41	40	46	56	55	44	31
	+ 500	52	40	38	42	47	51	41	31
	+ 750	51	46	44	46	51	59	54	45

GN correction chart at right must be used to correct GN to other face areas. →

Face Area (sq.ft.)	2.5	5	10	20	40	80
dB	-3	0	+3	+6	+9	+12

Cross Section Sizes*

"A" dimension (in.)
6
10-13
20-26
30-240

"B" dimension
ANY SIZE

Approx. weight
6.3 lbs/cu.ft.

See Rectangular Silencer Cross-Section Dimensions to ensure selection matches ductwork dimensions.

CERTIFIED PERFORMANCE DATA

VIBRO-ACOUSTICS®
A Swegon Group company

RNM-MV-F1

Rectangular No-Media
Medium velocity silencer
(<1250 fpm)

How to Specify Example:

32 X **21** **RNM-MV-F1** X **60**

Duct Width	Duct Height	Silencer Model	Silencer Length

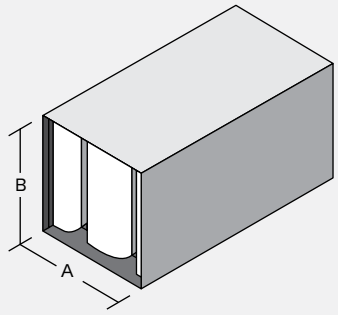

Insertion Loss (IL)

+ : "forward flow" where noise & airflow move in same direction (e.g. supply side)

- : "reverse flow" where noise & airflow move in opposite directions (e.g. return side)

See Silencer Selection Instructions. DIL above 50dB may be limited due to noise flanking around the silencer or along the duct walls. If more than 50dB DIL is required, contact your local Vibro-Acoustics Representative or call **1-800-565-8401**.

Length (in.)	Face Velocity (ft. per min)	Octave Band - Hz/Dynamic Insertion Loss (dB)							
		63	125	250	500	1000	2000	4000	8000
36	- 1250	3	5	17	16	12	10	9	10
	0	1	4	12	11	9	9	8	8
	+ 1250	3	5	15	15	10	9	8	6
60	- 1250	8	8	20	18	13	12	11	10
	0	4	5	13	13	11	10	9	8
	+ 1250	4	7	18	17	12	11	9	7
84	- 1250	9	10	23	22	15	13	12	11
	0	6	6	15	15	12	11	10	9
	+ 1250	6	8	21	21	14	12	10	9
108	- 1250	11	12	26	26	16	14	13	11
	0	9	7	16	17	14	12	12	10
	+ 1250	8	10	23	25	16	13	12	10

Pressure Drop (PD)

Pressure drops are reported in accordance with ASTM E477 methods and are based upon **ideal** flow conditions (5 diameters of straight duct on silencer inlet and 10 on outlet). Less than ideal conditions will result in an increase in pressure drop due to System Effects. See Silencer System Effects Data.

Length (in.)	Face Velocity (ft. per min) / Pressure Drop (in.w.g.)						
	500	750	1000	1250	1500	1750	2000
36	0.04	0.08	0.15	0.24	0.34	0.46	0.60
60	0.04	0.08	0.15	0.23	0.33	0.45	0.58
84	0.04	0.09	0.15	0.24	0.35	0.47	0.62
108	0.04	0.09	0.16	0.25	0.36	0.50	0.65

☐ Acceptable (0 - 0.35") ☐ Caution (>0.35") Pressure Drop may be too high for certain applications

Generated Noise (GN)

@ 5 sq.ft. face area

Length (in.)	Face Velocity (ft. per min)	Octave Band - Hz/Generated Noise (dB re 10^{-12} watts)							
		63	125	250	500	1K	2K	4K	8K
All	- 1250	55	53	51	50	55	61	57	45
	- 750	50	43	43	46	50	52	42	30
	+ 750	47	41	38	40	50	49	42	31
	+ 1250	56	54	47	45	55	59	58	48

GN correction chart at right must be used to correct GN to other face areas. →

Face Area (sq.ft.)	2.5	5	10	20	40	80
dB	-3	0	+3	+6	+9	+12

Cross Section Sizes*
"A" dimension (in.)
15-16
29-32
58-64
87-96
116-128
145-160
174-192
203-224
232-240
"B" dimension
ANY SIZE
Approx. weight
4.1 lbs/cu.ft.
See Rectangular Silencer Cross-Section Dimensions to ensure selection matches ductwork dimensions.

CERTIFIED PERFORMANCE DATA

VIBRO-ACOUSTICS®
A Swegon Group company

RNM-MV-F2

Rectangular No-Media
Medium velocity silencer
(<1250 fpm)

How to Specify Example:

27 X **22** **RNM-MV-F2** X **60**

Duct Width | Duct Height | Silencer Model | Silencer Length

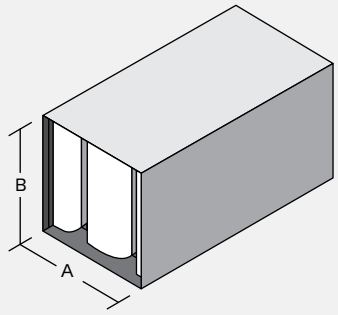

Insertion Loss (IL)

+ : "forward flow" where noise & airflow move in same direction (e.g. supply side)

- : "reverse flow" where noise & airflow move in opposite directions (e.g. return side)

See Silencer Selection Instructions. DIL above 50dB may be limited due to noise flanking around the silencer or along the duct walls. If more than 50dB DIL is required, contact your local Vibro-Acoustics Representative or call **1-800-565-8401**.

Length (in.)	Face Velocity (ft. per min)	Octave Band - Hz/Dynamic Insertion Loss (dB)							
		63	125	250	500	1000	2000	4000	8000
36	- 1250	4	5	16	16	11	10	9	9
	0	3	4	11	12	9	9	8	8
	+ 1250	4	5	14	15	10	9	8	7
60	- 1250	9	8	19	18	13	12	10	9
	0	6	5	12	14	10	10	9	8
	+ 1250	6	7	17	18	12	11	9	8
84	- 1250	10	10	21	21	14	13	11	10
	0	7	6	13	16	12	11	10	9
	+ 1250	8	8	19	21	14	12	11	9
108	- 1250	12	12	23	24	15	14	12	10
	0	9	8	15	18	13	12	11	10
	+ 1250	8	10	21	24	15	13	12	10

Pressure Drop (PD)

Pressure drops are reported in accordance with ASTM E477 methods and are based upon **ideal** flow conditions (5 diameters of straight duct on silencer inlet and 10 on outlet). Less than ideal conditions will result in an increase in pressure drop due to System Effects. See Silencer System Effects Data.

Length (in.)	Face Velocity (ft. per min) / Pressure Drop (in.w.g.)						
	500	750	1000	1250	1500	1750	2000
36	0.04	0.08	0.15	0.23	0.33	0.45	0.58
60	0.04	0.08	0.14	0.22	0.32	0.43	0.56
84	0.04	0.09	0.16	0.24	0.35	0.48	0.62
108	0.04	0.09	0.16	0.25	0.36	0.48	0.63

☐ Acceptable (0 - 0.35") ☐ Caution (>0.35") Pressure Drop may be too high for certain applications

Generated Noise (GN)

@ 5 sq.ft. face area

Length (in.)	Face Velocity (ft. per min)	Octave Band - Hz/Generated Noise (dB re 10^{-12} watts)							
		63	125	250	500	1K	2K	4K	8K
All	- 1250	55	53	51	50	56	62	58	46
	- 750	49	43	43	46	51	53	43	31
	+ 750	47	41	39	41	50	50	42	32
	+ 1250	56	54	47	46	55	59	58	49

GN correction chart at right must be used to correct GN to other face areas. →

Face Area (sq.ft.)	2.5	5	10	20	40	80
dB	-3	0	+3	+6	+9	+12

Cross Section Sizes*

"A" dimension (in.)
14
27-28
54-57
81-86
108-115
135-144
162-173
189-202
216-231

"B" dimension
ANY SIZE

Approx. weight
4.0 lbs/cu.ft.

See Rectangular Silencer Cross-Section Dimensions to ensure selection matches ductwork dimensions.

CERTIFIED PERFORMANCE DATA

VIBRO-ACOUSTICS®
A Swegon Group company

RNM-MV-F3

Rectangular No-Media
Medium velocity silencer
(<1250 fpm)

How to Specify Example:

25 X **21** **RNM-MV-F3** X **60**

Duct Width | Duct Height | Silencer Model | Silencer Length

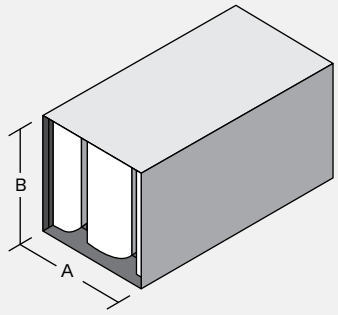

Insertion Loss (IL)

+ : "forward flow" where noise & airflow move in same direction (e.g. supply side)

- : "reverse flow" where noise & airflow move in opposite directions (e.g. return side)

See Silencer Selection Instructions. DIL above 50dB may be limited due to noise flanking around the silencer or along the duct walls. If more than 50dB DIL is required, contact your local Vibro-Acoustics Representative or call **1-800-565-8401**.

Length (in.)	Face Velocity (ft. per min)	Octave Band - Hz/Dynamic Insertion Loss (dB)							
		63	125	250	500	1000	2000	4000	8000
36	- 1250	6	6	14	16	11	10	8	8
	0	4	4	10	13	9	9	8	8
	+ 1250	5	5	12	16	10	10	8	7
60	- 1250	11	8	17	18	12	11	9	8
	0	7	5	11	15	10	10	9	7
	+ 1250	7	7	15	18	12	11	9	8
84	- 1250	11	10	18	21	13	12	10	9
	0	7	6	12	16	11	11	10	8
	+ 1250	9	9	17	21	13	13	11	9
108	- 1250	12	12	21	23	15	13	11	10
	0	9	8	13	18	13	12	11	10
	+ 1250	9	11	19	22	15	14	12	10

Pressure Drop (PD)

Pressure drops are reported in accordance with ASTM E477 methods and are based upon **ideal** flow conditions (5 diameters of straight duct on silencer inlet and 10 on outlet). Less than ideal conditions will result in an increase in pressure drop due to System Effects. See Silencer System Effects Data.

Length (in.)	Face Velocity (ft. per min) / Pressure Drop (in.w.g.)						
	500	750	1000	1250	1500	1750	2000
36	0.04	0.08	0.14	0.22	0.32	0.43	0.56
60	0.03	0.08	0.14	0.21	0.30	0.41	0.54
84	0.04	0.09	0.16	0.25	0.36	0.48	0.63
108	0.04	0.09	0.15	0.24	0.35	0.47	0.62

☐ Acceptable (0 - 0.35") ☐ Caution (>0.35") Pressure Drop may be too high for certain applications

Generated Noise (GN)

@ 5 sq.ft. face area

Length (in.)	Face Velocity (ft. per min)	Octave Band - Hz/Generated Noise (dB re 10^{-12} watts)							
		63	125	250	500	1K	2K	4K	8K
All	- 1250	55	53	51	50	57	62	58	47
	- 750	49	43	43	47	52	53	44	31
	+ 750	47	41	39	42	50	50	43	32
	+ 1250	56	53	47	46	55	60	58	49

GN correction chart at right must be used to correct GN to other face areas. →

Face Area (sq.ft.)	2.5	5	10	20	40	80
dB	-3	0	+3	+6	+9	+12

Cross Section Sizes*

"A" dimension (in.)
13
25-26
50-53
75-80
100-107
125-134
150-161
175-188
200-215
225-240

"B" dimension
ANY SIZE

Approx. weight
4.2 lbs/cu.ft.

See Rectangular Silencer Cross-Section Dimensions to ensure selection matches ductwork dimensions.

CERTIFIED PERFORMANCE DATA

VIBRO-ACOUSTICS®
A Swegon Group company

RNM-MV-F4

Rectangular No-Media
Medium velocity silencer
(<1250 fpm)

How to Specify Example:

47 X **22** **RNM-MV-F4** X **60**

Duct Width	Duct Height	Silencer Model	Silencer Length

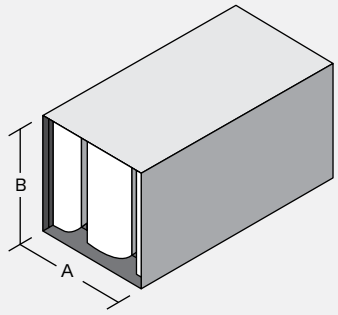

Insertion Loss (IL)

+ : "forward flow" where noise & airflow move in same direction (e.g. supply side)

- : "reverse flow" where noise & airflow move in opposite directions (e.g. return side)

See Silencer Selection Instructions. DIL above 50dB may be limited due to noise flanking around the silencer or along the duct walls. If more than 50dB DIL is required, contact your local Vibro-Acoustics Representative or call **1-800-565-8401**.

Length (in.)	Face Velocity (ft. per min)	Octave Band - Hz/Dynamic Insertion Loss (dB)							
		63	125	250	500	1000	2000	4000	8000
36	- 1250	8	6	13	16	10	9	7	7
	0	6	4	9	14	8	9	8	8
	+ 1250	6	5	11	16	10	10	8	7
60	- 1250	13	9	16	19	12	11	9	7
	0	9	5	11	16	10	10	9	7
	+ 1250	8	7	14	18	12	12	9	8
84	- 1250	12	11	16	20	13	12	9	8
	0	7	7	10	17	11	11	10	8
	+ 1250	10	9	15	20	13	13	11	10
108	- 1250	13	12	18	21	14	13	10	9
	0	9	8	11	18	12	12	10	10
	+ 1250	9	11	17	21	14	14	12	11

Pressure Drop (PD)

Pressure drops are reported in accordance with ASTM E477 methods and are based upon **ideal** flow conditions (5 diameters of straight duct on silencer inlet and 10 on outlet). Less than ideal conditions will result in an increase in pressure drop due to System Effects. See Silencer System Effects Data.

Length (in.)	Face Velocity (ft. per min) / Pressure Drop (in.w.g.)						
	500	750	1000	1250	1500	1750	2000
36	0.03	0.08	0.14	0.21	0.30	0.41	0.54
60	0.03	0.07	0.13	0.20	0.29	0.40	0.52
84	0.04	0.09	0.16	0.25	0.36	0.49	0.64
108	0.04	0.08	0.15	0.23	0.34	0.46	0.60

☐ Acceptable (0 - 0.35") ☐ Caution (>0.35") Pressure Drop may be too high for certain applications

Generated Noise (GN)

@ 5 sq.ft. face area

Length (in.)	Face Velocity (ft. per min)	Octave Band - Hz/Generated Noise (dB re 10^{-12} watts)							
		63	125	250	500	1K	2K	4K	8K
All	- 1250	55	52	50	51	57	63	59	47
	- 750	49	43	43	47	53	54	44	31
	+ 750	47	41	39	42	50	50	43	32
	+ 1250	56	53	47	47	55	60	59	50

GN correction chart at right must be used to correct GN to other face areas. →

Face Area (sq.ft.)	2.5	5	10	20	40	80
dB	-3	0	+3	+6	+9	+12

Cross Section Sizes*

"A" dimension (in.)
12
23-24
46-49
69-74
92-99
115-124
138-149
161-174
184-199
207-224
230-240

"B" dimension
ANY SIZE

Approx. weight
4.3 lbs/cu.ft.

See Rectangular Silencer Cross-Section Dimensions to ensure selection matches ductwork dimensions.

CERTIFIED PERFORMANCE DATA

VIBRO-ACOUSTICS®
A Swegon Group company

RNM-MV-F5

Rectangular No-Media
Medium velocity silencer
(<1250 fpm)

How to Specify Example:

44 X **22** **RNM-MV-F5** X **60**

Duct Width | Duct Height | Silencer Model | Silencer Length

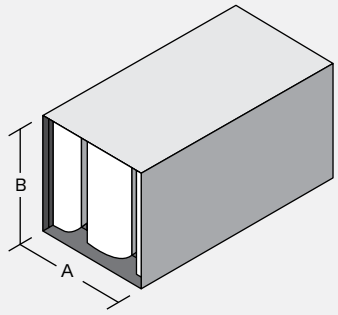

Insertion Loss (IL)

+ : "forward flow" where noise & airflow move in same direction (e.g. supply side)

- : "reverse flow" where noise & airflow move in opposite directions (e.g. return side)

See Silencer Selection Instructions. DIL above 50dB may be limited due to noise flanking around the silencer or along the duct walls. If more than 50dB DIL is required, contact your local Vibro-Acoustics Representative or call **1-800-565-8401**.

Length (in.)	Face Velocity (ft. per min)	Octave Band - Hz/Dynamic Insertion Loss (dB)							
		63	125	250	500	1000	2000	4000	8000
36	- 1250	7	6	12	16	12	10	8	7
	0	6	4	9	14	10	9	8	8
	+ 1250	6	5	11	16	12	10	8	8
60	- 1250	12	9	15	18	14	12	9	7
	0	8	5	10	15	12	11	9	8
	+ 1250	7	7	13	18	14	12	10	9
84	- 1250	12	10	16	19	15	12	9	8
	0	7	6	9	16	13	12	10	8
	+ 1250	10	8	14	19	15	14	11	10
108	- 1250	13	11	18	20	16	14	10	9
	0	9	7	11	17	14	13	11	10
	+ 1250	9	10	16	20	16	15	12	11

Pressure Drop (PD)

Pressure drops are reported in accordance with ASTM E477 methods and are based upon **ideal** flow conditions (5 diameters of straight duct on silencer inlet and 10 on outlet). Less than ideal conditions will result in an increase in pressure drop due to System Effects. See Silencer System Effects Data.

Length (in.)	Face Velocity (ft. per min) / Pressure Drop (in.w.g.)						
	500	750	1000	1250	1500	1750	2000
36	0.03	0.08	0.14	0.21	0.31	0.42	0.55
60	0.03	0.07	0.13	0.21	0.30	0.40	0.53
84	0.04	0.09	0.16	0.24	0.35	0.47	0.62
108	0.04	0.09	0.15	0.24	0.34	0.46	0.61

☐ Acceptable (0 - 0.35") ☐ Caution (>0.35") Pressure Drop may be too high for certain applications

Generated Noise (GN)

@ 5 sq.ft. face area

Length (in.)	Face Velocity (ft. per min)	Octave Band - Hz/Generated Noise (dB re 10^{-12} watts)							
		63	125	250	500	1K	2K	4K	8K
All	- 1250	55	52	50	51	58	63	60	48
	- 750	48	43	43	48	54	54	45	31
	+ 750	47	41	39	43	51	50	43	32
	+ 1250	56	53	47	47	55	60	59	50

GN correction chart at right must be used to correct GN to other face areas. →

Face Area (sq.ft.)	2.5	5	10	20	40	80
dB	-3	0	+3	+6	+9	+12

Cross Section Sizes*
"A" dimension (in.)
11
21-22
42-45
63-68
84-91
105-114
126-137
147-160
168-183
189-206
210-229
231-240
"B" dimension
ANY SIZE
Approx. weight
4.5 lbs/cu.ft.
See Rectangular Silencer Cross-Section Dimensions to ensure selection matches ductwork dimensions.

CERTIFIED PERFORMANCE DATA

VIBRO-ACOUSTICS®
A Swegon Group company

RNM-MV-F6

Rectangular No-Media
Medium velocity silencer
(<1250 fpm)

How to Specify Example:

40 X **21** **RNM-MV-F6** X **60**

Duct Width | Duct Height | Silencer Model | Silencer Length

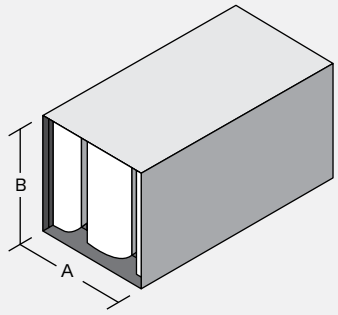

Insertion Loss (IL)

+ : "forward flow" where noise & airflow move in same direction (e.g. supply side)

- : "reverse flow" where noise & airflow move in opposite directions (e.g. return side)

See Silencer Selection Instructions. DIL above 50dB may be limited due to noise flanking around the silencer or along the duct walls. If more than 50dB DIL is required, contact your local Vibro-Acoustics Representative or call **1-800-565-8401**.

Length (in.)	Face Velocity (ft. per min)	Octave Band - Hz/Dynamic Insertion Loss (dB)							
		63	125	250	500	1000	2000	4000	8000
36	- 1250	7	6	12	16	14	10	8	7
	0	5	4	8	14	12	10	8	8
	+ 1250	6	5	10	15	14	11	9	8
60	- 1250	11	9	15	18	16	12	9	8
	0	7	5	10	15	14	11	9	8
	+ 1250	7	7	13	17	16	12	10	9
84	- 1250	11	9	15	19	16	13	9	8
	0	7	6	9	16	15	12	10	9
	+ 1250	10	8	13	19	17	14	11	10
108	- 1250	13	11	17	20	18	15	11	9
	0	9	7	10	16	15	14	11	10
	+ 1250	9	10	15	19	18	16	12	11

Pressure Drop (PD)

Pressure drops are reported in accordance with ASTM E477 methods and are based upon **ideal** flow conditions (5 diameters of straight duct on silencer inlet and 10 on outlet). Less than ideal conditions will result in an increase in pressure drop due to System Effects. See Silencer System Effects Data.

Length (in.)	Face Velocity (ft. per min) / Pressure Drop (in.w.g.)						
	500	750	1000	1250	1500	1750	2000
36	0.03	0.08	0.14	0.22	0.31	0.42	0.55
60	0.03	0.08	0.13	0.21	0.30	0.41	0.53
84	0.04	0.08	0.15	0.23	0.34	0.46	0.60
108	0.04	0.09	0.15	0.24	0.35	0.47	0.61

☐ Acceptable (0 - 0.35") ☐ Caution (>0.35") Pressure Drop may be too high for certain applications

Generated Noise (GN)

@ 5 sq.ft. face area

Length (in.)	Face Velocity (ft. per min)	Octave Band - Hz/Generated Noise (dB re 10^{-12} watts)							
		63	125	250	500	1K	2K	4K	8K
All	- 1250	55	52	50	51	59	63	60	49
	- 750	48	43	43	48	55	54	45	31
	+ 750	47	41	39	44	51	51	43	32
	+ 1250	57	53	47	47	55	60	59	50

GN correction chart at right must be used to correct GN to other face areas. →

Face Area (sq.ft.)	2.5	5	10	20	40	80
dB	-3	0	+3	+6	+9	+12

Cross Section Sizes*
"A" dimension (in.)
10
19-20
38-41
57-62
76-83
95-104
114-125
133-146
152-167
171-188
190-240
"B" dimension
ANY SIZE
Approx. weight
4.7 lbs/cu.ft.
See Rectangular Silencer Cross-Section Dimensions to ensure selection matches ductwork dimensions.

CERTIFIED PERFORMANCE DATA

VIBRO-ACOUSTICS®
A Swegon Group company

RNM-MV-F7

Rectangular No-Media
Medium velocity silencer
(<1250 fpm)

How to Specify Example:

37 X **21** **RNM-MV-F7** X **60**

Duct Width | Duct Height | Silencer Model | Silencer Length

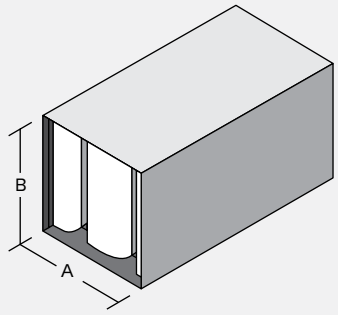

Insertion Loss (IL)

+ : "forward flow" where noise & airflow move in same direction (e.g. supply side)

- : "reverse flow" where noise & airflow move in opposite directions (e.g. return side)

See Silencer Selection Instructions. DIL above 50dB may be limited due to noise flanking around the silencer or along the duct walls. If more than 50dB DIL is required, contact your local Vibro-Acoustics Representative or call **1-800-565-8401**.

Length (in.)	Face Velocity (ft. per min)	Octave Band - Hz/Dynamic Insertion Loss (dB)							
		63	125	250	500	1000	2000	4000	8000
36	- 1250	7	6	12	16	16	11	8	7
	0	5	4	8	13	13	10	8	8
	+ 1250	5	4	10	15	16	11	9	8
60	- 1250	10	8	14	18	18	12	9	8
	0	6	5	9	15	16	11	9	8
	+ 1250	6	7	12	17	18	13	10	9
84	- 1250	11	9	14	18	18	13	9	8
	0	7	5	8	15	17	13	10	9
	+ 1250	9	7	13	18	18	14	11	10
108	- 1250	13	10	16	19	19	15	11	9
	0	9	6	9	15	17	15	11	10
	+ 1250	9	9	14	18	19	17	13	11

Pressure Drop (PD)

Pressure drops are reported in accordance with ASTM E477 methods and are based upon **ideal** flow conditions (5 diameters of straight duct on silencer inlet and 10 on outlet). Less than ideal conditions will result in an increase in pressure drop due to System Effects. See Silencer System Effects Data.

Length (in.)	Face Velocity (ft. per min) / Pressure Drop (in.w.g.)						
	500	750	1000	1250	1500	1750	2000
36	0.04	0.08	0.14	0.22	0.32	0.43	0.56
60	0.03	0.08	0.14	0.21	0.30	0.41	0.54
84	0.04	0.08	0.15	0.23	0.33	0.44	0.58
108	0.04	0.09	0.16	0.24	0.35	0.47	0.62

☐ Acceptable (0 - 0.35") ☐ Caution (>0.35") Pressure Drop may be too high for certain applications

Generated Noise (GN)

@ 5 sq.ft. face area

Length (in.)	Face Velocity (ft. per min)	Octave Band - Hz/Generated Noise (dB re 10^{-12} watts)							
		63	125	250	500	1K	2K	4K	8K
All	- 1250	55	51	49	52	59	64	61	50
	- 750	48	43	43	49	56	55	46	32
	+ 750	47	41	39	44	51	51	44	32
	+ 1250	57	52	47	48	55	61	59	51

GN correction chart at right must be used to correct GN to other face areas. →

Face Area (sq.ft.)	2.5	5	10	20	40	80
dB	-3	0	+3	+6	+9	+12

Cross Section Sizes*
"A" dimension (in.)
9
17-18
33-37
50-56
66-75
83-94
99-113
116-240
"B" dimension
ANY SIZE
Approx. weight
4.9 lbs/cu.ft.
See Rectangular Silencer Cross-Section Dimensions to ensure selection matches ductwork dimensions.

CERTIFIED PERFORMANCE DATA

VIBRO-ACOUSTICS®
A Swegon Group company

RNM-MV-F8

Rectangular No-Media
Medium velocity silencer
(<1250 fpm)

How to Specify Example:

14 X **22** **RNM-MV-F8** X **60**

Duct Width | Duct Height | Silencer Model | Silencer Length

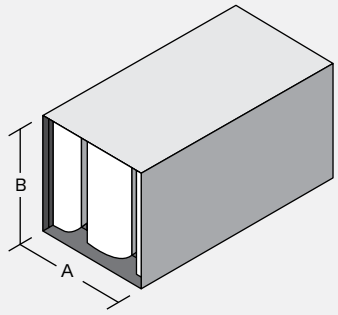

Insertion Loss (IL)

+ : "forward flow" where noise & airflow move in same direction (e.g. supply side)

- : "reverse flow" where noise & airflow move in opposite directions (e.g. return side)

See Silencer Selection Instructions. DIL above 50dB may be limited due to noise flanking around the silencer or along the duct walls. If more than 50dB DIL is required, contact your local Vibro-Acoustics Representative or call **1-800-565-8401**.

Length (in.)	Face Velocity (ft. per min)	Octave Band - Hz/Dynamic Insertion Loss (dB)							
		63	125	250	500	1000	2000	4000	8000
36	- 1250	5	6	12	22	17	10	10	10
	0	2	3	8	19	10	8	10	9
	+ 1250	2	5	10	21	16	9	10	8
60	- 1250	7	9	14	24	19	12	12	11
	0	2	5	9	20	14	11	11	10
	+ 1250	1	7	12	22	19	11	11	9
84	- 1250	9	10	14	25	23	14	13	12
	0	4	6	9	21	17	12	11	10
	+ 1250	4	8	12	23	22	13	12	10
108	- 1250	10	10	15	25	26	16	14	12
	0	6	6	9	21	20	13	12	11
	+ 1250	7	8	13	24	25	15	13	11

Pressure Drop (PD)

Pressure drops are reported in accordance with ASTM E477 methods and are based upon **ideal** flow conditions (5 diameters of straight duct on silencer inlet and 10 on outlet). Less than ideal conditions will result in an increase in pressure drop due to System Effects. See Silencer System Effects Data.

Length (in.)	Face Velocity (ft. per min) / Pressure Drop (in.w.g.)						
	500	750	1000	1250	1500	1750	2000
36	0.04	0.08	0.15	0.24	0.34	0.46	0.60
60	0.04	0.08	0.15	0.23	0.33	0.45	0.58
84	0.04	0.08	0.15	0.24	0.34	0.46	0.60
108	0.04	0.09	0.16	0.24	0.35	0.47	0.62

☐ Acceptable (0 - 0.35") ☐ Caution (>0.35") Pressure Drop may be too high for certain applications

Generated Noise (GN)

@ 5 sq.ft. face area

Length (in.)	Face Velocity (ft. per min)	Octave Band - Hz/Generated Noise (dB re 10^{-12} watts)							
		63	125	250	500	1K	2K	4K	8K
All	- 1250	55	51	49	52	59	64	61	50
	- 750	48	43	43	49	56	55	46	32
	+ 750	47	41	39	44	51	51	44	32
	+ 1250	57	52	47	48	55	61	59	51

GN correction chart at right must be used to correct GN to other face areas. →

Face Area (sq.ft.)	2.5	5	10	20	40	80
dB	-3	0	+3	+6	+9	+12

Cross Section Sizes*
"A" dimension (in.) 7-8 14-16 27-32 41-49 54-65 68-240
"B" dimension ANY SIZE
Approx. weight 5.5 lbs/cu.ft.
See Rectangular Silencer Cross-Section Dimensions to ensure selection matches ductwork dimensions.

CERTIFIED PERFORMANCE DATA

VIBRO-ACOUSTICS®
A Swegon Group company

RNM-MV-F9

Rectangular No-Media
Medium velocity silencer
(<1250 fpm)

How to Specify Example:

21 X **21** **RNM-MV-F9** X **60**

Duct Width | Duct Height | Silencer Model | Silencer Length

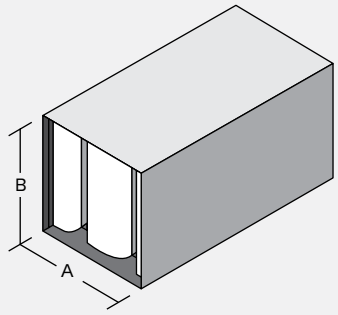

Insertion Loss (IL)

+ : "forward flow" where noise & airflow move in same direction (e.g. supply side)

- : "reverse flow" where noise & airflow move in opposite directions (e.g. return side)

See Silencer Selection Instructions. DIL above 50dB may be limited due to noise flanking around the silencer or along the duct walls. If more than 50dB DIL is required, contact your local Vibro-Acoustics Representative or call **1-800-565-8401**.

Length (in.)	Face Velocity (ft. per min)	Octave Band - Hz/Dynamic Insertion Loss (dB)							
		63	125	250	500	1000	2000	4000	8000
36	- 1250	6	6	11	15	22	12	8	7
	0	4	3	7	12	18	10	9	8
	+ 1250	4	4	9	14	21	12	10	9
60	- 1250	7	8	13	17	24	14	10	8
	0	4	5	8	14	22	13	10	9
	+ 1250	4	6	11	16	24	14	11	10
84	- 1250	10	7	12	16	24	15	9	8
	0	7	3	7	13	23	14	10	10
	+ 1250	8	5	10	15	24	15	11	11
108	- 1250	13	9	14	17	24	18	12	10
	0	8	5	8	13	23	18	12	11
	+ 1250	10	7	11	16	24	20	13	12

Pressure Drop (PD)

Pressure drops are reported in accordance with ASTM E477 methods and are based upon **ideal** flow conditions (5 diameters of straight duct on silencer inlet and 10 on outlet). Less than ideal conditions will result in an increase in pressure drop due to System Effects. See Silencer System Effects Data.

Length (in.)	Face Velocity (ft. per min) / Pressure Drop (in.w.g.)						
	500	750	1000	1250	1500	1750	2000
36	0.04	0.08	0.15	0.23	0.33	0.44	0.58
60	0.04	0.08	0.14	0.22	0.32	0.43	0.56
84	0.03	0.07	0.13	0.20	0.29	0.40	0.52
108	0.04	0.09	0.16	0.25	0.36	0.49	0.64

☐ Acceptable (0 - 0.35") ☐ Caution (>0.35") Pressure Drop may be too high for certain applications

Cross Section Sizes*
"A" dimension (in.) 6 10-13 20-26 30-240
"B" dimension ANY SIZE
Approx. weight 6.2 lbs/cu.ft.
See Rectangular Silencer Cross-Section Dimensions to ensure selection matches ductwork dimensions.

Generated Noise (GN)

@ 5 sq.ft. face area

Length (in.)	Face Velocity (ft. per min)	Octave Band - Hz/Generated Noise (dB re 10^{-12} watts)							
		63	125	250	500	1K	2K	4K	8K
All	- 1250	55	51	48	52	62	65	63	52
	- 750	47	42	43	50	58	56	47	32
	+ 750	47	41	39	46	51	52	45	32
	+ 1250	57	52	47	49	55	61	60	52

GN correction chart at right must be used to correct GN to other face areas. →

Face Area (sq.ft.)	2.5	5	10	20	40	80
dB	-3	0	+3	+6	+9	+12

CERTIFIED PERFORMANCE DATA

VIBRO-ACOUSTICS®
A Swegon Group company

RNM-HV-F1

Rectangular No-Media
High velocity silencer
(<2000 fpm)

How to Specify Example:

32 X **21** **RNM-HV-F1** X **60**

Duct Width	Duct Height	Silencer Model	Silencer Length

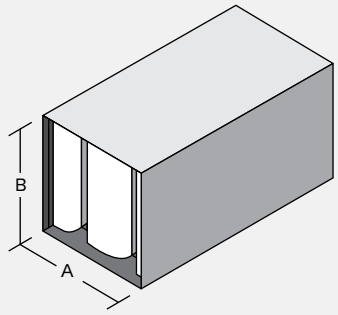

Insertion Loss (IL)

+ : "forward flow" where noise & airflow move in same direction (e.g. supply side)

- : "reverse flow" where noise & airflow move in opposite directions (e.g. return side)

See Silencer Selection Instructions. DIL above 50dB may be limited due to noise flanking around the silencer or along the duct walls. If more than 50dB DIL is required, contact your local Vibro-Acoustics Representative or call **1-800-565-8401**.

Length (in.)	Face Velocity (ft. per min)	Octave Band - Hz/Dynamic Insertion Loss (dB)							
		63	125	250	500	1000	2000	4000	8000
36	- 2000	5	6	15	16	10	10	10	10
	0	1	3	9	11	7	7	6	5
	+ 2000	1	3	12	15	9	8	7	5
60	- 2000	6	7	18	19	12	11	10	10
	0	0	4	11	12	8	8	7	6
	+ 2000	1	6	15	18	11	10	8	6
84	- 2000	8	9	21	22	13	12	11	10
	0	4	5	12	15	10	10	9	7
	+ 2000	4	7	18	22	12	11	9	6
108	- 2000	10	10	24	27	14	12	11	10
	0	8	6	14	17	11	11	10	9
	+ 2000	6	7	21	26	13	12	10	7

Pressure Drop (PD)

Pressure drops are reported in accordance with ASTM E477 methods and are based upon **ideal** flow conditions (5 diameters of straight duct on silencer inlet and 10 on outlet). Less than ideal conditions will result in an increase in pressure drop due to System Effects. See Silencer System Effects Data.

Length (in.)	Face Velocity (ft. per min) / Pressure Drop (in.w.g.)						
	500	1000	1500	1750	2000	2250	2500
36	0.02	0.07	0.15	0.20	0.26	0.33	0.41
60	0.02	0.07	0.16	0.21	0.28	0.35	0.44
84	0.02	0.07	0.16	0.21	0.28	0.35	0.44
108	0.02	0.07	0.16	0.21	0.28	0.35	0.44

☐ Acceptable (0 - 0.35") ☐ Caution (>0.35") Pressure Drop may be too high for certain applications

Generated Noise (GN)

@ 5 sq.ft. face area

Length (in.)	Face Velocity (ft. per min)	Octave Band - Hz/Generated Noise (dB re 10^{-12} watts)							
		63	125	250	500	1K	2K	4K	8K
All	- 2000	57	58	55	54	59	65	63	53
	- 1250	51	49	48	48	55	57	50	34
	+ 1250	56	49	43	43	54	56	51	37
	+ 2000	59	58	52	50	57	65	65	57

GN correction chart at right must be used to correct GN to other face areas. →

Face Area (sq.ft.)	2.5	5	10	20	40	80
dB	-3	0	+3	+6	+9	+12

Cross Section Sizes*

"A" dimension (in.)
15-16
29-32
58-64
87-96
116-128
145-160
174-192
203-224
232-240

"B" dimension
ANY SIZE

Approx. weight
3.8 lbs/cu.ft.

See Rectangular Silencer Cross-Section Dimensions to ensure selection matches ductwork dimensions.

CERTIFIED PERFORMANCE DATA

VIBRO-ACOUSTICS®
A Swegon Group company

RNM-HV-F2

Rectangular No-Media
High velocity silencer
(<2000 fpm)

How to Specify Example:

27 X **22** **RNM-HV-F2** X **60**

Duct Width	Duct Height	Silencer Model	Silencer Length

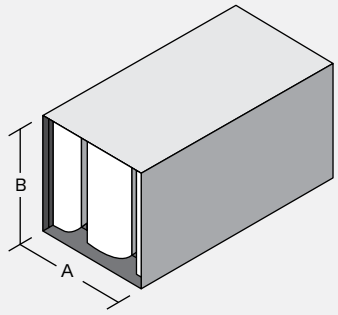

Insertion Loss (IL)

+ : "forward flow" where noise & airflow move in same direction (e.g. supply side)

- : "reverse flow" where noise & airflow move in opposite directions (e.g. return side)

See Silencer Selection Instructions. DIL above 50dB may be limited due to noise flanking around the silencer or along the duct walls. If more than 50dB DIL is required, contact your local Vibro-Acoustics Representative or call **1-800-565-8401**.

Length (in.)	Face Velocity (ft. per min)	Octave Band - Hz/Dynamic Insertion Loss (dB)							
		63	125	250	500	1000	2000	4000	8000
36	- 2000	5	5	13	15	10	9	8	8
	0	1	3	9	11	7	7	6	6
	+ 2000	1	4	11	14	9	8	7	5
60	- 2000	6	7	16	18	11	10	9	8
	0	1	5	10	13	9	8	7	6
	+ 2000	2	6	14	17	11	10	8	6
84	- 2000	8	9	19	21	12	11	10	9
	0	4	5	11	15	9	9	9	7
	+ 2000	4	7	16	21	12	11	9	7
108	- 2000	11	11	22	25	13	12	10	8
	0	8	6	12	17	10	10	9	8
	+ 2000	7	8	18	24	13	12	10	7

Pressure Drop (PD)

Pressure drops are reported in accordance with ASTM E477 methods and are based upon **ideal** flow conditions (5 diameters of straight duct on silencer inlet and 10 on outlet). Less than ideal conditions will result in an increase in pressure drop due to System Effects. See Silencer System Effects Data.

Length (in.)	Face Velocity (ft. per min) / Pressure Drop (in.w.g.)						
	500	1000	1500	1750	2000	2250	2500
36	0.02	0.07	0.15	0.20	0.26	0.33	0.41
60	0.02	0.07	0.16	0.21	0.28	0.35	0.44
84	0.02	0.07	0.17	0.22	0.29	0.37	0.46
108	0.02	0.07	0.16	0.22	0.29	0.36	0.45

☐ Acceptable (0 - 0.35") ☐ Caution (>0.35") Pressure Drop may be too high for certain applications

Cross Section Sizes*

"A" dimension (in.)
14
27-28
54-57
81-86
108-115
134-144
162-173
189-202
216-231

"B" dimension
ANY SIZE

Approx. weight
3.9 lbs/cu.ft.

See Rectangular Silencer Cross-Section Dimensions to ensure selection matches ductwork dimensions.

Generated Noise (GN)

@ 5 sq.ft. face area

Length (in.)	Face Velocity (ft. per min)	Octave Band - Hz/Generated Noise (dB re 10^{-12} watts)							
		63	125	250	500	1K	2K	4K	8K
All	- 2000	58	58	55	54	59	64	63	53
	- 1250	52	49	47	49	54	56	49	34
	+ 1250	56	49	43	44	54	56	51	37
	+ 2000	59	58	52	51	57	64	65	57

GN correction chart at right must be used to correct GN to other face areas. →

Face Area (sq.ft.)	2.5	5	10	20	40	80
dB	-3	0	+3	+6	+9	+12

CERTIFIED PERFORMANCE DATA

VIBRO-ACOUSTICS®
A Swegon Group company

RNM-HV-F3

Rectangular No-Media
High velocity silencer
(<2000 fpm)

How to Specify Example:

25 X **21** **RNM-HV-F3** X **60**

Duct Width	Duct Height	Silencer Model	Silencer Length

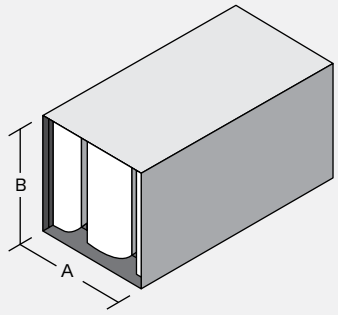

Insertion Loss (IL)

+ : "forward flow" where noise & airflow move in same direction (e.g. supply side)

- : "reverse flow" where noise & airflow move in opposite directions (e.g. return side)

See Silencer Selection Instructions. DIL above 50dB may be limited due to noise flanking around the silencer or along the duct walls. If more than 50dB DIL is required, contact your local Vibro-Acoustics Representative or call **1-800-565-8401**.

Length (in.)	Face Velocity (ft. per min)	Octave Band - Hz/Dynamic Insertion Loss (dB)							
		63	125	250	500	1000	2000	4000	8000
36	- 2000	6	5	12	15	10	9	7	6
	0	2	3	8	12	7	7	6	6
	+ 2000	2	4	10	14	9	8	7	5
60	- 2000	7	7	14	17	11	9	7	7
	0	2	5	9	14	9	8	7	6
	+ 2000	3	6	12	17	11	10	8	6
84	- 2000	9	10	16	20	12	11	9	8
	0	5	6	9	15	9	9	9	7
	+ 2000	5	7	14	20	12	11	9	8
108	- 2000	11	11	19	22	13	11	9	7
	0	9	6	11	16	10	10	9	8
	+ 2000	8	8	16	21	13	11	10	8

Pressure Drop (PD)

Pressure drops are reported in accordance with ASTM E477 methods and are based upon **ideal** flow conditions (5 diameters of straight duct on silencer inlet and 10 on outlet). Less than ideal conditions will result in an increase in pressure drop due to System Effects. See Silencer System Effects Data.

Length (in.)	Face Velocity (ft. per min) / Pressure Drop (in.w.g.)						
	500	1000	1500	1750	2000	2250	2500
36	0.02	0.07	0.15	0.20	0.26	0.33	0.41
60	0.02	0.07	0.16	0.21	0.28	0.35	0.44
84	0.02	0.08	0.17	0.23	0.31	0.39	0.48
108	0.02	0.07	0.17	0.22	0.29	0.37	0.46

☐ Acceptable (0 - 0.35") ☐ Caution (>0.35") Pressure Drop may be too high for certain applications

Generated Noise (GN)

@ 5 sq.ft. face area

Length (in.)	Face Velocity (ft. per min)	Octave Band - Hz/Generated Noise (dB re 10^{-12} watts)							
		63	125	250	500	1K	2K	4K	8K
All	- 2000	58	58	55	55	60	64	62	52
	- 1250	53	49	47	49	54	56	48	34
	+ 1250	56	49	44	45	53	56	50	37
	+ 2000	60	58	53	51	57	63	64	56

GN correction chart at right must be used to correct GN to other face areas. →

Face Area (sq.ft.)	2.5	5	10	20	40	80
dB	-3	0	+3	+6	+9	+12

Cross Section Sizes*

"A" dimension (in.)
13
25-26
50-53
75-80
100-107
125-134
150-161
175-188
200-215
225-240

"B" dimension
ANY SIZE

Approx. weight
4.0 lbs/cu.ft.

See Rectangular Silencer Cross-Section Dimensions to ensure selection matches ductwork dimensions.

CERTIFIED PERFORMANCE DATA

VIBRO-ACOUSTICS®
A Swegon Group company

RNM-HV-F4

Rectangular No-Media
High velocity silencer
(<2000 fpm)

How to Specify Example:

47 X **22** **RNM-HV-F4** X **60**

Duct Width | Duct Height | Silencer Model | Silencer Length

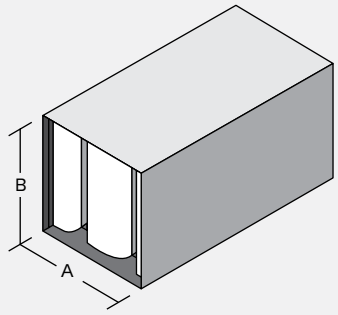

Insertion Loss (IL)

+ : "forward flow" where noise & airflow move in same direction (e.g. supply side)

- : "reverse flow" where noise & airflow move in opposite directions (e.g. return side)

See Silencer Selection Instructions. DIL above 50dB may be limited due to noise flanking around the silencer or along the duct walls. If more than 50dB DIL is required, contact your local Vibro-Acoustics Representative or call **1-800-565-8401**.

Length (in.)	Face Velocity (ft. per min)	Octave Band - Hz/Dynamic Insertion Loss (dB)							
		63	125	250	500	1000	2000	4000	8000
36	- 2000	6	5	10	14	9	8	6	5
	0	3	3	7	13	8	7	6	6
	+ 2000	3	4	8	14	9	8	7	5
60	- 2000	7	7	13	17	11	9	6	5
	0	3	5	8	14	9	9	7	7
	+ 2000	4	6	11	17	11	10	8	6
84	- 2000	9	10	14	18	12	10	8	7
	0	5	6	8	15	9	9	9	7
	+ 2000	6	7	12	18	12	11	9	8
108	- 2000	11	11	16	20	12	10	8	6
	0	9	6	10	16	9	10	8	7
	+ 2000	9	8	14	19	12	11	10	8

Pressure Drop (PD)

Pressure drops are reported in accordance with ASTM E477 methods and are based upon **ideal** flow conditions (5 diameters of straight duct on silencer inlet and 10 on outlet). Less than ideal conditions will result in an increase in pressure drop due to System Effects. See Silencer System Effects Data.

Length (in.)	Face Velocity (ft. per min) / Pressure Drop (in.w.g.)						
	500	1000	1500	1750	2000	2250	2500
36	0.02	0.07	0.15	0.20	0.26	0.33	0.41
60	0.02	0.07	0.16	0.21	0.28	0.35	0.44
84	0.02	0.08	0.18	0.25	0.32	0.41	0.50
108	0.02	0.08	0.17	0.23	0.30	0.38	0.47

☐ Acceptable (0 - 0.35") ☐ Caution (>0.35") Pressure Drop may be too high for certain applications

Generated Noise (GN)

@ 5 sq.ft. face area

Length (in.)	Face Velocity (ft. per min)	Octave Band - Hz/Generated Noise (dB re 10^{-12} watts)							
		63	125	250	500	1K	2K	4K	8K
All	- 2000	59	58	55	55	60	63	62	52
	- 1250	54	49	47	50	54	55	47	34
	+ 1250	56	49	44	46	53	55	50	37
	+ 2000	60	58	53	52	57	63	63	55

GN correction chart at right must be used to correct GN to other face areas. →

Face Area (sq.ft.)	2.5	5	10	20	40	80
dB	-3	0	+3	+6	+9	+12

Cross Section Sizes*

"A" dimension (in.)
12
23-24
46-49
69-74
92-99
115-124
138-149
161-174
184-199
207-224
230-240

"B" dimension
ANY SIZE

Approx. weight
4.2 lbs/cu.ft.

See Rectangular Silencer Cross-Section Dimensions to ensure selection matches ductwork dimensions.

CERTIFIED PERFORMANCE DATA

VIBRO-ACOUSTICS®
A Swegon Group company

RNM-HV-F5

Rectangular No-Media
High velocity silencer
(<2000 fpm)

How to Specify Example:

44 X **22** **RNM-HV-F5** X **60**

Duct Width | Duct Height | Silencer Model | Silencer Length

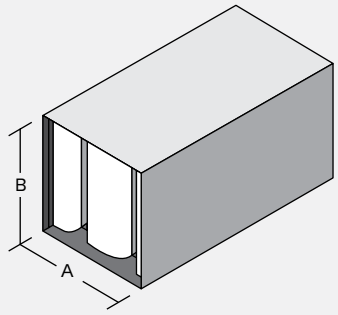

Insertion Loss (IL)

+ : "forward flow" where noise & airflow move in same direction (e.g. supply side)

- : "reverse flow" where noise & airflow move in opposite directions (e.g. return side)

See Silencer Selection Instructions. DIL above 50dB may be limited due to noise flanking around the silencer or along the duct walls. If more than 50dB DIL is required, contact your local Vibro-Acoustics Representative or call **1-800-565-8401**.

Length (in.)	Face Velocity (ft. per min)	Octave Band - Hz/Dynamic Insertion Loss (dB)							
		63	125	250	500	1000	2000	4000	8000
36	- 2000	6	5	10	14	11	8	6	5
	0	3	3	6	12	9	8	6	6
	+ 2000	3	4	8	13	10	9	7	5
60	- 2000	7	7	12	16	12	9	6	5
	0	3	5	8	14	10	9	7	7
	+ 2000	4	6	10	16	12	10	8	6
84	- 2000	9	9	13	18	13	11	9	7
	0	5	6	8	14	11	10	9	7
	+ 2000	6	7	11	18	13	12	10	8
108	- 2000	10	10	15	19	14	12	8	6
	0	9	6	9	15	11	11	9	7
	+ 2000	9	7	13	18	14	13	10	8

Pressure Drop (PD)

Pressure drops are reported in accordance with ASTM E477 methods and are based upon **ideal** flow conditions (5 diameters of straight duct on silencer inlet and 10 on outlet). Less than ideal conditions will result in an increase in pressure drop due to System Effects. See Silencer System Effects Data.

Length (in.)	Face Velocity (ft. per min) / Pressure Drop (in.w.g.)						
	500	1000	1500	1750	2000	2250	2500
36	0.02	0.07	0.15	0.20	0.26	0.33	0.41
60	0.02	0.07	0.16	0.21	0.28	0.35	0.44
84	0.02	0.08	0.17	0.23	0.31	0.39	0.48
108	0.02	0.07	0.17	0.23	0.30	0.38	0.46

☐ Acceptable (0 - 0.35") ☐ Caution (>0.35") Pressure Drop may be too high for certain applications

Generated Noise (GN)

@ 5 sq.ft. face area

Length (in.)	Face Velocity (ft. per min)	Octave Band - Hz/Generated Noise (dB re 10^{-12} watts)							
		63	125	250	500	1K	2K	4K	8K
All	- 2000	58	58	55	55	60	63	62	52
	- 1250	54	49	47	50	54	55	48	34
	+ 1250	56	50	44	47	53	55	50	37
	+ 2000	60	58	53	52	58	63	64	56

GN correction chart at right must be used to correct GN to other face areas. →

Face Area (sq.ft.)	2.5	5	10	20	40	80
dB	-3	0	+3	+6	+9	+12

Cross Section Sizes*

"A" dimension (in.)
11
21-22
42-45
63-68
84-91
105-114
126-137
147-160
168-183
189-206
210-229
231-240

"B" dimension
ANY SIZE

Approx. weight
4.4 lbs/cu.ft.

See Rectangular Silencer Cross-Section Dimensions to ensure selection matches ductwork dimensions.

CERTIFIED PERFORMANCE DATA

VIBRO-ACOUSTICS®
A Swegon Group company

RNM-HV-F6

Rectangular No-Media
High velocity silencer
(<2000 fpm)

How to Specify Example:

40 X **21** **RNM-HV-F6** X **60**

Duct Width | Duct Height | Silencer Model | Silencer Length

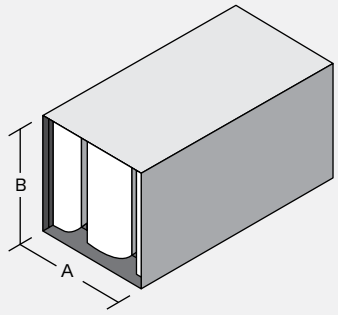

Insertion Loss (IL)

+ : "forward flow" where noise & airflow move in same direction (e.g. supply side)

- : "reverse flow" where noise & airflow move in opposite directions (e.g. return side)

See Silencer Selection Instructions. DIL above 50dB may be limited due to noise flanking around the silencer or along the duct walls. If more than 50dB DIL is required, contact your local Vibro-Acoustics Representative or call **1-800-565-8401**.

Length (in.)	Face Velocity (ft. per min)	Octave Band - Hz/Dynamic Insertion Loss (dB)							
		63	125	250	500	1000	2000	4000	8000
36	- 2000	5	5	9	14	12	9	6	5
	0	3	3	6	12	10	8	6	6
	+ 2000	3	3	8	13	12	9	7	5
60	- 2000	7	7	11	16	14	10	7	6
	0	2	4	7	13	12	9	7	7
	+ 2000	3	6	10	16	14	11	8	7
84	- 2000	9	9	12	17	14	12	9	7
	0	5	5	7	14	13	11	9	8
	+ 2000	6	6	10	17	14	13	10	8
108	- 2000	10	9	15	19	16	13	9	6
	0	8	5	9	15	13	12	9	8
	+ 2000	8	7	12	17	16	14	10	8

Pressure Drop (PD)

Pressure drops are reported in accordance with ASTM E477 methods and are based upon **ideal** flow conditions (5 diameters of straight duct on silencer inlet and 10 on outlet). Less than ideal conditions will result in an increase in pressure drop due to System Effects. See Silencer System Effects Data.

Length (in.)	Face Velocity (ft. per min) / Pressure Drop (in.w.g.)						
	500	1000	1500	1750	2000	2250	2500
36	0.02	0.07	0.15	0.20	0.27	0.33	0.42
60	0.02	0.07	0.16	0.21	0.28	0.35	0.44
84	0.02	0.07	0.17	0.22	0.29	0.37	0.46
108	0.02	0.07	0.17	0.22	0.24	0.37	0.46

☐ Acceptable (0 - 0.35") ☐ Caution (>0.35") Pressure Drop may be too high for certain applications

Generated Noise (GN)

@ 5 sq.ft. face area

Length (in.)	Face Velocity (ft. per min)	Octave Band - Hz/Generated Noise (dB re 10^{-12} watts)							
		63	125	250	500	1K	2K	4K	8K
All	- 2000	58	58	55	56	61	64	63	53
	- 1250	55	49	47	50	55	56	49	35
	+ 1250	56	50	44	47	53	56	51	38
	+ 2000	60	58	53	53	58	63	64	56

GN correction chart at right must be used to correct GN to other face areas. →

Face Area (sq.ft.)	2.5	5	10	20	40	80
dB	-3	0	+3	+6	+9	+12

Cross Section Sizes*

"A" dimension (in.)
10
19-20
38-41
57-62
76-83
95-104
114-125
133-146
152-167
171-188
190-240

"B" dimension
ANY SIZE

Approx. weight
4.5 lbs/cu.ft.

See Rectangular Silencer Cross-Section Dimensions to ensure selection matches ductwork dimensions.

CERTIFIED PERFORMANCE DATA

VIBRO-ACOUSTICS®
A Swegon Group company

RNM-HV-F7

Rectangular No-Media
High velocity silencer
(<2000 fpm)

How to Specify Example:

37 X **21** **RNM-HV-F7** X **60**

Duct Width	Duct Height	Silencer Model	Silencer Length

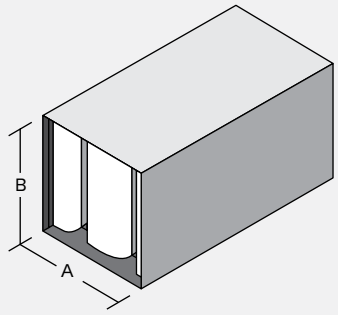

Insertion Loss (IL)

+ : "forward flow" where noise & airflow move in same direction (e.g. supply side)

- : "reverse flow" where noise & airflow move in opposite directions (e.g. return side)

See Silencer Selection Instructions. DIL above 50dB may be limited due to noise flanking around the silencer or along the duct walls. If more than 50dB DIL is required, contact your local Vibro-Acoustics Representative or call **1-800-565-8401**.

Length (in.)	Face Velocity (ft. per min)	Octave Band - Hz/Dynamic Insertion Loss (dB)							
		63	125	250	500	1000	2000	4000	8000
36	- 2000	5	5	9	14	14	9	6	5
	0	3	3	6	12	12	8	6	6
	+ 2000	3	3	7	13	13	9	7	5
60	- 2000	6	6	11	15	15	10	7	6
	0	1	4	7	13	14	10	8	7
	+ 2000	3	6	9	15	15	11	8	7
84	- 2000	9	8	12	16	16	13	9	8
	0	5	5	7	13	14	12	9	8
	+ 2000	6	6	10	16	16	14	10	9
108	- 2000	10	9	14	18	18	14	9	7
	0	8	5	8	14	15	14	10	8
	+ 2000	8	6	11	17	17	15	11	9

Pressure Drop (PD)

Pressure drops are reported in accordance with ASTM E477 methods and are based upon **ideal** flow conditions (5 diameters of straight duct on silencer inlet and 10 on outlet). Less than ideal conditions will result in an increase in pressure drop due to System Effects. See Silencer System Effects Data.

Length (in.)	Face Velocity (ft. per min) / Pressure Drop (in.w.g.)						
	500	1000	1500	1750	2000	2250	2500
36	0.02	0.07	0.15	0.21	0.27	0.34	0.42
60	0.02	0.07	0.16	0.21	0.28	0.35	0.44
84	0.02	0.07	0.16	0.21	0.28	0.35	0.44
108	0.02	0.07	0.16	0.22	0.29	0.37	0.45

☐ Acceptable (0 - 0.35") ☐ Caution (>0.35") Pressure Drop may be too high for certain applications

Cross Section Sizes*

"A" dimension (in.)
9
17-18
33-37
50-56
66-75
83-94
99-113
116-240

"B" dimension
ANY SIZE

Approx. weight
4.7 lbs/cu.ft.

See Rectangular Silencer Cross-Section Dimensions to ensure selection matches ductwork dimensions.

Generated Noise (GN)

@ 5 sq.ft. face area

Length (in.)	Face Velocity (ft. per min)	Octave Band - Hz/Generated Noise (dB re 10^{-12} watts)							
		63	125	250	500	1K	2K	4K	8K
All	- 2000	58	58	55	56	61	64	63	54
	- 1250	55	49	47	51	56	57	60	35
	+ 1250	57	50	44	48	54	56	51	38
	+ 2000	61	58	53	53	58	63	64	56

GN correction chart at right must be used to correct GN to other face areas. →

Face Area (sq.ft.)	2.5	5	10	20	40	80
dB	-3	0	+3	+6	+9	+12

RNM-HV-F8

Rectangular No-Media
High velocity silencer
(<2000 fpm)

How to Specify Example:

14 X **22** **RNM-HV-F8** X **60**

Duct Width	Duct Height	Silencer Model	Silencer Length

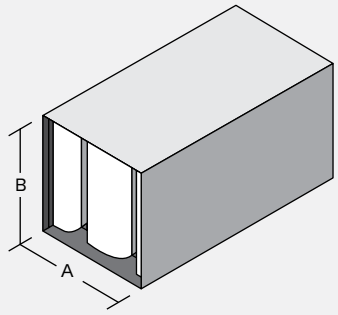

Insertion Loss (IL)

+ : "forward flow" where noise & airflow move in same direction (e.g. supply side)

- : "reverse flow" where noise & airflow move in opposite directions (e.g. return side)

See Silencer Selection Instructions. DIL above 50dB may be limited due to noise flanking around the silencer or along the duct walls. If more than 50dB DIL is required, contact your local Vibro-Acoustics Representative or call **1-800-565-8401**.

Length (in.)	Face Velocity (ft. per min)	Octave Band - Hz/Dynamic Insertion Loss (dB)							
		63	125	250	500	1000	2000	4000	8000
36	- 2000	5	5	12	20	19	9	9	8
	0	4	2	7	17	11	7	8	7
	+ 2000	2	3	10	17	19	9	8	6
60	- 2000	7	7	13	21	21	11	11	10
	0	2	4	7	17	14	9	10	9
	+ 2000	1	5	10	19	21	10	10	8
84	- 2000	8	7	13	22	25	13	12	11
	0	3	4	7	18	17	11	10	9
	+ 2000	3	5	11	19	24	12	11	9
108	- 2000	9	7	14	22	28	15	13	11
	0	5	4	7	18	21	13	11	9
	+ 2000	6	5	11	20	28	14	12	9

Pressure Drop (PD)

Pressure drops are reported in accordance with ASTM E477 methods and are based upon **ideal** flow conditions (5 diameters of straight duct on silencer inlet and 10 on outlet). Less than ideal conditions will result in an increase in pressure drop due to System Effects. See Silencer System Effects Data.

Length (in.)	Face Velocity (ft. per min) / Pressure Drop (in.w.g.)						
	500	1000	1500	1750	2000	2250	2500
36	0.02	0.07	0.16	0.21	0.28	0.35	0.44
60	0.02	0.07	0.16	0.21	0.28	0.35	0.44
84	0.02	0.07	0.15	0.21	0.27	0.34	0.42
108	0.02	0.07	0.15	0.20	0.26	0.33	0.41

☐ Acceptable (0 - 0.35") ☐ Caution (>0.35") Pressure Drop may be too high for certain applications

Generated Noise (GN)

@ 5 sq.ft. face area

Length (in.)	Face Velocity (ft. per min)	Octave Band - Hz/Generated Noise (dB re 10^{-12} watts)							
		63	125	250	500	1K	2K	4K	8K
All	- 2000	58	59	55	55	59	66	66	56
	- 1250	56	49	46	49	56	60	53	37
	+ 1250	55	48	42	44	53	57	51	37
	+ 2000	60	57	53	51	57	65	64	56

GN correction chart at right must be used to correct GN to other face areas. →

Face Area (sq.ft.)	2.5	5	10	20	40	80
dB	-3	0	+3	+6	+9	+12

Cross Section Sizes*

"A" dimension (in.)
9
17-18
33-37
50-56
66-75
83-94
99-113
116-240

"B" dimension
ANY SIZE

Approx. weight
5.3 lbs/cu.ft.

See Rectangular Silencer Cross-Section Dimensions to ensure selection matches ductwork dimensions.

CERTIFIED PERFORMANCE DATA

VIBRO-ACOUSTICS®
A Swegon Group company

RNM-HV-F9

Rectangular No-Media
High velocity silencer
(<2000 fpm)

How to Specify Example:

21 X **21** **RNM-HV-F9** X **60**

Duct Width	Duct Height	Silencer Model	Silencer Length

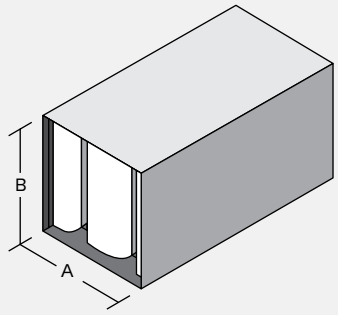

Insertion Loss (IL)

+ : "forward flow" where noise & airflow move in same direction (e.g. supply side)

- : "reverse flow" where noise & airflow move in opposite directions (e.g. return side)

See Silencer Selection Instructions. DIL above 50dB may be limited due to noise flanking around the silencer or along the duct walls. If more than 50dB DIL is required, contact your local Vibro-Acoustics Representative or call **1-800-565-8401**.

Length (in.)	Face Velocity (ft. per min)	Octave Band - Hz/Dynamic Insertion Loss (dB)							
		63	125	250	500	1000	2000	4000	8000
36	- 2000	4	4	8	13	19	10	7	5
	0	3	2	5	10	16	9	7	6
	+ 2000	2	3	7	11	18	10	7	6
60	- 2000	6	6	9	14	20	12	8	7
	0	0	4	5	11	19	11	8	8
	+ 2000	1	5	7	13	20	12	9	8
84	- 2000	9	7	10	14	20	15	10	8
	0	6	4	5	11	20	14	10	9
	+ 2000	7	5	8	13	20	16	11	9
108	- 2000	9	7	11	16	23	17	11	8
	0	7	4	6	12	22	17	11	10
	+ 2000	8	5	9	15	22	19	12	10

Pressure Drop (PD)

Pressure drops are reported in accordance with ASTM E477 methods and are based upon **ideal** flow conditions (5 diameters of straight duct on silencer inlet and 10 on outlet). Less than ideal conditions will result in an increase in pressure drop due to System Effects. See Silencer System Effects Data.

Length (in.)	Face Velocity (ft. per min) / Pressure Drop (in.w.g.)						
	500	1000	1500	1750	2000	2250	2500
36	0.02	0.07	0.16	0.21	0.28	0.35	0.44
60	0.02	0.07	0.16	0.21	0.28	0.35	0.44
84	0.02	0.06	0.14	0.18	0.24	0.30	0.38
108	0.02	0.07	0.16	0.21	0.28	0.35	0.44

☐ Acceptable (0 - 0.35") ☐ Caution (>0.35") Pressure Drop may be too high for certain applications

Generated Noise (GN)

@ 5 sq.ft. face area

Length (in.)	Face Velocity (ft. per min)	Octave Band - Hz/Generated Noise (dB re 10^{-12} watts)							
		63	125	250	500	1K	2K	4K	8K
All	- 2000	58	57	56	57	62	65	65	56
	- 1250	55	50	47	52	58	58	52	36
	+ 1250	58	50	45	49	54	57	52	39
	+ 2000	62	58	54	54	58	64	65	58

GN correction chart at right must be used to correct GN to other face areas. →

Face Area (sq.ft.)	2.5	5	10	20	40	80
dB	-3	0	+3	+6	+9	+12

Cross Section Sizes*

"A" dimension (in.)
6
10-13
20-26
30-240

"B" dimension
ANY SIZE

Approx. weight
6.0 lbs/cu.ft.

See Rectangular Silencer Cross-Section Dimensions to ensure selection matches ductwork dimensions.

CNM

Circular No-Media
Straight Silencers

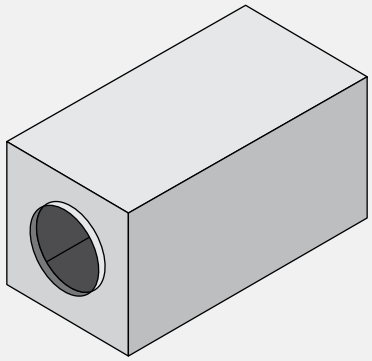

Description

VIBRO-ACOUSTICS' CNM SILENCERS do not contain glass fiber and are void of any fill material whatsoever. The Helmholtz resonator principle is used as the primary sound-reducing mechanism.

Model Names

Vibro-Acoustics' silencer model names are coded to help identify their recommended application range.

*The lower the Frequency Indicator, the better the silencer's insertion loss in the low frequency range. The higher the Frequency Indicator, the better the silencer's insertion loss in the mid to high frequency ranges.

Circular CNM - ____ - ____

Silencer Type

Velocity Range
LV, MV, HV, UHV

Frequency Indicator*
F1, F2

Applications

> Wherever glass fiber is not acceptable in duct and air handling systems

> When it is necessary to periodically sterilize the entire interior of the silencer

> In laboratory fume hood systems, pharmaceutical manufacturing facilities, food processing plants, hospitals clean rooms, kitchen exhausts, etc.

> In supply, return or exhaust ductwork

> On the receiver side of valves, dampers, terminal boxes, etc.

> Normal recommended duct velocity range

CNM-LV	0-750 fpm	CNM-HV	1250-2000 fpm
CNM-MV	750-1250 fpm	CNM-UHV	2000-3500 fpm

Features and Benefits

> No glass fiber particles to contaminate the airstream

> No glass fiber to host contamination within the silencer

> Ability to sterilize the silencer

> CNM: available in any diameter from 8”-16”; larger diameters also available – **contact our Application Engineers**

> Can be selected to suit the acoustic, space, or energy-cost requirements

> Construction quality and aerodynamic design optimized to give reliable performance, best acoustics, lowest pressure drop and lowest overall cost

> When break-out noise is of prime concern CNM silencers may be appropriate selections. They may require mass/stiffness added to their outer casing Refer to Silencer Selection Instructions for proper silencer location.

Cautions/When Not to Use CNM Silencers

> When 3-5 equivalent duct diameters of straight, unobstructed duct are not available on both the silencer’s inlet or discharge; consider using Circular Elbow No-Media Silencers, Elbow Silencers, Transitional Silencers or Fan Silencers

> The acoustic performance of CNM silencers is generally less than CD silencers. Longer lengths may be required to achieve the insertion loss required.

Performance Data/Testing

See Performance Data section.
Vibro-Acoustics’ 5th generation aero-acoustic laboratory was the first laboratory to be NVLAP accredited (Lab Code 100424-0) for the ASTM E-477 silencer test code. NVLAP is administered by the U.S. Dept. of Commerce.

Silencer Selection and Location

Vibro-Acoustics offers multiple selection methods, from our complete analysis service to Do-It-Yourself quick selections. Refer to Silencer Selection Instructions for details.

Standard Construction Features

> Galvanized, lockformed casing constructed to SMACNA standards

> 1” slip connection at each end

> Aerodynamically shaped, galvanized nose at inlet

> Special “tuned” perforated galvanized splitters complete with perforated diffuser tail section

> Splitters configured with internal “tuned” chambers

> No acoustic media

Special Construction Options

> Heavier gauge casings and perforated metal

> Continuously welded casings

> Special materials (e.g. stainless steel, aluminum)

> Flanges

> Access doors

> High transmission loss (HTL) casings to prevent break-out/break-in noise

> Built in transitions

> Removable splitters

> Internal spray sterilization systems can be built into silencers

> Drains to remove toxic or contaminated solutions

> Airflow measuring devices

> For details of above and more special options see Special Construction Options.

CERTIFIED PERFORMANCE DATA

VIBRO-ACOUSTICS®
A Swegon Group company

8 CNM-LV-F1

Circular No-Media
Low velocity silencer
(<750 fpm)

How to Specify Example:

8 X **CNM-LV-F1** X **72**

- 8 — Duct Connection Size
- CNM-LV-F1 — Silencer Model
- 72 — Silencer Length

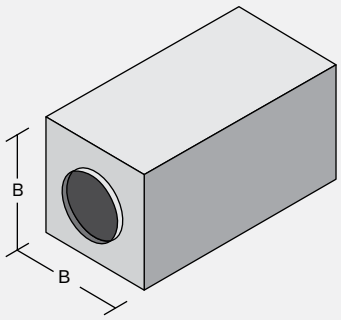

Insertion Loss (IL)

+ : "forward flow" where noise & airflow move in same direction (e.g. supply side)

- : "reverse flow" where noise & airflow move in opposite directions (e.g. return side)

See Silencer Selection Instructions. DIL above 50dB may be limited due to noise flanking around the silencer or along the duct walls. If more than 50dB DIL is required, contact your local Vibro-Acoustics Representative or call **1-800-565-8401**.

Length (in.)	Face Velocity (ft. per min)	Octave Band - Hz/Dynamic Insertion Loss (dB)							
		63	125	250	500	1000	2000	4000	8000
36	- 500	9	18	36	13	13	18	17	14
	0	11	15	34	8	10	18	18	15
	+ 500	11	18	37	12	13	20	19	15
48	- 500	10	18	36	15	14	22	21	16
	0	13	15	33	10	11	22	22	17
	+ 500	12	19	38	14	15	24	24	17
60	- 500	11	19	37	18	16	26	26	19
	0	13	14	33	12	11	26	27	19
	+ 500	13	20	39	17	16	28	29	20
72	- 500	12	20	38	20	18	30	31	22
	0	13	14	32	14	12	30	31	21
	+ 500	15	21	40	19	18	32	34	22

Pressure Drop (PD)

Pressure drops are reported in accordance with ASTM E477 methods and are based upon **ideal** flow conditions (5 diameters of straight duct on silencer inlet and 10 on outlet). Less than ideal conditions will result in an increase in pressure drop due to System Effects. See Silencer System Effects Data.

Duct Connect. Size (in.)	B x B (in.)	Silencer Length (in.)	Weight (lbs)	Face Velocity (ft. per min) / Pressure Drop (in.w.g.)						
				250	500	750	1000	1250	1500	1750
8	**30x30**	36	107	0.03	0.11	0.25	0.44	0.69	0.99	1.35
		48	139	0.03	0.13	0.29	0.52	0.81	1.16	1.59
		60	60	0.04	0.15	0.33	0.59	0.93	1.34	1.82
		72	108	0.04	0.17	0.38	0.67	1.05	1.51	2.05

☐ Acceptable (0 - 0.35") ☐ Caution (>0.35") Pressure Drop may be too high for certain applications

Generated Noise (GN)

@ 0.35 sq.ft. face area

Length (in.)	Face Velocity (ft. per min)	Octave Band - Hz/Generated Noise (dB re 10^{-12} watts)							
		63	125	250	500	1000	2000	4000	8000
All	- 750	55	46	46	42	45	47	44	30
	- 500	54	43	43	38	43	44	38	21
	+ 500	50	43	38	36	42	44	35	20
	+ 750	53	48	44	40	44	47	41	26

CERTIFIED PERFORMANCE DATA

VIBRO-ACOUSTICS®
A Swegon Group company

8 CNM-LV-F2

Circular No-Media
Low velocity silencer
(<750 fpm)

How to Specify Example:

8 X **CNM-LV-F2** X **72**

- 8 — Duct Connection Size
- CNM-LV-F2 — Silencer Model
- 72 — Silencer Length

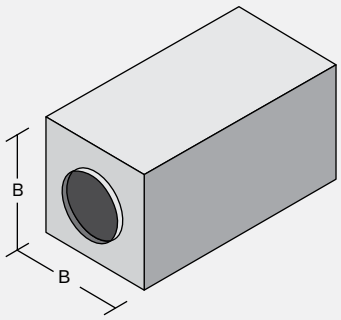

Insertion Loss (IL)

+ : "forward flow" where noise & airflow move in same direction (e.g. supply side)

- : "reverse flow" where noise & airflow move in opposite directions (e.g. return side)

See Silencer Selection Instructions. DIL above 50dB may be limited due to noise flanking around the silencer or along the duct walls. If more than 50dB DIL is required, contact your local Vibro-Acoustics Representative or call **1-800-565-8401**.

Length (in.)	Face Velocity (ft. per min)	Octave Band - Hz/Dynamic Insertion Loss (dB)							
		63	125	250	500	1000	2000	4000	8000
36	- 500	9	14	22	23	16	20	16	15
	0	9	12	20	18	13	20	17	17
	+ 500	10	15	25	24	18	23	19	17
48	- 500	9	14	23	26	20	24	21	17
	0	9	12	21	22	16	24	22	19
	+ 500	10	16	26	27	22	26	24	19
60	- 500	9	15	24	30	23	28	27	20
	0	10	12	21	26	20	28	28	20
	+ 500	11	16	27	30	25	30	29	21
72	- 500	10	16	26	33	27	32	32	23
	0	10	12	22	30	23	32	33	22
	+ 500	11	17	28	34	29	34	35	23

Pressure Drop (PD)

Pressure drops are reported in accordance with ASTM E477 methods and are based upon **ideal** flow conditions (5 diameters of straight duct on silencer inlet and 10 on outlet). Less than ideal conditions will result in an increase in pressure drop due to System Effects. See Silencer System Effects Data.

Duct Connect. Size (in.)	B x B (in.)	Silencer Length (in.)	Weight (lbs)	Face Velocity (ft. per min) / Pressure Drop (in.w.g.)						
				250	500	750	1000	1250	1500	1750
8	**20x20**	36	69	0.03	0.11	0.24	0.43	0.67	0.97	1.32
		48	90	0.03	0.13	0.30	0.53	0.82	1.19	1.61
		60	113	0.04	0.16	0.35	0.62	0.97	1.40	1.91
		72	135	0.05	0.18	0.41	0.72	1.13	1.62	2.21

☐ Acceptable (0 - 0.35") ☐ Caution (>0.35") Pressure Drop may be too high for certain applications

Generated Noise (GN)

@ 0.35 sq.ft. face area

Length (in.)	Face Velocity (ft. per min)	Octave Band - Hz/Generated Noise (dB re 10^{-12} watts)							
		63	125	250	500	1000	2000	4000	8000
All	- 750	55	46	46	44	46	50	49	34
	- 500	55	43	43	44	44	48	45	26
	+ 500	49	41	36	34	42	47	38	24
	+ 750	51	45	41	38	44	49	43	31

CERTIFIED PERFORMANCE DATA

VIBRO-ACOUSTICS®
A Swegon Group company

10 CNM-LV-F1

Circular No-Media
Low velocity silencer
(<750 fpm)

How to Specify Example:

10 X **CNM-LV-F1** X **72**

- **10** — Duct Connection Size
- **CNM-LV-F1** — Silencer Model
- **72** — Silencer Length

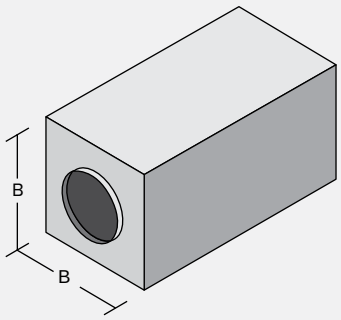

Insertion Loss (IL)

+ : "forward flow" where noise & airflow move in same direction (e.g. supply side)

- : "reverse flow" where noise & airflow move in opposite directions (e.g. return side)

See Silencer Selection Instructions. DIL above 50dB may be limited due to noise flanking around the silencer or along the duct walls. If more than 50dB DIL is required, contact your local Vibro-Acoustics Representative or call **1-800-565-8401**.

Length (in.)	Face Velocity (ft. per min)	Octave Band - Hz/Dynamic Insertion Loss (dB)							
		63	125	250	500	1000	2000	4000	8000
36	- 500	12	16	31	14	13	17	16	15
	0	12	13	28	9	10	17	18	17
	+ 500	13	16	32	13	14	19	19	17
48	- 500	13	18	35	17	15	20	18	15
	0	12	13	30	12	12	21	22	19
	+ 500	14	17	35	17	16	24	24	19
60	- 500	14	19	37	21	20	27	25	19
	0	12	14	31	15	14	26	27	22
	+ 500	15	18	37	20	19	29	28	22
72	- 500	15	20	40	25	23	32	30	22
	0	13	14	33	18	16	31	31	24
	+ 500	16	20	40	24	22	33	33	25

Pressure Drop (PD)

Pressure drops are reported in accordance with ASTM E477 methods and are based upon **ideal** flow conditions (5 diameters of straight duct on silencer inlet and 10 on outlet). Less than ideal conditions will result in an increase in pressure drop due to System Effects. See Silencer System Effects Data.

Duct Connect. Size (in.)	B x B (in.)	Silencer Length (in.)	Weight (lbs)	Face Velocity (ft. per min) / Pressure Drop (in.w.g.)						
				250	500	750	1000	1250	1500	1750
10	**30x30**	36	111	0.03	0.13	0.29	0.51	0.80	1.15	1.56
		48	144	0.04	0.15	0.34	0.60	0.94	1.36	1.85
		60	180	0.04	0.17	0.39	0.70	1.09	1.57	2.13
		72	213	0.05	0.20	0.44	0.79	1.23	1.78	2.42

☐ Acceptable (0 - 0.35") ☐ Caution (>0.35") Pressure Drop may be too high for certain applications

Generated Noise (GN)

@ 0.55 sq.ft. face area

Length (in.)	Face Velocity (ft. per min)	Octave Band - Hz/Generated Noise (dB re 10^{-12} watts)							
		63	125	250	500	1000	2000	4000	8000
All	- 750	55	49	47	43	45	50	50	38
	- 500	54	46	44	40	43	48	45	30
	+ 500	51	48	41	37	43	47	41	24
	+ 750	54	52	46	41	45	50	46	32

CERTIFIED PERFORMANCE DATA

VIBRO-ACOUSTICS®
A Swegon Group company

10 CNM-LV-F2

Circular No-Media
Low velocity silencer
(<750 fpm)

How to Specify Example:

10 X **CNM-LV-F2** X **72**

- **10** — Duct Connection Size
- **CNM-LV-F2** — Silencer Model
- **72** — Silencer Length

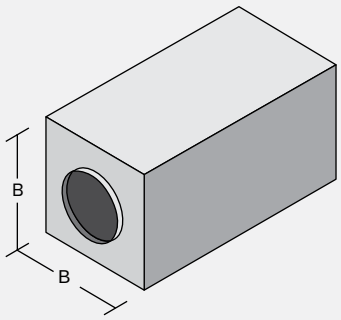

Insertion Loss (IL)

+ : "forward flow" where noise & airflow move in same direction (e.g. supply side)

- : "reverse flow" where noise & airflow move in opposite directions (e.g. return side)

See Silencer Selection Instructions. DIL above 50dB may be limited due to noise flanking around the silencer or along the duct walls. If more than 50dB DIL is required, contact your local Vibro-Acoustics Representative or call **1-800-565-8401**.

Length (in.)	Face Velocity (ft. per min)	Octave Band - Hz/Dynamic Insertion Loss (dB)							
		63	125	250	500	1000	2000	4000	8000
36	- 500	10	11	17	22	16	18	15	14
	0	8	9	15	19	12	17	16	16
	+ 500	11	12	19	23	17	19	17	17
48	- 500	11	12	19	26	20	22	19	17
	0	9	10	16	23	16	21	20	18
	+ 500	12	13	21	27	22	23	22	19
60	- 500	12	14	21	30	25	26	24	20
	0	10	11	17	27	21	25	25	20
	+ 500	13	14	22	30	26	28	26	21
72	- 500	13	15	22	34	29	30	28	22
	0	10	11	18	32	25	29	29	22
	+ 500	14	16	24	34	30	32	31	23

Pressure Drop (PD)

Pressure drops are reported in accordance with ASTM E477 methods and are based upon **ideal** flow conditions (5 diameters of straight duct on silencer inlet and 10 on outlet). Less than ideal conditions will result in an increase in pressure drop due to System Effects. See Silencer System Effects Data.

Duct Connect. Size (in.)	B x B (in.)	Silencer Length (in.)	Weight (lbs)	Face Velocity (ft. per min) / Pressure Drop (in.w.g.)						
				250	500	750	1000	1250	1500	1750
10	**20x20**	36	74	0.03	0.12	0.26	0.47	0.73	1.05	1.42
		48	97	0.03	0.14	0.31	0.55	0.86	1.24	1.68
		60	121	0.04	0.16	0.36	0.64	0.99	1.43	1.94
		72	143	0.05	0.18	0.41	0.72	1.13	1.62	2.21

☐ Acceptable (0 - 0.35") ☐ Caution (>0.35") Pressure Drop may be too high for certain applications

Generated Noise (GN)

@ 0.55 sq.ft. face area

Length (in.)	Face Velocity (ft. per min)	Octave Band - Hz/Generated Noise (dB re 10^{-12} watts)							
		63	125	250	500	1000	2000	4000	8000
All	- 750	54	50	47	45	48	52	54	42
	- 500	53	47	45	42	46	51	51	36
	+ 500	52	46	40	35	44	48	41	26
	+ 750	54	50	45	39	43	50	46	33

CERTIFIED PERFORMANCE DATA

VIBRO-ACOUSTICS®
A Swegon Group company

12 CNM-LV-F1

Circular No-Media
Low velocity silencer
(<750 fpm)

How to Specify Example:

12 X **CNM-LV-F1** X **72**

- 12 — Duct Connection Size
- CNM-LV-F1 — Silencer Model
- 72 — Silencer Length

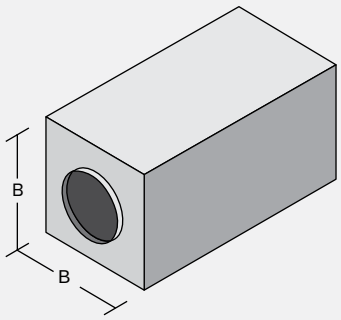

Insertion Loss (IL)

+ : "forward flow" where noise & airflow move in same direction (e.g. supply side)

- : "reverse flow" where noise & airflow move in opposite directions (e.g. return side)

See Silencer Selection Instructions. DIL above 50dB may be limited due to noise flanking around the silencer or along the duct walls. If more than 50dB DIL is required, contact your local Vibro-Acoustics Representative or call **1-800-565-8401**.

Length (in.)	Face Velocity (ft. per min)	Octave Band - Hz/Dynamic Insertion Loss (dB)							
		63	125	250	500	1000	2000	4000	8000
36	- 500	13	14	27	14	13	17	16	16
	0	10	11	22	10	11	16	17	18
	+ 500	12	13	26	14	14	18	18	19
48	- 500	16	18	33	18	16	18	15	14
	0	11	12	26	14	14	21	22	21
	+ 500	14	15	31	19	18	24	23	22
60	- 500	16	18	37	25	23	29	25	20
	0	12	13	30	18	16	26	27	24
	+ 500	16	17	36	24	22	29	28	25
72	- 500	18	20	42	31	28	35	29	22
	0	13	14	35	21	19	32	31	27
	+ 500	17	19	41	29	26	35	33	27

Pressure Drop (PD)

Pressure drops are reported in accordance with ASTM E477 methods and are based upon **ideal** flow conditions (5 diameters of straight duct on silencer inlet and 10 on outlet). Less than ideal conditions will result in an increase in pressure drop due to System Effects. See Silencer System Effects Data.

Duct Connect. Size (in.)	B x B (in.)	Silencer Length (in.)	Weight (lbs)	Face Velocity (ft. per min) / Pressure Drop (in.w.g.)						
				250	500	750	1000	1250	1500	1750
12	**30x30**	36	116	0.04	0.15	0.33	0.58	0.91	1.31	1.78
		48	151	0.04	0.17	0.39	0.69	1.08	1.55	2.11
		60	187	0.05	0.20	0.45	0.80	1.25	1.80	2.45
		72	222	0.06	0.23	0.51	0.91	1.42	2.05	2.79

☐ Acceptable (0 - 0.35") ☐ Caution (>0.35") Pressure Drop may be too high for certain applications

Generated Noise (GN)

@ 0.79 sq.ft. face area

Length (in.)	Face Velocity (ft. per min)	Octave Band - Hz/Generated Noise (dB re 10^{-12} watts)							
		63	125	250	500	1000	2000	4000	8000
All	- 750	54	52	49	45	46	53	55	45
	- 500	53	50	45	41	44	52	52	39
	+ 500	52	52	44	38	45	50	47	32
	+ 750	55	56	49	41	46	52	50	38

CERTIFIED PERFORMANCE DATA

VIBRO-ACOUSTICS®
A Swegon Group company

12 CNM-LV-F2

Circular No-Media
Low velocity silencer
(<750 fpm)

How to Specify Example:

12 X **CNM-LV-F2** X **72**

- **12** — Duct Connection Size
- **CNM-LV-F2** — Silencer Model
- **72** — Silencer Length

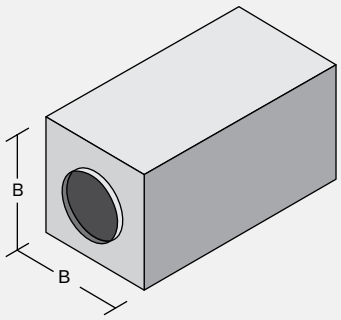

Insertion Loss (IL)

+ : "forward flow" where noise & airflow move in same direction (e.g. supply side)

- : "reverse flow" where noise & airflow move in opposite directions (e.g. return side)

See Silencer Selection Instructions. DIL above 50dB may be limited due to noise flanking around the silencer or along the duct walls. If more than 50dB DIL is required, contact your local Vibro-Acoustics Representative or call **1-800-565-8401**.

Length (in.)	Face Velocity (ft. per min)	Octave Band - Hz/Dynamic Insertion Loss (dB)							
		63	125	250	500	1000	2000	4000	8000
36	- 500	8	9	13	22	16	15	14	14
	0	6	6	10	20	11	14	15	16
	+ 500	8	8	13	22	16	16	16	17
48	- 500	10	11	15	26	21	19	18	17
	0	7	8	11	25	16	18	18	18
	+ 500	9	11	15	26	22	21	20	19
60	- 500	11	13	17	30	26	23	21	19
	0	8	9	12	26	22	22	22	20
	+ 500	11	13	17	31	27	25	23	22
72	- 500	13	14	19	34	31	28	24	22
	0	10	11	13	33	27	27	25	23
	+ 500	13	15	20	35	32	30	27	24

Pressure Drop (PD)

Pressure drops are reported in accordance with ASTM E477 methods and are based upon **ideal** flow conditions (5 diameters of straight duct on silencer inlet and 10 on outlet). Less than ideal conditions will result in an increase in pressure drop due to System Effects. See Silencer System Effects Data.

Duct Connect. Size (in.)	B x B (in.)	Silencer Length (in.)	Weight (lbs)	Face Velocity (ft. per min) / Pressure Drop (in.w.g.)						
				250	500	750	1000	1250	1500	1750
12	**20x20**	36	78	0.03	0.13	0.28	0.50	0.78	1.13	1.53
		48	103	0.04	0.14	0.32	0.57	0.90	1.29	1.76
		60	128	0.04	0.16	0.36	0.65	1.01	1.46	1.98
		72	153	0.05	0.18	0.41	0.72	1.13	1.62	2.21

☐ Acceptable (0 - 0.35") ☐ Caution (>0.35") Pressure Drop may be too high for certain applications

Generated Noise (GN)

@ 0.79 sq.ft. face area

Length (in.)	Face Velocity (ft. per min)	Octave Band - Hz/Generated Noise (dB re 10^{-12} watts)							
		63	125	250	500	1000	2000	4000	8000
All	- 750	53	54	49	46	49	55	59	51
	- 500	51	52	47	44	49	54	58	46
	+ 500	54	52	45	36	46	49	44	27
	+ 750	56	55	49	41	47	51	47	34

CERTIFIED PERFORMANCE DATA

VIBRO-ACOUSTICS®
A Swegon Group company

14 CNM-LV-F1

Circular No-Media
Low velocity silencer
(<750 fpm)

How to Specify Example:

14 X **CNM-LV-F1** X **72**

- **14** — Duct Connection Size
- **CNM-LV-F1** — Silencer Model
- **72** — Silencer Length

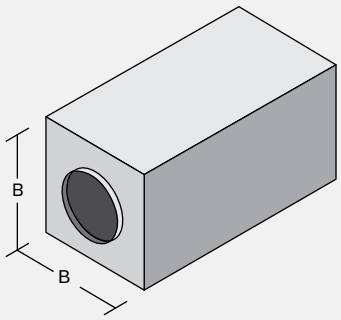

Insertion Loss (IL)

+ : "forward flow" where noise & airflow move in same direction (e.g. supply side)

- : "reverse flow" where noise & airflow move in opposite directions (e.g. return side)

See Silencer Selection Instructions. DIL above 50dB may be limited due to noise flanking around the silencer or along the duct walls. If more than 50dB DIL is required, contact your local Vibro-Acoustics Representative or call **1-800-565-8401**.

Length (in.)	Face Velocity (ft. per min)	Octave Band - Hz/Dynamic Insertion Loss (dB)							
		63	125	250	500	1000	2000	4000	8000
36	- 500	11	12	26	11	12	15	13	11
	0	9	10	22	9	12	15	14	14
	+ 500	10	11	25	11	13	17	15	14
48	- 500	13	14	31	15	17	19	16	13
	0	10	11	25	12	15	20	19	17
	+ 500	12	14	30	16	18	22	20	18
60	- 500	14	16	35	20	23	26	22	18
	0	11	12	28	15	19	26	24	21
	+ 500	14	16	35	21	23	28	25	21
72	- 500	16	18	40	25	28	32	26	21
	0	12	13	31	18	23	31	29	24
	+ 500	16	18	40	25	29	34	30	25

Pressure Drop (PD)

Pressure drops are reported in accordance with ASTM E477 methods and are based upon **ideal** flow conditions (5 diameters of straight duct on silencer inlet and 10 on outlet). Less than ideal conditions will result in an increase in pressure drop due to System Effects. See Silencer System Effects Data.

Duct Connect. Size (in.)	B x B (in.)	Silencer Length (in.)	Weight (lbs)	Face Velocity (ft. per min) / Pressure Drop (in.w.g.)						
				250	500	750	1000	1250	1500	1750
14	**36x36**	36	147	0.03	0.11	0.24	0.42	0.66	0.95	1.29
		48	192	0.03	0.13	0.29	0.51	0.79	1.14	1.56
		60	236	0.04	0.15	0.34	0.60	0.93	1.34	1.82
		72	282	0.04	0.17	0.38	0.68	1.07	1.54	2.09

☐ Acceptable (0 - 0.35") ☐ Caution (>0.35") Pressure Drop may be too high for certain applications

Generated Noise (GN)

@ 1.07 sq.ft. face area

Length (in.)	Face Velocity (ft. per min)	Octave Band - Hz/Generated Noise (dB re 10^{-12} watts)							
		63	125	250	500	1000	2000	4000	8000
All	- 750	54	48	42	41	44	48	44	39
	- 500	53	44	36	37	40	41	36	30
	+ 500	54	50	39	36	41	41	33	26
	+ 750	55	54	46	41	45	48	42	35

CERTIFIED PERFORMANCE DATA

VIBRO-ACOUSTICS®
A Swegon Group company

14 CNM-LV-F2

Circular No-Media
Low velocity silencer
(<750 fpm)

How to Specify Example:

14 X **CNM-LV-F2** X **72**

- **14** — Duct Connection Size
- **CNM-LV-F2** — Silencer Model
- **72** — Silencer Length

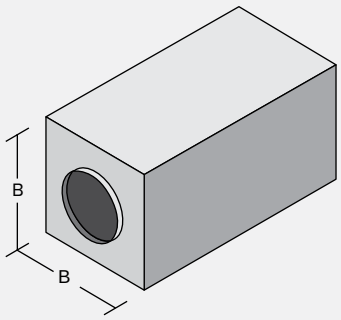

Insertion Loss (IL)

+ : "forward flow" where noise & airflow move in same direction (e.g. supply side)

- : "reverse flow" where noise & airflow move in opposite directions (e.g. return side)

See Silencer Selection Instructions. DIL above 50dB may be limited due to noise flanking around the silencer or along the duct walls. If more than 50dB DIL is required, contact your local Vibro-Acoustics Representative or call **1-800-565-8401**.

Length (in.)	Face Velocity (ft. per min)	Octave Band - Hz/Dynamic Insertion Loss (dB)							
		63	125	250	500	1000	2000	4000	8000
36	- 500	8	9	13	20	16	14	13	12
	0	6	7	11	18	14	13	14	13
	+ 500	8	9	14	21	17	15	15	14
48	- 500	9	10	14	23	20	17	16	13
	0	7	8	12	21	17	17	17	15
	+ 500	9	10	15	23	20	18	18	16
60	- 500	10	11	15	25	23	20	19	15
	0	8	9	13	24	21	20	20	16
	+ 500	10	11	16	26	24	22	21	18
72	- 500	11	12	16	28	26	23	22	17
	0	9	10	13	26	24	24	24	17
	+ 500	11	12	17	28	27	25	25	19

Pressure Drop (PD)

Pressure drops are reported in accordance with ASTM E477 methods and are based upon **ideal** flow conditions (5 diameters of straight duct on silencer inlet and 10 on outlet). Less than ideal conditions will result in an increase in pressure drop due to System Effects. See Silencer System Effects Data.

Duct Connect. Size (in.)	B x B (in.)	Silencer Length (in.)	Weight (lbs)	Face Velocity (ft. per min) / Pressure Drop (in.w.g.)						
				250	500	750	1000	1250	1500	1750
14	**24x24**	36	97	0.03	0.10	0.23	0.40	0.63	0.90	1.23
		48	128	0.03	0.12	0.27	0.48	0.75	1.08	1.47
		60	158	0.04	0.14	0.32	0.56	0.88	1.26	1.72
		72	189	0.04	0.16	0.37	0.65	1.02	1.46	1.99

☐ Acceptable (0 - 0.35") ☐ Caution (>0.35") Pressure Drop may be too high for certain applications

Generated Noise (GN)

@ 1.07 sq.ft. face area

Length (in.)	Face Velocity (ft. per min)	Octave Band - Hz/Generated Noise (dB re 10^{-12} watts)							
		63	125	250	500	1000	2000	4000	8000
All	- 750	53	48	43	42	46	49	46	41
	- 500	52	45	37	38	43	42	39	34
	+ 500	55	49	40	36	42	40	32	24
	+ 750	56	54	46	40	46	47	41	33

16 CNM-LV-F1

Circular No-Media
Low velocity silencer
(<750 fpm)

How to Specify Example:

16 X **CNM-LV-F1** X **72**

- **16** — Duct Connection Size
- **CNM-LV-F1** — Silencer Model
- **72** — Silencer Length

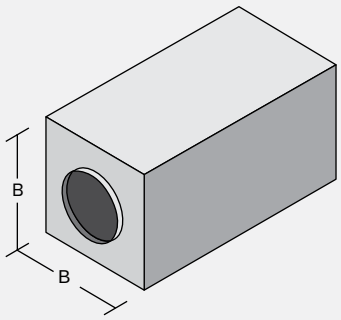

Insertion Loss (IL)

+ : "forward flow" where noise & airflow move in same direction (e.g. supply side)

- : "reverse flow" where noise & airflow move in opposite directions (e.g. return side)

See Silencer Selection Instructions. DIL above 50dB may be limited due to noise flanking around the silencer or along the duct walls. If more than 50dB DIL is required, contact your local Vibro-Acoustics Representative or call **1-800-565-8401**.

Length (in.)	Face Velocity (ft. per min)	Octave Band - Hz/Dynamic Insertion Loss (dB)							
		63	125	250	500	1000	2000	4000	8000
36	- 500	7	10	24	9	12	14	10	6
	0	6	8	22	7	12	15	12	10
	+ 500	7	9	23	9	13	15	13	10
48	- 500	10	11	28	13	18	21	17	12
	0	9	10	24	10	17	20	17	13
	+ 500	10	12	29	13	19	21	18	14
60	- 500	12	14	33	16	22	24	19	15
	0	10	11	26	12	22	25	22	17
	+ 500	13	15	34	17	25	27	23	18
72	- 500	14	16	38	19	28	29	24	20
	0	11	12	28	15	27	30	26	21
	+ 500	16	17	40	22	31	33	28	22

Pressure Drop (PD)

Pressure drops are reported in accordance with ASTM E477 methods and are based upon **ideal** flow conditions (5 diameters of straight duct on silencer inlet and 10 on outlet). Less than ideal conditions will result in an increase in pressure drop due to System Effects. See Silencer System Effects Data.

Duct Connect. Size (in.)	B x B (in.)	Silencer Length (in.)	Weight (lbs)	Face Velocity (ft. per min) / Pressure Drop (in.w.g.)						
				250	500	750	1000	1250	1500	1750
16	**36x36**	36	153	0.02	0.08	0.19	0.33	0.52	0.74	1.01
		48	200	0.03	0.10	0.23	0.40	0.63	0.90	1.23
		60	245	0.03	0.12	0.27	0.48	0.75	1.08	1.47
		72	292	0.03	0.14	0.31	0.55	0.86	1.24	1.68

☐ Acceptable (0 - 0.35") ☐ Caution (>0.35") Pressure Drop may be too high for certain applications

Generated Noise (GN)

@ 1.40 sq.ft. face area

Length (in.)	Face Velocity (ft. per min)	Octave Band - Hz/Generated Noise (dB re 10^{-12} watts)							
		63	125	250	500	1000	2000	4000	8000
All	- 750	53	39	33	37	42	40	28	26
	- 500	54	32	20	29	33	20	20	20
	+ 500	58	44	31	34	34	22	20	20
	+ 750	57	50	41	39	43	38	26	29

CERTIFIED PERFORMANCE DATA

VIBRO-ACOUSTICS®
A Swegon Group company

16 CNM-LV-F2

Circular No-Media
Low velocity silencer
(<750 fpm)

How to Specify Example:

16 X **CNM-LV-F2** X **72**

- **16** — Duct Connection Size
- **CNM-LV-F2** — Silencer Model
- **72** — Silencer Length

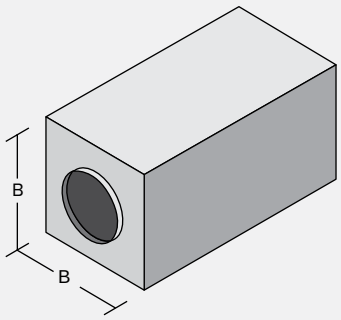

Insertion Loss (IL)

+ : "forward flow" where noise & airflow move in same direction (e.g. supply side)

- : "reverse flow" where noise & airflow move in opposite directions (e.g. return side)

See Silencer Selection Instructions. DIL above 50dB may be limited due to noise flanking around the silencer or along the duct walls. If more than 50dB DIL is required, contact your local Vibro-Acoustics Representative or call **1-800-565-8401**.

Length (in.)	Face Velocity (ft. per min)	Octave Band - Hz/Dynamic Insertion Loss (dB)							
		63	125	250	500	1000	2000	4000	8000
36	- 500	5	10	14	19	17	12	12	9
	0	4	7	13	16	16	13	12	11
	+ 500	5	9	14	19	17	13	13	12
48	- 500	6	10	14	20	18	15	15	10
	0	5	8	13	17	18	15	16	11
	+ 500	6	9	14	20	19	16	17	13
60	- 500	8	9	13	21	20	17	18	11
	0	6	8	13	18	20	18	19	11
	+ 500	7	10	14	21	21	18	20	14
72	- 500	8	9	13	21	21	19	21	12
	0	7	8	13	20	22	20	22	11
	+ 500	8	10	13	22	23	21	23	15

Pressure Drop (PD)

Pressure drops are reported in accordance with ASTM E477 methods and are based upon **ideal** flow conditions (5 diameters of straight duct on silencer inlet and 10 on outlet). Less than ideal conditions will result in an increase in pressure drop due to System Effects. See Silencer System Effects Data.

Duct Connect. Size (in.)	B x B (in.)	Silencer Length (in.)	Weight (lbs)	Face Velocity (ft. per min) / Pressure Drop (in.w.g.)						
				250	500	750	1000	1250	1500	1750
16	**24x24**	36	103	0.02	0.08	0.17	0.31	0.48	0.70	0.95
		48	135	0.02	0.09	0.21	0.37	0.58	0.83	1.13
		60	167	0.03	0.11	0.24	0.43	0.67	0.97	1.32
		72	200	0.03	0.12	0.28	0.49	0.77	1.10	1.50

☐ Acceptable (0 - 0.35") ☐ Caution (>0.35") Pressure Drop may be too high for certain applications

Generated Noise (GN)

@ 1.40 sq.ft. face area

Length (in.)	Face Velocity (ft. per min)	Octave Band - Hz/Generated Noise (dB re 10^{-12} watts)							
		63	125	250	500	1000	2000	4000	8000
All	- 750	54	38	33	37	42	40	28	27
	- 500	55	31	20	28	31	20	20	20
	+ 500	57	44	30	34	34	22	20	20
	+ 750	56	51	41	40	42	39	27	31

CERTIFIED PERFORMANCE DATA

VIBRO-ACOUSTICS®
A Swegon Group company

8 CNM-MV-F1

Circular No-Media
Medium velocity silencer
(<1250 fpm)

How to Specify Example:

8 X **CNM-MV-F1** X **72**

- **8** — Duct Connection Size
- **CNM-MV-F1** — Silencer Model
- **72** — Silencer Length

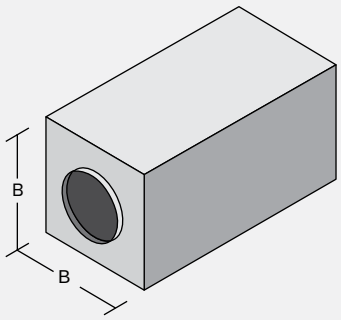

Insertion Loss (IL)

+ : "forward flow" where noise & airflow move in same direction (e.g. supply side)

- : "reverse flow" where noise & airflow move in opposite directions (e.g. return side)

See Silencer Selection Instructions. DIL above 50dB may be limited due to noise flanking around the silencer or along the duct walls. If more than 50dB DIL is required, contact your local Vibro-Acoustics Representative or call **1-800-565-8401**.

Length (in.)	Face Velocity (ft. per min)	Octave Band - Hz/Dynamic Insertion Loss (dB)							
		63	125	250	500	1000	2000	4000	8000
36	- 1000	9	16	34	12	10	15	14	10
	0	10	14	32	7	8	16	16	12
	+ 1000	10	17	35	11	10	18	17	12
48	- 1000	10	17	34	12	10	18	18	13
	0	12	14	31	8	8	19	19	13
	+ 1000	11	17	36	12	11	21	21	14
60	- 1000	11	17	35	13	11	21	22	15
	0	12	13	30	9	9	23	22	15
	+ 1000	13	18	36	13	12	25	24	16
72	- 1000	12	18	35	13	11	26	26	18
	0	12	13	29	10	9	25	25	17
	+ 1000	15	19	37	14	12	28	28	19

Pressure Drop (PD)

Pressure drops are reported in accordance with ASTM E477 methods and are based upon **ideal** flow conditions (5 diameters of straight duct on silencer inlet and 10 on outlet). Less than ideal conditions will result in an increase in pressure drop due to System Effects. See Silencer System Effects Data.

Duct Connect. Size (in.)	B x B (in.)	Silencer Length (in.)	Weight (lbs)	Face Velocity (ft. per min) / Pressure Drop (in.w.g.)						
				500	750	1000	1250	1500	1750	2000
8	**30x30**	36	106	0.05	0.11	0.19	0.29	0.42	0.58	0.75
		48	139	0.05	0.12	0.22	0.34	0.49	0.67	0.88
		60	172	0.06	0.14	0.25	0.39	0.56	0.76	1.00
		72	204	0.07	0.16	0.28	0.44	0.63	0.86	1.12

☐ Acceptable (0 - 0.35") ☐ Caution (>0.35") Pressure Drop may be too high for certain applications

Generated Noise (GN)

@ 0.35 sq.ft. face area

Length (in.)	Face Velocity (ft. per min)	Octave Band - Hz/Generated Noise (dB re 10^{-12} watts)							
		63	125	250	500	1000	2000	4000	8000
All	- 1250	56	50	49	47	49	52	51	41
	- 750	55	45	44	41	45	46	41	26
	+ 750	54	49	43	40	43	46	40	24
	+ 1250	56	53	50	46	47	50	47	36

CERTIFIED PERFORMANCE DATA

VIBRO-ACOUSTICS®
A Swegon Group company

8 CNM-MV-F2

Circular No-Media
Medium velocity silencer
(<1250 fpm)

How to Specify Example:

8 X **CNM-MV-F2** X **72**

- **8** — Duct Connection Size
- **CNM-MV-F2** — Silencer Model
- **72** — Silencer Length

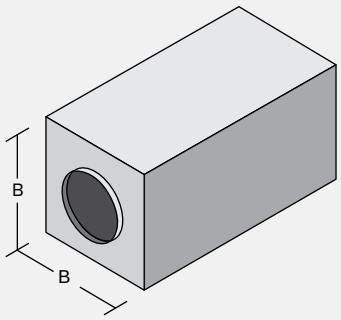

Insertion Loss (IL)

+ : "forward flow" where noise & airflow move in same direction (e.g. supply side)

- : "reverse flow" where noise & airflow move in opposite directions (e.g. return side)

See Silencer Selection Instructions. DIL above 50dB may be limited due to noise flanking around the silencer or along the duct walls. If more than 50dB DIL is required, contact your local Vibro-Acoustics Representative or call **1-800-565-8401**.

Length (in.)	Face Velocity (ft. per min)	Octave Band - Hz/Dynamic Insertion Loss (dB)							
		63	125	250	500	1000	2000	4000	8000
36	- 1000	8	13	22	22	14	18	14	12
	0	8	12	20	17	12	19	16	15
	+ 1000	10	15	25	23	16	21	17	15
48	- 1000	8	13	23	26	16	21	19	14
	0	9	12	20	21	14	22	20	16
	+ 1000	10	15	25	27	18	24	22	17
60	- 1000	9	14	23	29	18	25	24	16
	0	9	11	21	25	16	25	25	18
	+ 1000	10	14	26	30	20	27	27	18
72	- 1000	9	14	24	33	21	28	29	19
	0	9	11	21	28	18	29	30	19
	+ 1000	10	14	26	34	22	30	32	20

Pressure Drop (PD)

Pressure drops are reported in accordance with ASTM E477 methods and are based upon **ideal** flow conditions (5 diameters of straight duct on silencer inlet and 10 on outlet). Less than ideal conditions will result in an increase in pressure drop due to System Effects. See Silencer System Effects Data.

Duct Connect. Size (in.)	B x B (in.)	Silencer Length (in.)	Weight (lbs)	Face Velocity (ft. per min) / Pressure Drop (in.w.g.)						
				500	750	1000	1250	1500	1750	2000
8	**20x20**	36	68	0.05	0.12	0.21	0.33	0.47	0.64	0.84
		48	90	0.06	0.14	0.24	0.38	0.55	0.75	0.98
		60	113	0.07	0.16	0.28	0.44	0.63	0.85	1.12
		72	134	0.08	0.18	0.31	0.49	0.71	0.96	1.25

☐ Acceptable (0 - 0.35") ☐ Caution (>0.35") Pressure Drop may be too high for certain applications

Generated Noise (GN)

@ 0.35 sq.ft. face area

Length (in.)	Face Velocity (ft. per min)	Octave Band - Hz/Generated Noise (dB re 10^{-12} watts)							
		63	125	250	500	1000	2000	4000	8000
All	- 1250	56	50	49	48	49	53	54	43
	- 750	55	45	44	43	45	48	45	28
	+ 750	54	47	42	39	43	47	41	28
	+ 1250	55	52	49	45	47	51	48	39

CERTIFIED PERFORMANCE DATA

VIBRO-ACOUSTICS®
A Swegon Group company

10 CNM-MV-F1

Circular No-Media
Medium velocity silencer
(<1250 fpm)

How to Specify Example:

10 X **CNM-MV-F1** X **72**

- **10** — Duct Connection Size
- **CNM-MV-F1** — Silencer Model
- **72** — Silencer Length

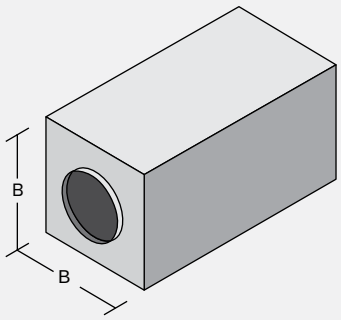

Insertion Loss (IL)

+ : "forward flow" where noise & airflow move in same direction (e.g. supply side)

- : "reverse flow" where noise & airflow move in opposite directions (e.g. return side)

See Silencer Selection Instructions. DIL above 50dB may be limited due to noise flanking around the silencer or along the duct walls. If more than 50dB DIL is required, contact your local Vibro-Acoustics Representative or call **1-800-565-8401**.

Length (in.)	Face Velocity (ft. per min)	Octave Band - Hz/Dynamic Insertion Loss (dB)							
		63	125	250	500	1000	2000	4000	8000
36	- 1000	12	14	30	12	10	14	14	11
	0	11	12	26	8	9	15	15	13
	+ 1000	12	14	29	11	11	17	17	14
48	- 1000	13	16	32	14	12	19	17	14
	0	11	12	27	10	10	19	19	16
	+ 1000	13	16	32	14	13	21	20	17
60	- 1000	14	17	34	17	14	23	21	16
	0	11	13	29	12	11	23	22	18
	+ 1000	15	17	35	16	15	25	24	19
72	- 1000	15	18	37	19	16	27	25	18
	0	12	13	30	14	12	27	26	20
	+ 1000	16	18	37	19	17	29	27	21

Pressure Drop (PD)

Pressure drops are reported in accordance with ASTM E477 methods and are based upon **ideal** flow conditions (5 diameters of straight duct on silencer inlet and 10 on outlet). Less than ideal conditions will result in an increase in pressure drop due to System Effects. See Silencer System Effects Data.

Duct Connect. Size (in.)	B x B (in.)	Silencer Length (in.)	Weight (lbs)	Face Velocity (ft. per min) / Pressure Drop (in.w.g.)						
				500	750	1000	1250	1500	1750	2000
10	**30x30**	36	110	0.05	0.12	021	0.34	0.48	0.66	0.86
		48	144	0.06	0.14	0.25	0.39	0.56	0.76	0.99
		60	179	0.07	0.16	0.28	0.44	0.64	0.87	1.13
		72	212	0.08	0.18	0.32	0.50	0.71	0.97	1.27

☐ Acceptable (0 - 0.35") ☐ Caution (>0.35") Pressure Drop may be too high for certain applications

Generated Noise (GN)

@ 0.55 sq.ft. face area

Length (in.)	Face Velocity (ft. per min)	Octave Band - Hz/Generated Noise (dB re 10^{-12} watts)							
		63	125	250	500	1000	2000	4000	8000
All	- 1250	56	53	52	49	50	54	55	47
	- 750	55	48	46	43	46	49	46	33
	+ 750	53	50	42	38	42	45	38	27
	+ 1250	55	55	52	46	47	52	49	40

CERTIFIED PERFORMANCE DATA

VIBRO-ACOUSTICS®
A Swegon Group company

10 CNM-MV-F2

Circular No-Media
Medium velocity silencer
(<1250 fpm)

How to Specify Example:

10 X **CNM-MV-F2** X **72**

- **10** — Duct Connection Size
- **CNM-MV-F2** — Silencer Model
- **72** — Silencer Length

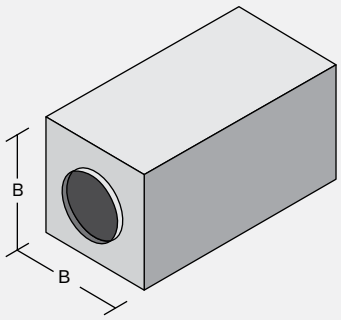

Insertion Loss (IL)

+ : "forward flow" where noise & airflow move in same direction (e.g. supply side)

- : "reverse flow" where noise & airflow move in opposite directions (e.g. return side)

See Silencer Selection Instructions. DIL above 50dB may be limited due to noise flanking around the silencer or along the duct walls. If more than 50dB DIL is required, contact your local Vibro-Acoustics Representative or call **1-800-565-8401**.

Length (in.)	Face Velocity (ft. per min)	Octave Band - Hz/Dynamic Insertion Loss (dB)							
		63	125	250	500	1000	2000	4000	8000
36	- 1000	10	11	17	22	13	15	13	12
	0	8	9	15	18	11	16	15	14
	+ 1000	10	12	19	22	15	17	16	15
48	- 1000	10	12	19	26	17	19	17	14
	0	9	10	16	22	14	19	18	16
	+ 1000	11	12	20	26	18	21	20	17
60	- 1000	11	12	20	30	20	22	21	14
	0	9	10	16	26	17	22	22	18
	+ 1000	12	13	21	30	21	24	24	19
72	- 1000	12	13	21	34	23	26	25	18
	0	9	10	17	30	20	26	26	20
	+ 1000	12	13	22	35	24	28	28	20

Pressure Drop (PD)

Pressure drops are reported in accordance with ASTM E477 methods and are based upon **ideal** flow conditions (5 diameters of straight duct on silencer inlet and 10 on outlet). Less than ideal conditions will result in an increase in pressure drop due to System Effects. See Silencer System Effects Data.

Duct Connect. Size (in.)	B x B (in.)	Silencer Length (in.)	Weight (lbs)	Face Velocity (ft. per min) / Pressure Drop (in.w.g.)						
				500	750	1000	1250	1500	1750	2000
10	**20x20**	36	73	0.05	0.12	0.21	0.33	0.48	0.65	0.85
		48	97	0.06	0.14	0.24	0.38	0.55	0.74	0.97
		60	120	0.07	0.15	0.27	0.43	0.61	0.84	1.09
		72	142	0.08	0.17	0.30	0.47	0.68	0.93	1.21

☐ Acceptable (0 - 0.35") ☐ Caution (>0.35") Pressure Drop may be too high for certain applications

Generated Noise (GN)

@ 0.55 sq.ft. face area

Length (in.)	Face Velocity (ft. per min)	Octave Band - Hz/Generated Noise (dB re 10^{-12} watts)							
		63	125	250	500	1000	2000	4000	8000
All	- 1250	56	53	51	49	51	55	57	49
	- 750	54	49	45	44	47	50	48	35
	+ 750	54	51	42	37	42	44	37	27
	+ 1250	56	55	51	45	47	52	49	40

CERTIFIED PERFORMANCE DATA

VIBRO-ACOUSTICS®
A Swegon Group company

12 CNM-MV-F1

Circular No-Media
Medium velocity silencer
(<1250 fpm)

How to Specify Example:

12 X **CNM-MV-F1** X **72**

- **12** — Duct Connection Size
- **CNM-MV-F1** — Silencer Model
- **72** — Silencer Length

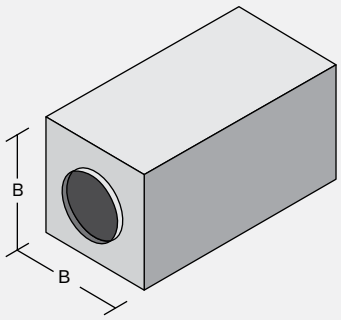

Insertion Loss (IL)

+ : "forward flow" where noise & airflow move in same direction (e.g. supply side)

- : "reverse flow" where noise & airflow move in opposite directions (e.g. return side)

See Silencer Selection Instructions. DIL above 50dB may be limited due to noise flanking around the silencer or along the duct walls. If more than 50dB DIL is required, contact your local Vibro-Acoustics Representative or call **1-800-565-8401**.

Length (in.)	Face Velocity (ft. per min)	Octave Band - Hz/Dynamic Insertion Loss (dB)							
		63	125	250	500	1000	2000	4000	8000
36	- 1000	12	13	26	13	11	14	14	13
	0	9	10	19	9	9	14	15	15
	+ 1000	11	12	24	12	12	16	16	17
48	- 1000	13	14	30	16	14	19	17	15
	0	10	11	23	12	11	18	19	18
	+ 1000	13	14	29	19	15	21	20	19
60	- 1000	15	16	34	20	17	24	20	16
	0	11	12	27	15	14	23	22	20
	+ 1000	14	16	33	20	18	26	24	21
72	- 1000	16	18	39	24	21	29	24	18
	0	12	13	31	18	16	28	26	23
	+ 1000	16	17	38	24	21	31	27	24

Pressure Drop (PD)

Pressure drops are reported in accordance with ASTM E477 methods and are based upon **ideal** flow conditions (5 diameters of straight duct on silencer inlet and 10 on outlet). Less than ideal conditions will result in an increase in pressure drop due to System Effects. See Silencer System Effects Data.

Duct Connect. Size (in.)	B x B (in.)	Silencer Length (in.)	Weight (lbs)	Face Velocity (ft. per min) / Pressure Drop (in.w.g.)						
				500	750	1000	1250	1500	1750	2000
12	**30x30**	36	115	0.06	0.14	0.24	0.38	0.54	0.74	0.96
		48	150	0.07	0.16	0.28	0.43	0.63	0.85	1.11
		60	186	0.08	0.18	0.32	0.49	0.71	0.97	1.26
		72	221	0.09	0.20	0.35	0.55	0.80	1.08	1.41

☐ Acceptable (0 - 0.35") ☐ Caution (>0.35") Pressure Drop may be too high for certain applications

Generated Noise (GN)

@ 0.79 sq.ft. face area

Length (in.)	Face Velocity (ft. per min)	Octave Band - Hz/Generated Noise (dB re 10^{-12} watts)							
		63	125	250	500	1000	2000	4000	8000
All	- 1250	56	57	54	50	51	57	60	54
	- 750	54	52	47	44	47	52	52	41
	+ 750	52	52	41	37	41	44	37	30
	+ 1250	55	58	53	47	48	53	52	43

CERTIFIED PERFORMANCE DATA

VIBRO-ACOUSTICS®
A Swegon Group company

12 CNM-MV-F2

Circular No-Media
Medium velocity silencer
(<1250 fpm)

How to Specify Example:

12 X **CNM-MV-F2** X **72**

- 12 — Duct Connection Size
- CNM-MV-F2 — Silencer Model
- 72 — Silencer Length

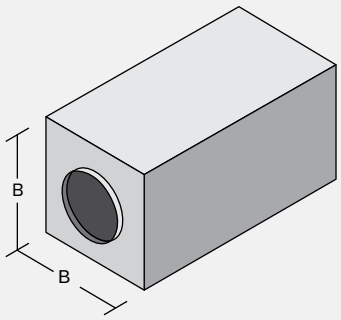

Insertion Loss (IL)

+ : "forward flow" where noise & airflow move in same direction (e.g. supply side)

- : "reverse flow" where noise & airflow move in opposite directions (e.g. return side)

See Silencer Selection Instructions. DIL above 50dB may be limited due to noise flanking around the silencer or along the duct walls. If more than 50dB DIL is required, contact your local Vibro-Acoustics Representative or call **1-800-565-8401**.

Length (in.)	Face Velocity (ft. per min)	Octave Band - Hz/Dynamic Insertion Loss (dB)							
		63	125	250	500	1000	2000	4000	8000
36	- 1000	8	9	13	21	13	13	13	12
	0	6	6	10	20	10	12	14	14
	+ 1000	7	8	13	21	14	15	15	15
48	- 1000	9	10	14	26	17	16	15	14
	0	7	8	11	24	14	16	17	16
	+ 1000	9	10	15	26	18	18	18	17
60	- 1000	10	11	16	30	21	20	18	16
	0	8	9	12	28	18	20	19	17
	+ 1000	10	11	16	31	22	22	21	19
72	- 1000	11	13	18	35	25	24	21	18
	0	9	10	13	32	22	23	22	20
	+ 1000	11	13	18	35	26	26	24	21

Pressure Drop (PD)

Pressure drops are reported in accordance with ASTM E477 methods and are based upon **ideal** flow conditions (5 diameters of straight duct on silencer inlet and 10 on outlet). Less than ideal conditions will result in an increase in pressure drop due to System Effects. See Silencer System Effects Data.

Duct Connect. Size (in.)	B x B (in.)	Silencer Length (in.)	Weight (lbs)	Face Velocity (ft. per min) / Pressure Drop (in.w.g.)						
				500	750	1000	1250	1500	1750	2000
12	**20x20**	36	77	0.05	0.12	0.21	0.33	0.48	0.65	0.85
		48	102	0.06	0.14	0.24	0.38	0.54	0.74	0.96
		60	127	0.07	0.15	0.27	0.42	0.60	0.82	1.07
		72	152	0.07	0.17	0.29	0.46	0.66	0.90	1.17

☐ Acceptable (0 - 0.35") ☐ Caution (>0.35") Pressure Drop may be too high for certain applications

Generated Noise (GN)

@ 0.79 sq.ft. face area

Length (in.)	Face Velocity (ft. per min)	Octave Band - Hz/Generated Noise (dB re 10^{-12} watts)							
		63	125	250	500	1000	2000	4000	8000
All	- 1250	55	57	53	50	52	57	61	55
	- 750	53	52	47	45	48	52	52	42
	+ 750	53	54	42	35	41	41	34	27
	+ 1250	56	58	53	45	48	53	51	42

14 CNM-MV-F1

Circular No-Media
Medium velocity silencer
(<1250 fpm)

How to Specify Example:

14 X **CNM-MV-F1** X **72**

- **14** — Duct Connection Size
- **CNM-MV-F1** — Silencer Model
- **72** — Silencer Length

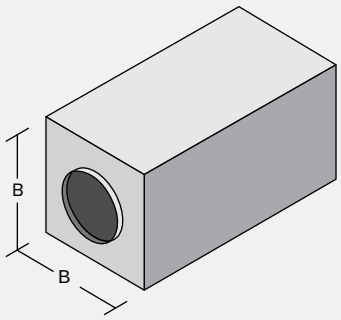

Insertion Loss (IL)

+ : "forward flow" where noise & airflow move in same direction (e.g. supply side)

- : "reverse flow" where noise & airflow move in opposite directions (e.g. return side)

See Silencer Selection Instructions. DIL above 50dB may be limited due to noise flanking around the silencer or along the duct walls. If more than 50dB DIL is required, contact your local Vibro-Acoustics Representative or call **1-800-565-8401**.

Length (in.)	Face Velocity (ft. per min)	Octave Band - Hz/Dynamic Insertion Loss (dB)							
		63	125	250	500	1000	2000	4000	8000
36	- 1000	9	11	24	10	10	13	11	8
	0	8	9	20	7	10	13	12	11
	+ 1000	9	10	23	10	11	15	13	12
48	- 1000	11	12	28	13	13	17	14	11
	0	9	10	23	10	13	18	16	14
	+ 1000	11	12	27	13	15	20	17	15
60	- 1000	13	14	33	15	17	22	18	14
	0	10	11	25	12	17	23	20	17
	+ 1000	13	14	32	17	19	25	21	18
72	- 1000	14	16	37	18	21	27	21	17
	0	11	12	28	14	20	27	23	20
	+ 1000	15	17	37	20	23	30	25	21

Pressure Drop (PD)

Pressure drops are reported in accordance with ASTM E477 methods and are based upon **ideal** flow conditions (5 diameters of straight duct on silencer inlet and 10 on outlet). Less than ideal conditions will result in an increase in pressure drop due to System Effects. See Silencer System Effects Data.

Duct Connect. Size (in.)	B x B (in.)	Silencer Length (in.)	Weight (lbs)	Face Velocity (ft. per min) / Pressure Drop (in.w.g.)						
				500	750	1000	1250	1500	1750	2000
14	**36x36**	36	146	0.04	0.10	0.17	0.27	0.39	0.54	0.70
		48	190	0.05	0.12	0.21	0.32	0.47	0.64	0.83
		60	235	0.06	0.14	0.24	0.38	0.54	0.74	0.96
		72	280	0.07	0.15	0.27	0.43	0.62	0.84	1.10

☐ Acceptable (0 - 0.35") ☐ Caution (>0.35") Pressure Drop may be too high for certain applications

Generated Noise (GN)

@ 1.07 sq.ft. face area

Length (in.)	Face Velocity (ft. per min)	Octave Band - Hz/Generated Noise (dB re 10^{-12} watts)							
		63	125	250	500	1000	2000	4000	8000
All	- 1250	57	55	53	50	52	57	59	53
	- 750	55	50	46	44	47	50	48	38
	+ 750	55	54	45	40	45	45	40	32
	+ 1250	57	59	55	49	51	55	54	46

14 CNM-MV-F2

Circular No-Media
Medium velocity silencer
(<1250 fpm)

How to Specify Example:

14 X **CNM-MV-F2** X **72**

- 14 — Duct Connection Size
- CNM-MV-F2 — Silencer Model
- 72 — Silencer Length

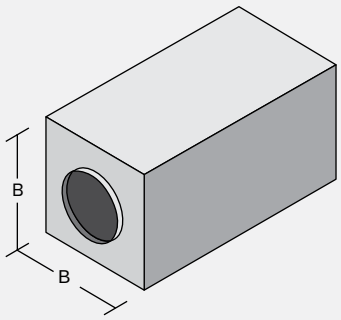

Insertion Loss (IL)

+ : "forward flow" where noise & airflow move in same direction (e.g. supply side)

- : "reverse flow" where noise & airflow move in opposite directions (e.g. return side)

See Silencer Selection Instructions. DIL above 50dB may be limited due to noise flanking around the silencer or along the duct walls. If more than 50dB DIL is required, contact your local Vibro-Acoustics Representative or call **1-800-565-8401**.

Length (in.)	Face Velocity (ft. per min)	Octave Band - Hz/Dynamic Insertion Loss (dB)							
		63	125	250	500	1000	2000	4000	8000
36	- 1000	8	9	13	20	14	11	11	9
	0	6	7	11	17	13	12	12	11
	+ 1000	8	9	14	20	15	13	14	13
48	- 1000	8	9	14	23	16	14	14	10
	0	7	7	12	20	15	15	15	12
	+ 1000	8	9	14	23	17	16	16	14
60	- 1000	9	10	14	25	18	17	17	12
	0	7	8	12	22	17	17	18	13
	+ 1000	9	10	14	26	19	19	19	15
72	- 1000	9	10	15	28	20	19	19	13
	0	8	9	13	25	19	20	21	14
	+ 1000	9	10	15	29	21	21	22	16

Pressure Drop (PD)

Pressure drops are reported in accordance with ASTM E477 methods and are based upon **ideal** flow conditions (5 diameters of straight duct on silencer inlet and 10 on outlet). Less than ideal conditions will result in an increase in pressure drop due to System Effects. See Silencer System Effects Data.

Duct Connect. Size (in.)	B x B (in.)	Silencer Length (in.)	Weight (lbs)	Face Velocity (ft. per min) / Pressure Drop (in.w.g.)						
				500	750	1000	1250	1500	1750	2000
14	**24x24**	36	97	0.04	0.09	0.16	0.25	0.36	0.49	0.64
		48	128	0.05	0.10	0.18	0.28	0.41	0.56	0.73
		60	158	0.05	0.11	0.20	0.32	0.46	0.62	0.81
		72	189	0.06	0.13	0.22	0.35	0.51	0.69	0.90

☐ Acceptable (0 - 0.35") ☐ Caution (>0.35") Pressure Drop may be too high for certain applications

Generated Noise (GN)

@ 1.07 sq.ft. face area

Length (in.)	Face Velocity (ft. per min)	Octave Band - Hz/Generated Noise (dB re 10^{-12} watts)							
		63	125	250	500	1000	2000	4000	8000
All	- 1250	56	56	53	50	53	57	59	53
	- 750	55	50	45	44	48	50	48	39
	+ 750	56	55	46	39	45	44	39	31
	+ 1250	58	59	55	48	51	54	53	45

16 CNM-MV-F1

Circular No-Media
Medium velocity silencer
(<1250 fpm)

How to Specify Example:

16 X **CNM-MV-F1** X **72**

- 16 — Duct Connection Size
- CNM-MV-F1 — Silencer Model
- 72 — Silencer Length

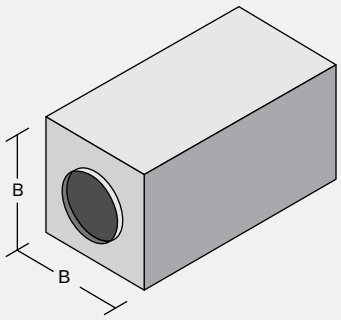

Insertion Loss (IL)

+ : "forward flow" where noise & airflow move in same direction (e.g. supply side)

- : "reverse flow" where noise & airflow move in opposite directions (e.g. return side)

See Silencer Selection Instructions. DIL above 50dB may be limited due to noise flanking around the silencer or along the duct walls. If more than 50dB DIL is required, contact your local Vibro-Acoustics Representative or call **1-800-565-8401**.

Length (in.)	Face Velocity (ft. per min)	Octave Band - Hz/Dynamic Insertion Loss (dB)							
		63	125	250	500	1000	2000	4000	8000
36	- 1000	7	8	23	8	9	11	8	3
	0	5	8	20	6	10	13	9	7
	+ 1000	6	8	21	7	10	13	10	7
48	- 1000	9	10	27	9	13	15	11	7
	0	8	9	22	8	15	17	13	10
	+ 1000	9	10	26	10	15	18	14	11
60	- 1000	10	12	31	11	17	20	15	12
	0	9	10	24	9	20	22	17	13
	+ 1000	12	13	32	13	20	24	18	15
72	- 1000	12	13	35	12	21	24	19	16
	0	10	11	25	11	24	26	21	16
	+ 1000	14	16	37	17	25	29	22	19

Pressure Drop (PD)

Pressure drops are reported in accordance with ASTM E477 methods and are based upon **ideal** flow conditions (5 diameters of straight duct on silencer inlet and 10 on outlet). Less than ideal conditions will result in an increase in pressure drop due to System Effects. See Silencer System Effects Data.

Duct Connect. Size (in.)	B x B (in.)	Silencer Length (in.)	Weight (lbs)	Face Velocity (ft. per min) / Pressure Drop (in.w.g.)						
				500	750	1000	1250	1500	1750	2000
16	**36x36**	36	152	0.03	0.06	0.11	0.17	0.25	0.33	0.44
		48	198	0.03	0.08	0.14	0.21	0.31	0.42	0.55
		60	244	0.04	0.09	0.17	0.26	0.37	0.51	0.66
		72	290	0.05	0.11	0.19	0.30	0.44	0.59	0.78

☐ Acceptable (0 - 0.35") ☐ Caution (>0.35") Pressure Drop may be too high for certain applications

Generated Noise (GN)

@ 1.40 sq.ft. face area

Length (in.)	Face Velocity (ft. per min)	Octave Band - Hz/Generated Noise (dB re 10^{-12} watts)							
		63	125	250	500	1000	2000	4000	8000
All	- 1250	58	53	51	49	56	58	57	50
	- 750	58	46	42	43	49	46	41	32
	+ 750	63	58	54	47	51	49	48	38
	+ 1250	61	63	60	52	56	57	57	51

16 CNM-MV-F2

Circular No-Media
Medium velocity silencer
(<1250 fpm)

How to Specify Example:

16 X **CNM-MV-F2** X **72**

- 16 — Duct Connection Size
- CNM-MV-F2 — Silencer Model
- 72 — Silencer Length

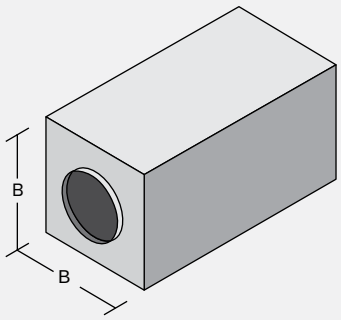

Insertion Loss (IL)

+ : "forward flow" where noise & airflow move in same direction (e.g. supply side)

- : "reverse flow" where noise & airflow move in opposite directions (e.g. return side)

See Silencer Selection Instructions. DIL above 50dB may be limited due to noise flanking around the silencer or along the duct walls. If more than 50dB DIL is required, contact your local Vibro-Acoustics Representative or call **1-800-565-8401**.

Length (in.)	Face Velocity (ft. per min)	16Octave Band - Hz/Dynamic Insertion Loss (dB)							
		63	125	250	500	1000	2000	4000	8000
36	- 1000	5	9	14	19	14	10	10	7
	0	4	7	13	15	15	11	11	8
	+ 1000	8	9	14	19	16	12	12	10
48	- 1000	6	9	13	20	15	12	12	7
	0	4	7	13	16	16	13	14	8
	+ 1000	6	9	13	20	16	14	15	11
60	- 1000	8	8	12	20	15	13	15	8
	0	5	7	12	17	16	15	17	8
	+ 1000	6	8	12	21	16	15	18	11
72	- 1000	7	8	12	21	15	15	18	8
	0	6	7	12	18	17	17	19	9
	+ 1000	6	7	12	22	16	17	20	12

Pressure Drop (PD)

Pressure drops are reported in accordance with ASTM E477 methods and are based upon **ideal** flow conditions (5 diameters of straight duct on silencer inlet and 10 on outlet). Less than ideal conditions will result in an increase in pressure drop due to System Effects. See Silencer System Effects Data.

Duct Connect. Size (in.)	B x B (in.)	Silencer Length (in.)	Weight (lbs)	Face Velocity (ft. per min) / Pressure Drop (in.w.g.)						
				500	750	1000	1250	1500	1750	2000
16	**24x24**	36	102	0.03	0.06	0.11	0.17	0.24	0.33	0.43
		48	133	0.03	0.07	0.12	0.19	0.28	0.38	0.49
		60	166	0.03	0.08	0.14	0.22	0.31	0.43	0.56
		72	198	0.04	0.09	0.16	0.24	0.35	0.48	0.62

☐ Acceptable (0 - 0.35") ☐ Caution (>0.35") Pressure Drop may be too high for certain applications

Generated Noise (GN)

@ 1.40 sq.ft. face area

Length (in.)	Face Velocity (ft. per min)	Octave Band - Hz/Generated Noise (dB re 10^{-12} watts)							
		63	125	250	500	1000	2000	4000	8000
All	- 1250	59	53	52	49	55	57	56	49
	- 750	58	46	42	42	48	46	40	31
	+ 750	62	58	53	48	51	50	49	40
	+ 1250	61	63	60	53	56	58	58	52

CERTIFIED PERFORMANCE DATA

VIBRO-ACOUSTICS®
A Swegon Group company

8 CNM-HV-F1

Circular No-Media
High velocity silencer
(<2000 fpm)

How to Specify Example:

8 X **CNM-HV-F1** X **72**

- **8** — Duct Connection Size
- **CNM-HV-F1** — Silencer Model
- **72** — Silencer Length

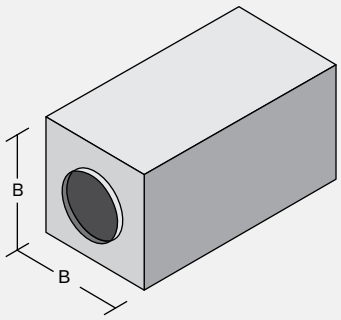

Insertion Loss (IL)

+ : "forward flow" where noise & airflow move in same direction (e.g. supply side)

- : "reverse flow" where noise & airflow move in opposite directions (e.g. return side)

See Silencer Selection Instructions. DIL above 50dB may be limited due to noise flanking around the silencer or along the duct walls. If more than 50dB DIL is required, contact your local Vibro-Acoustics Representative or call **1-800-565-8401**.

Length (in.)	Face Velocity (ft. per min)	Octave Band - Hz/Dynamic Insertion Loss (dB)							
		63	125	250	500	1000	2000	4000	8000
36	- 1500	13	16	37	10	8	11	10	8
	0	12	14	35	8	8	12	11	9
	+ 1500	11	16	37	10	9	13	12	9
48	- 1500	13	18	38	11	9	13	13	10
	0	13	15	36	9	8	14	14	11
	+ 1500	12	18	38	11	10	15	14	11
60	- 1500	13	20	40	12	9	15	16	12
	0	14	16	37	10	9	17	16	12
	+ 1500	13	20	40	12	11	17	17	13
72	- 1500	13	21	41	13	10	17	19	14
	0	15	17	38	11	9	19	19	13
	+ 1500	14	21	42	13	12	20	20	14

Pressure Drop (PD)

Pressure drops are reported in accordance with ASTM E477 methods and are based upon **ideal** flow conditions (5 diameters of straight duct on silencer inlet and 10 on outlet). Less than ideal conditions will result in an increase in pressure drop due to System Effects. See Silencer System Effects Data.

Duct Connect. Size (in.)	B x B (in.)	Silencer Length (in.)	Weight (lbs)	Face Velocity (ft. per min) / Pressure Drop (in.w.g.)						
				750	1000	1250	1500	1750	2000	2500
8	**30x30**	36	106	0.03	0.06	0.10	0.14	0.19	0.25	0.31
		48	139	0.04	0.07	0.11	0.16	0.21	0.28	0.35
		60	172	0.04	0.08	0.12	0.17	0.24	0.31	0.39
		72	204	0.05	0.09	0.13	0.19	0.26	0.34	0.43

☐ Acceptable (0 - 0.35") ☐ Caution (>0.35") Pressure Drop may be too high for certain applications

Generated Noise (GN)

@ 0.35 sq.ft. face area

Length (in.)	Face Velocity (ft. per min)	Octave Band - Hz/Generated Noise (dB re 10^{-12} watts)							
		63	125	250	500	1000	2000	4000	8000
All	- 2000	58	54	53	52	52	56	58	51
	- 1250	55	47	45	45	46	49	45	30
	+ 1250	58	54	48	43	45	47	44	31
	+ 2000	58	59	57	52	49	53	53	46

CERTIFIED PERFORMANCE DATA

VIBRO-ACOUSTICS®
A Swegon Group company

8 CNM-HV-F2

Circular No-Media
High velocity silencer
(<2000 fpm)

How to Specify Example:

8 X **CNM-HV-F2** X **72**

- 8 — Duct Connection Size
- CNM-HV-F2 — Silencer Model
- 72 — Silencer Length

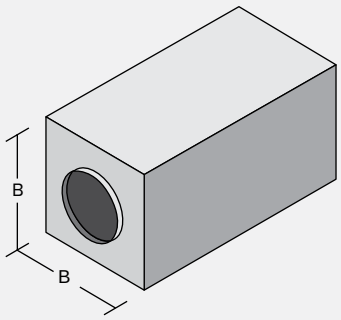

Insertion Loss (IL)

+ : "forward flow" where noise & airflow move in same direction (e.g. supply side)

- : "reverse flow" where noise & airflow move in opposite directions (e.g. return side)

See Silencer Selection Instructions. DIL above 50dB may be limited due to noise flanking around the silencer or along the duct walls. If more than 50dB DIL is required, contact your local Vibro-Acoustics Representative or call **1-800-565-8401**.

Length (in.)	Face Velocity (ft. per min)	Octave Band - Hz/Dynamic Insertion Loss (dB)							
		63	125	250	500	1000	2000	4000	8000
36	- 1500	7	13	19	23	11	13	12	11
	0	5	9	15	20	10	13	12	13
	+ 1500	5	12	19	26	14	16	16	16
48	- 1500	9	15	23	25	12	14	14	12
	0	8	10	18	21	11	14	14	14
	+ 1500	6	14	23	28	15	17	18	17
60	- 1500	10	16	27	27	14	15	16	14
	0	10	12	21	23	12	15	15	15
	+ 1500	7	15	27	30	16	18	19	18
72	- 1500	12	18	31	29	15	17	17	15
	0	12	13	24	24	13	16	17	16
	+ 1500	7	17	30	33	18	19	21	19

Pressure Drop (PD)

Pressure drops are reported in accordance with ASTM E477 methods and are based upon **ideal** flow conditions (5 diameters of straight duct on silencer inlet and 10 on outlet). Less than ideal conditions will result in an increase in pressure drop due to System Effects. See Silencer System Effects Data.

Duct Connect. Size (in.)	B x B (in.)	Silencer Length (in.)	Weight (lbs)	Face Velocity (ft. per min) / Pressure Drop (in.w.g.)						
				750	1000	1250	1500	1750	2000	2500
8	**20x20**	36	68	0.06	0.10	0.16	0.23	0.31	0.40	0.51
		48	90	0.06	0.10	0.16	0.23	0.32	0.41	0.52
		60	113	0.06	0.11	0.17	0.24	0.33	0.43	0.54
		72	134	0.06	0.11	0.17	0.25	0.34	0.44	0.56

☐ Acceptable (0 - 0.35") ☐ Caution (>0.35") Pressure Drop may be too high for certain applications

Generated Noise (GN)

@ 0.35 sq.ft. face area

Length (in.)	Face Velocity (ft. per min)	Octave Band - Hz/Generated Noise (dB re 10^{-12} watts)							
		63	125	250	500	1000	2000	4000	8000
All	- 2000	58	54	52	52	52	56	58	51
	- 1250	55	47	45	45	46	49	45	30
	+ 1250	58	54	48	43	45	47	44	31
	+ 2000	58	59	57	52	49	53	53	46

CERTIFIED PERFORMANCE DATA

VIBRO-ACOUSTICS®
A Swegon Group company

10 CNM-HV-F1

Circular No-Media
High velocity silencer
(<2000 fpm)

How to Specify Example:

10 X **CNM-HV-F1** X **72**

- **10** — Duct Connection Size
- **CNM-HV-F1** — Silencer Model
- **72** — Silencer Length

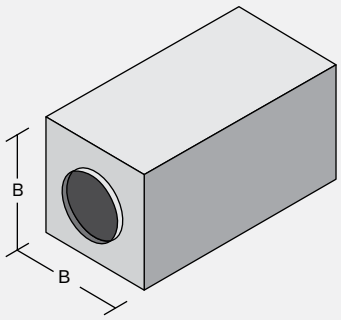

Insertion Loss (IL)

+ : "forward flow" where noise & airflow move in same direction (e.g. supply side)

- : "reverse flow" where noise & airflow move in opposite directions (e.g. return side)

See Silencer Selection Instructions. DIL above 50dB may be limited due to noise flanking around the silencer or along the duct walls. If more than 50dB DIL is required, contact your local Vibro-Acoustics Representative or call **1-800-565-8401**.

Length (in.)	Face Velocity (ft. per min)	Octave Band - Hz/Dynamic Insertion Loss (dB)							
		63	125	250	500	1000	2000	4000	8000
36	- 1500	12	14	31	11	8	11	10	9
	0	10	11	26	8	7	12	12	11
	+ 1500	12	13	29	10	9	13	13	12
48	- 1500	14	15	33	12	9	14	13	10
	0	11	12	29	9	9	15	14	12
	+ 1500	14	15	32	12	11	17	15	14
60	- 1500	15	17	36	14	11	17	16	12
	0	12	13	31	11	10	19	17	14
	+ 1500	15	17	35	14	12	20	18	16
72	- 1500	16	18	38	15	12	21	19	14
	0	13	14	33	12	11	22	19	16
	+ 1500	16	19	38	16	14	23	21	17

Pressure Drop (PD)

Pressure drops are reported in accordance with ASTM E477 methods and are based upon **ideal** flow conditions (5 diameters of straight duct on silencer inlet and 10 on outlet). Less than ideal conditions will result in an increase in pressure drop due to System Effects. See Silencer System Effects Data.

Duct Connect. Size (in.)	B x B (in.)	Silencer Length (in.)	Weight (lbs)	Face Velocity (ft. per min) / Pressure Drop (in.w.g.)						
				750	1000	1250	1500	1750	2000	2500
10	**30x30**	36	110	0.04	0.07	0.10	0.15	0.20	0.27	0.34
		48	143	0.04	0.07	0.11	0.16	0.22	0.28	0.36
		60	178	0.04	0.08	0.12	0.17	0.23	0.30	0.38
		72	212	0.05	0.08	0.13	0.18	0.25	0.32	0.41

☐ Acceptable (0 - 0.35") ☐ Caution (>0.35") Pressure Drop may be too high for certain applications

Generated Noise (GN)

@ 0.35 sq.ft. face area

Length (in.)	Face Velocity (ft. per min)	Octave Band - Hz/Generated Noise (dB re 10^{-12} watts)							
		63	125	250	500	1000	2000	4000	8000
All	- 2000	58	58	56	54	54	58	61	57
	- 1250	55	50	47	46	48	50	48	36
	+ 1250	55	53	43	40	41	42	36	29
	+ 2000	57	59	57	52	49	54	53	47

CERTIFIED PERFORMANCE DATA

VIBRO-ACOUSTICS®
A Swegon Group company

10 CNM-HV-F2

Circular No-Media
High velocity silencer
(<2000 fpm)

How to Specify Example:

10 X **CNM-HV-F2** X **72**

- **10** — Duct Connection Size
- **CNM-HV-F2** — Silencer Model
- **72** — Silencer Length

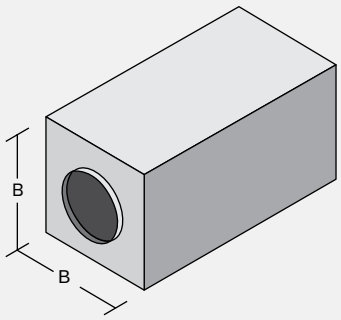

Insertion Loss (IL)

+ : "forward flow" where noise & airflow move in same direction (e.g. supply side)

- : "reverse flow" where noise & airflow move in opposite directions (e.g. return side)

See Silencer Selection Instructions. DIL above 50dB may be limited due to noise flanking around the silencer or along the duct walls. If more than 50dB DIL is required, contact your local Vibro-Acoustics Representative or call **1-800-565-8401**.

Length (in.)	Face Velocity (ft. per min)	Octave Band - Hz/Dynamic Insertion Loss (dB)							
		63	125	250	500	1000	2000	4000	8000
36	- 1500	9	11	16	22	11	12	11	10
	0	7	8	12	19	10	12	12	12
	+ 1500	9	10	16	24	13	15	15	15
48	- 1500	11	12	18	25	13	14	13	12
	0	8	9	14	22	11	14	14	14
	+ 1500	9	11	18	27	15	17	17	16
60	- 1500	12	13	21	29	15	16	16	13
	0	9	10	16	24	13	16	16	15
	+ 1500	10	13	21	31	17	18	19	18
72	- 1500	13	14	24	32	17	18	18	15
	0	10	11	18	27	15	18	18	17
	+ 1500	11	14	23	34	19	20	21	19

Pressure Drop (PD)

Pressure drops are reported in accordance with ASTM E477 methods and are based upon **ideal** flow conditions (5 diameters of straight duct on silencer inlet and 10 on outlet). Less than ideal conditions will result in an increase in pressure drop due to System Effects. See Silencer System Effects Data.

Duct Connect. Size (in.)	B x B (in.)	Silencer Length (in.)	Weight (lbs)	Face Velocity (ft. per min) / Pressure Drop (in.w.g.)						
				750	1000	1250	1500	1750	2000	2500
10	**20x20**	36	73	0.05	0.09	0.13	0.19	0.26	0.34	0.43
		48	96	0.05	0.09	0.14	0.20	0.27	0.35	0.45
		60	119	0.05	0.09	0.14	0.21	0.28	0.37	0.46
		72	142	0.05	0.10	0.15	0.21	0.29	0.38	0.48

☐ Acceptable (0 - 0.35") ☐ Caution (>0.35") Pressure Drop may be too high for certain applications

Generated Noise (GN)

@ 0.55 sq.ft. face area

Length (in.)	Face Velocity (ft. per min)	Octave Band - Hz/Generated Noise (dB re 10^{-12} watts)							
		63	125	250	500	1000	2000	4000	8000
All	- 2000	58	57	55	53	54	58	60	55
	- 1250	55	50	46	45	47	49	46	34
	+ 1250	55	55	44	38	41	41	34	29
	+ 2000	57	59	57	51	49	54	53	47

CERTIFIED PERFORMANCE DATA

VIBRO-ACOUSTICS®
A Swegon Group company

12 CNM-HV-F1

Circular No-Media
High velocity silencer
(<2000 fpm)

How to Specify Example:

12 X **CNM-HV-F1** X **72**

- **12** — Duct Connection Size
- **CNM-HV-F1** — Silencer Model
- **72** — Silencer Length

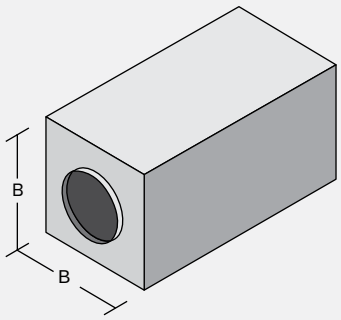

Insertion Loss (IL)

+ : "forward flow" where noise & airflow move in same direction (e.g. supply side)

- : "reverse flow" where noise & airflow move in opposite directions (e.g. return side)

See Silencer Selection Instructions. DIL above 50dB may be limited due to noise flanking around the silencer or along the duct walls. If more than 50dB DIL is required, contact your local Vibro-Acoustics Representative or call **1-800-565-8401**.

Length (in.)	Face Velocity (ft. per min)	Octave Band - Hz/Dynamic Insertion Loss (dB)							
		63	125	250	500	1000	2000	4000	8000
36	- 1500	10	11	24	11	8	11	11	9
	0	8	9	17	7	7	12	13	12
	+ 1500	10	11	22	11	9	14	14	14
48	- 1500	12	13	28	13	10	15	13	11
	0	9	10	21	10	9	16	15	14
	+ 1500	11	13	26	14	11	18	17	16
60	- 1500	13	14	32	15	12	20	16	13
	0	10	11	25	12	11	20	18	16
	+ 1500	13	14	31	16	14	22	19	18
72	- 1500	14	15	36	17	14	24	19	14
	0	11	12	28	14	13	25	20	19
	+ 1500	14	16	35	19	16	27	21	21

Pressure Drop (PD)

Pressure drops are reported in accordance with ASTM E477 methods and are based upon **ideal** flow conditions (5 diameters of straight duct on silencer inlet and 10 on outlet). Less than ideal conditions will result in an increase in pressure drop due to System Effects. See Silencer System Effects Data.

Duct Connect. Size (in.)	B x B (in.)	Silencer Length (in.)	Weight (lbs)	Face Velocity (ft. per min) / Pressure Drop (in.w.g.)						
				750	1000	1250	1500	1750	2000	2500
12	**30x30**	36	114	0.04	0.07	0.11	0.16	0.22	0.28	0.36
		48	149	0.04	0.07	0.11	0.16	0.22	0.29	0.37
		60	184	0.04	0.07	0.12	0.17	0.23	0.30	0.38
		72	219	0.04	0.08	0.12	0.17	0.23	0.30	0.38

☐ Acceptable (0 - 0.35") ☐ Caution (>0.35") Pressure Drop may be too high for certain applications

Generated Noise (GN)

@ 0.79 sq.ft. face area

Length (in.)	Face Velocity (ft. per min)	Octave Band - Hz/Generated Noise (dB re 10^{-12} watts)							
		63	125	250	500	1000	2000	4000	8000
All	- 2000	58	61	59	56	56	61	65	63
	- 1250	56	54	50	48	49	52	51	42
	+ 1250	52	51	38	37	38	37	27	27
	+ 2000	55	59	57	52	50	55	53	49

CERTIFIED PERFORMANCE DATA

VIBRO-ACOUSTICS®
A Swegon Group company

12 CNM-HV-F2

Circular No-Media
High velocity silencer
(<2000 fpm)

How to Specify Example:

12 X **CNM-HV-F2** X **72**

- 12 — Duct Connection Size
- CNM-HV-F2 — Silencer Model
- 72 — Silencer Length

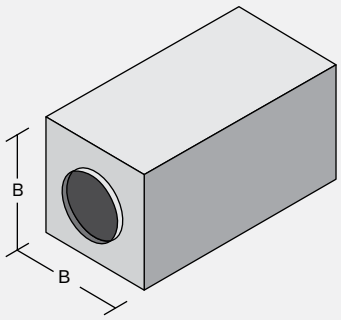

Insertion Loss (IL)

+ : "forward flow" where noise & airflow move in same direction (e.g. supply side)

- : "reverse flow" where noise & airflow move in opposite directions (e.g. return side)

See Silencer Selection Instructions. DIL above 50dB may be limited due to noise flanking around the silencer or along the duct walls. If more than 50dB DIL is required, contact your local Vibro-Acoustics Representative or call **1-800-565-8401**.

Length (in.)	Face Velocity (ft. per min)	Octave Band - Hz/Dynamic Insertion Loss (dB)							
		63	125	250	500	1000	2000	4000	8000
36	- 1500	7	8	13	21	11	11	11	9
	0	6	6	10	19	9	11	12	11
	+ 1500	7	8	13	21	13	13	14	14
48	- 1500	8	9	14	25	13	14	13	11
	0	6	7	11	23	12	14	15	13
	+ 1500	8	9	14	26	15	16	16	15
60	- 1500	9	10	15	30	16	17	16	12
	0	7	8	11	26	14	17	17	15
	+ 1500	9	10	15	31	17	19	19	17
72	- 1500	10	11	17	35	19	20	18	14
	0	8	9	12	30	16	20	19	18
	+ 1500	9	10	16	36	19	21	21	18

Pressure Drop (PD)

Pressure drops are reported in accordance with ASTM E477 methods and are based upon **ideal** flow conditions (5 diameters of straight duct on silencer inlet and 10 on outlet). Less than ideal conditions will result in an increase in pressure drop due to System Effects. See Silencer System Effects Data.

Duct Connect. Size (in.)	B x B (in.)	Silencer Length (in.)	Weight (lbs)	Face Velocity (ft. per min) / Pressure Drop (in.w.g.)						
				750	1000	1250	1500	1750	2000	2500
12	**20x20**	36	76	0.04	0.07	0.11	0.16	0.21	0.28	0.35
		48	101	0.04	0.07	0.11	0.17	0.22	0.29	0.37
		60	125	0.04	0.08	0.12	0.17	0.23	0.31	0.39
		72	150	0.05	0.08	0.13	0.18	0.25	0.32	0.41

☐ Acceptable (0 - 0.35") ☐ Caution (>0.35") Pressure Drop may be too high for certain applications

Generated Noise (GN)

@ 0.79 sq.ft. face area

Length (in.)	Face Velocity (ft. per min)	Octave Band - Hz/Generated Noise (dB re 10^{-12} watts)							
		63	125	250	500	1000	2000	4000	8000
All	-2000	58	60	57	54	55	60	63	60
	-1250	55	53	48	46	48	50	47	38
	+1250	52	55	47	38	47	41	31	31
	+2000	56	60	57	50	49	55	53	49

14 CNM-HV-F1

Circular No-Media
High velocity silencer
(<2000 fpm)

How to Specify Example:

14 X **CNM-HV-F1** X **72**

- **14** — Duct Connection Size
- **CNM-HV-F1** — Silencer Model
- **72** — Silencer Length

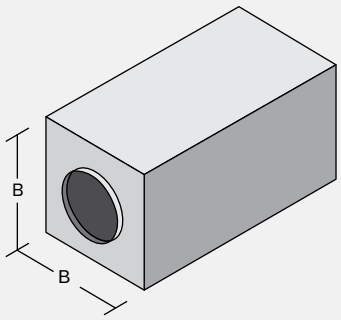

Insertion Loss (IL)

+ : "forward flow" where noise & airflow move in same direction (e.g. supply side)

- : "reverse flow" where noise & airflow move in opposite directions (e.g. return side)

See Silencer Selection Instructions. DIL above 50dB may be limited due to noise flanking around the silencer or along the duct walls. If more than 50dB DIL is required, contact your local Vibro-Acoustics Representative or call **1-800-565-8401**.

Length (in.)	Face Velocity (ft. per min)	Octave Band - Hz/Dynamic Insertion Loss (dB)							
		63	125	250	500	1000	2000	4000	8000
36	- 1500	9	10	24	9	8	9	8	6
	0	8	8	19	7	8	10	9	8
	+ 1500	8	9	22	9	9	11	10	9
48	- 1500	10	12	28	10	10	12	10	8
	0	9	10	22	8	10	13	12	11
	+ 1500	10	11	27	11	11	14	12	11
60	- 1500	12	13	31	12	12	16	12	10
	0	10	11	25	10	12	17	14	13
	+ 1500	12	13	31	13	14	18	15	14
72	- 1500	13	14	35	14	14	19	15	12
	0	11	12	28	11	15	20	17	15
	+ 1500	14	15	35	15	16	21	17	16

Pressure Drop (PD)

Pressure drops are reported in accordance with ASTM E477 methods and are based upon **ideal** flow conditions (5 diameters of straight duct on silencer inlet and 10 on outlet). Less than ideal conditions will result in an increase in pressure drop due to System Effects. See Silencer System Effects Data.

Duct Connect. Size (in.)	B x B (in.)	Silencer Length (in.)	Weight (lbs)	Face Velocity (ft. per min) / Pressure Drop (in.w.g.)						
				750	1000	1250	1500	1750	2000	2500
14	**36x36**	36	145	0.03	0.05	0.08	0.12	0.16	0.21	0.27
		48	189	0.03	0.06	0.09	0.13	0.18	0.23	0.29
		60	233	0.04	0.06	0.10	0.14	0.19	0.25	0.32
		72	278	0.04	0.07	0.11	0.16	0.21	0.28	0.35

☐ Acceptable (0 - 0.35") ☐ Caution (>0.35") Pressure Drop may be too high for certain applications

Generated Noise (GN)

@ 1.07 sq.ft. face area

Length (in.)	Face Velocity (ft. per min)	Octave Band - Hz/Generated Noise (dB re 10^{-12} watts)							
		63	125	250	500	1000	2000	4000	8000
All	-2000	60	63	64	59	61	66	73	67
	-1250	57	56	55	51	54	58	60	46
	+1250	57	59	51	45	48	50	48	39
	+2000	59	65	65	57	56	62	65	57

CERTIFIED PERFORMANCE DATA

VIBRO-ACOUSTICS®
A Swegon Group company

14 CNM-HV-F2

Circular No-Media
High velocity silencer
(<2000 fpm)

How to Specify Example:

14 X **CNM-HV-F2** X **72**

- **14**: Duct Connection Size
- **CNM-HV-F2**: Silencer Model
- **72**: Silencer Length

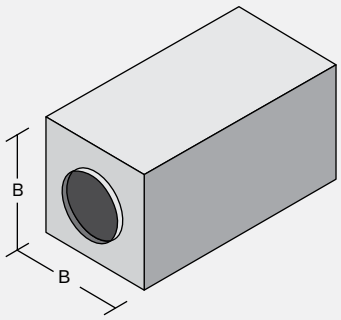

Insertion Loss (IL)

+ : "forward flow" where noise & airflow move in same direction (e.g. supply side)

- : "reverse flow" where noise & airflow move in opposite directions (e.g. return side)

See Silencer Selection Instructions. DIL above 50dB may be limited due to noise flanking around the silencer or along the duct walls. If more than 50dB DIL is required, contact your local Vibro-Acoustics Representative or call **1-800-565-8401**.

Length (in.)	Face Velocity (ft. per min)	Octave Band - Hz/Dynamic Insertion Loss (dB)							
		63	125	250	500	1000	2000	4000	8000
36	- 1500	8	10	14	22	13	11	9	7
	0	5	6	11	18	10	10	10	8
	+ 1500	8	9	14	22	15	14	12	11
48	- 1500	9	10	15	26	14	13	10	7
	0	6	7	12	20	12	12	12	10
	+ 1500	9	10	15	25	16	15	13	12
60	- 1500	10	11	16	29	16	14	11	8
	0	7	8	13	23	13	14	13	11
	+ 1500	10	11	17	28	17	17	15	13
72	- 1500	11	12	18	33	17	16	12	9
	0	8	8	14	26	15	15	15	12
	+ 1500	10	12	18	31	19	18	16	14

Pressure Drop (PD)

Pressure drops are reported in accordance with ASTM E477 methods and are based upon **ideal** flow conditions (5 diameters of straight duct on silencer inlet and 10 on outlet). Less than ideal conditions will result in an increase in pressure drop due to System Effects. See Silencer System Effects Data.

Duct Connect. Size (in.)	B x B (in.)	Silencer Length (in.)	Weight (lbs)	Face Velocity (ft. per min) / Pressure Drop (in.w.g.)						
				750	1000	1250	1500	1750	2000	2500
14	**24x24**	36	95	0.03	0.05	0.08	0.11	0.15	0.20	0.25
		48	125	0.03	0.05	0.08	0.12	0.16	0.21	0.27
		60	155	0.03	0.06	0.09	0.13	0.17	0.23	0.29
		72	185	0.03	0.06	0.09	0.14	0.18	0.24	0.30

☐ Acceptable (0 - 0.35") ☐ Caution (>0.35") Pressure Drop may be too high for certain applications

Generated Noise (GN)

@ 1.07 sq.ft. face area

Length (in.)	Face Velocity (ft. per min)	Octave Band - Hz/Generated Noise (dB re 10^{-12} watts)							
		63	125	250	500	1000	2000	4000	8000
All	-2000	60	63	63	58	60	66	72	65
	-1250	57	56	54	50	54	57	58	44
	+1250	57	60	52	43	47	49	46	39
	+2000	59	65	65	56	56	62	65	57

16 CNM-HV-F1

Circular No-Media
High velocity silencer
(<2000 fpm)

How to Specify Example:

16 X **CNM-HV-F1** X **72**

- **16** — Duct Connection Size
- **CNM-HV-F1** — Silencer Model
- **72** — Silencer Length

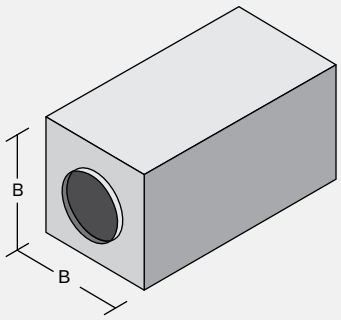

Insertion Loss (IL)

+ : "forward flow" where noise & airflow move in same direction (e.g. supply side)

- : "reverse flow" where noise & airflow move in opposite directions (e.g. return side)

See Silencer Selection Instructions. DIL above 50dB may be limited due to noise flanking around the silencer or along the duct walls. If more than 50dB DIL is required, contact your local Vibro-Acoustics Representative or call **1-800-565-8401**.

Length (in.)	Face Velocity (ft. per min)	Octave Band - Hz/Dynamic Insertion Loss (dB)							
		63	125	250	500	1000	2000	4000	8000
36	- 1500	7	9	24	6	1	7	4	3
	0	6	8	21	6	9	8	6	5
	+ 1500	6	8	23	6	8	8	6	5
48	- 1500	9	10	27	7	10	9	6	5
	0	8	9	23	7	11	11	8	7
	+ 1500	8	10	27	8	11	11	8	7
60	- 1500	11	12	31	9	12	11	8	7
	0	10	11	25	8	14	13	11	9
	+ 1500	10	12	31	9	14	13	11	9
72	- 1500	12	13	34	10	15	14	10	10
	0	11	12	27	9	17	15	13	10
	+ 1500	12	14	35	11	17	16	13	11

Pressure Drop (PD)

Pressure drops are reported in accordance with ASTM E477 methods and are based upon **ideal** flow conditions (5 diameters of straight duct on silencer inlet and 10 on outlet). Less than ideal conditions will result in an increase in pressure drop due to System Effects. See Silencer System Effects Data.

Duct Connect. Size (in.)	B x B (in.)	Silencer Length (in.)	Weight (lbs)	Face Velocity (ft. per min) / Pressure Drop (in.w.g.)						
				750	1000	1250	1500	1750	2000	2500
16	**36x36**	36	151	0.02	0.03	0.05	0.08	0.10	0.13	0.17
		48	197	0.02	0.04	0.07	0.10	0.13	0.17	0.22
		60	242	0.03	0.05	0.08	0.12	0.16	0.21	0.27
		72	288	0.04	0.06	0.10	0.14	0.19	0.25	0.32

☐ Acceptable (0 - 0.35") ☐ Caution (>0.35") Pressure Drop may be too high for certain applications

Generated Noise (GN)

@ 1.40 sq.ft. face area

Length (in.)	Face Velocity (ft. per min)	Octave Band - Hz/Generated Noise (dB re 10^{-12} watts)							
		63	125	250	500	1000	2000	4000	8000
All	-2000	63	67	73	64	70	71	70	63
	-1250	61	61	65	57	60	62	61	53
	+1250	68	73	63	54	58	59	57	48
	+2000	66	75	75	66	68	71	67	59

16 CNM-HV-F2

Circular No-Media
High velocity silencer
(<2000 fpm)

How to Specify Example:

16 X **CNM-HV-F2** X **72**

- **16** — Duct Connection Size
- **CNM-HV-F2** — Silencer Model
- **72** — Silencer Length

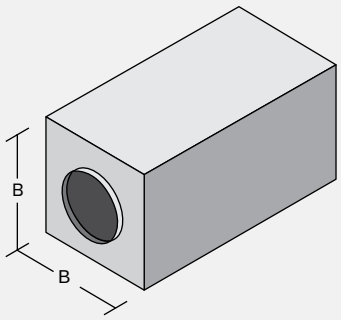

Insertion Loss (IL)

+ : "forward flow" where noise & airflow move in same direction (e.g. supply side)

- : "reverse flow" where noise & airflow move in opposite directions (e.g. return side)

See Silencer Selection Instructions. DIL above 50dB may be limited due to noise flanking around the silencer or along the duct walls. If more than 50dB DIL is required, contact your local Vibro-Acoustics Representative or call **1-800-565-8401**.

Length (in.)	Face Velocity (ft. per min)	16Octave Band - Hz/Dynamic Insertion Loss (dB)							
		63	125	250	500	1000	2000	4000	8000
36	- 1500	5	11	16	23	15	12	7	4
	0	3	6	11	16	12	10	8	6
	+ 1500	5	11	16	24	17	14	10	9
48	- 1500	6	12	17	26	15	12	7	4
	0	4	7	13	18	12	10	9	6
	+ 1500	6	11	17	25	17	14	10	9
60	- 1500	7	13	18	29	16	12	7	4
	0	4	7	14	20	12	11	9	7
	+ 1500	7	12	18	26	18	14	11	10
72	- 1500	9	14	19	31	16	12	7	4
	0	4	8	16	22	13	11	10	7
	+ 1500	8	13	20	27	18	15	11	10

Pressure Drop (PD)

Pressure drops are reported in accordance with ASTM E477 methods and are based upon **ideal** flow conditions (5 diameters of straight duct on silencer inlet and 10 on outlet). Less than ideal conditions will result in an increase in pressure drop due to System Effects. See Silencer System Effects Data.

Duct Connect. Size (in.)	B x B (in.)	Silencer Length (in.)	Weight (lbs)	Face Velocity (ft. per min) / Pressure Drop (in.w.g.)						
				750	1000	1250	1500	1750	2000	2500
16	**24x24**	36	101	0.02	0.03	0.05	0.07	0.09	0.12	0.15
		48	132	0.02	0.03	0.05	0.08	0.10	0.13	0.17
		60	164	0.02	0.04	0.06	0.08	0.11	0.15	0.19
		72	196	0.02	0.04	0.06	0.09	0.12	0.16	0.20

☐ Acceptable (0 - 0.35") ☐ Caution (>0.35") Pressure Drop may be too high for certain applications

Generated Noise (GN)

@ 1.40 sq.ft. face area

Length (in.)	Face Velocity (ft. per min)	Octave Band - Hz/Generated Noise (dB re 10^{-12} watts)							
		63	125	250	500	1000	2000	4000	8000
All	-2000	64	68	74	65	71	72	71	63
	-1250	61	61	66	57	60	62	62	51
	+1250	67	71	63	52	57	59	57	49
	+2000	66	74	75	64	69	71	69	59

CERTIFIED PERFORMANCE DATA

VIBRO-ACOUSTICS®
A Swegon Group company

8 CNM-UHV-F1

Circular No-Media
Ultra high velocity silencer
(<3500 fpm)

How to Specify Example:

8 X **CNM-UHV-F1** X **72**

- 8 — Duct Connection Size
- CNM-UHV-F1 — Silencer Model
- 72 — Silencer Length

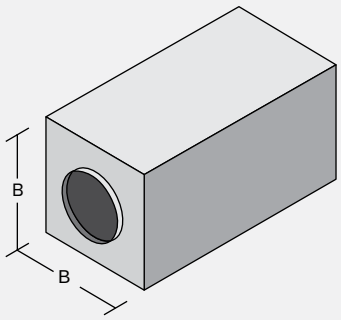

Insertion Loss (IL)

+ : "forward flow" where noise & airflow move in same direction (e.g. supply side)

- : "reverse flow" where noise & airflow move in opposite directions (e.g. return side)

See Silencer Selection Instructions. DIL above 50dB may be limited due to noise flanking around the silencer or along the duct walls. If more than 50dB DIL is required, contact your local Vibro-Acoustics Representative or call **1-800-565-8401**.

Length (in.)	Face Velocity (ft. per min)	Octave Band - Hz/Dynamic Insertion Loss (dB)							
		63	125	250	500	1000	2000	4000	8000
36	- 1500	14	15	40	9	6	7	6	6
	0	12	14	38	9	7	8	7	7
	+ 1500	13	15	38	10	8	8	7	7
48	- 1500	15	19	42	10	7	8	8	7
	0	14	16	41	10	8	9	8	8
	+ 1500	13	18	41	11	9	9	8	8
60	- 1500	14	22	45	11	8	9	9	8
	0	15	18	44	10	9	11	10	9
	+ 1500	13	21	44	12	10	10	10	9
72	- 1500	14	25	47	12	9	10	11	9
	0	15	21	47	11	10	12	12	10
	+ 1500	13	24	46	13	12	12	12	10

Pressure Drop (PD)

Pressure drops are reported in accordance with ASTM E477 methods and are based upon **ideal** flow conditions (5 diameters of straight duct on silencer inlet and 10 on outlet). Less than ideal conditions will result in an increase in pressure drop due to System Effects. See Silencer System Effects Data.

Duct Connect. Size (in.)	B x B (in.)	Silencer Length (in.)	Weight (lbs)	Face Velocity (ft. per min) / Pressure Drop (in.w.g.)						
				2000	2250	2500	2750	3000	3250	3500
8	**30x30**	36	95	0.08	0.10	0.12	0.15	0.17	0.20	0.24
		48	124	0.08	0.10	0.12	0.15	0.18	0.21	0.24
		60	153	0.08	0.10	0.13	0.15	0.18	0.21	0.25
		72	182	0.08	0.11	0.13	0.16	0.19	0.22	0.25

☐ Acceptable (0 - 0.35") ☐ Caution (>0.35") Pressure Drop may be too high for certain applications

Generated Noise (GN)

@ 0.35 sq.ft. face area

Length (in.)	Face Velocity (ft. per min)	Octave Band - Hz/Generated Noise (dB re 10^{-12} watts)							
		63	125	250	500	1000	2000	4000	8000
All	-3000	56	55	51	53	53	56	49	37
	-2000	54	50	44	45	43	38	33	33
	+2000	54	50	46	46	46	44	36	33
	+3000	58	57	51	52	52	54	48	43

CERTIFIED PERFORMANCE DATA

VIBRO-ACOUSTICS®
A Swegon Group company

8 CNM-UHV-F2

Circular No-Media
Ultra high velocity silencer
(<3500 fpm)

How to Specify Example:

8 X **CNM-UHV-F2** X **72**

- **8** — Duct Connection Size
- **CNM-UHV-F2** — Silencer Model
- **72** — Silencer Length

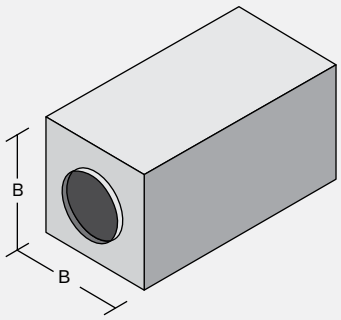

Insertion Loss (IL)

+ : "forward flow" where noise & airflow move in same direction (e.g. supply side)

- : "reverse flow" where noise & airflow move in opposite directions (e.g. return side)

See Silencer Selection Instructions. DIL above 50dB may be limited due to noise flanking around the silencer or along the duct walls. If more than 50dB DIL is required, contact your local Vibro-Acoustics Representative or call **1-800-565-8401**.

Length (in.)	Face Velocity (ft. per min)	Octave Band - Hz/Dynamic Insertion Loss (dB)							
		63	125	250	500	1000	2000	4000	8000
36	-2500	8	9	19	18	7	6	5	5
	0	9	10	18	18	8	7	6	6
	+2500	10	11	17	20	8	7	6	6
48	-2500	10	11	23	20	8	8	7	6
	0	10	11	21	19	9	8	8	7
	+2500	11	12	21	22	9	8	8	7
60	-2500	11	12	27	22	10	9	8	8
	0	11	13	23	21	10	9	9	9
	+2500	12	14	25	25	11	9	9	8
72	-2500	13	14	31	24	11	10	10	9
	0	13	14	26	22	11	10	11	10
	+2500	13	16	29	27	12	10	11	9

Pressure Drop (PD)

Pressure drops are reported in accordance with ASTM E477 methods and are based upon **ideal** flow conditions (5 diameters of straight duct on silencer inlet and 10 on outlet). Less than ideal conditions will result in an increase in pressure drop due to System Effects. See Silencer System Effects Data.

Duct Connect. Size (in.)	B x B (in.)	Silencer Length (in.)	Weight (lbs)	Face Velocity (ft. per min) / Pressure Drop (in.w.g.)						
				2000	2250	2500	2750	3000	3250	3500
8	**20x20**	36	57	0.08	0.10	0.13	0.15	0.18	0.21	0.25
		48	75	0.08	0.10	0.13	0.15	0.18	0.21	0.25
		60	94	0.08	0.10	0.13	0.15	0.18	0.21	0.25
		72	112	0.08	0.10	0.13	0.15	0.18	0.21	0.25

☐ Acceptable (0 - 0.35") ☐ Caution (>0.35") Pressure Drop may be too high for certain applications

Generated Noise (GN)

@ 0.35 sq.ft. face area

Length (in.)	Face Velocity (ft. per min)	Octave Band - Hz/Generated Noise (dB re 10^{-12} watts)							
		63	125	250	500	1000	2000	4000	8000
All	-3000	58	55	51	53	53	56	55	43
	-2000	54	50	44	43	43	38	33	33
	+2000	55	51	47	45	46	44	37	34
	+3000	58	59	52	51	50	54	47	42

CERTIFIED PERFORMANCE DATA

VIBRO-ACOUSTICS®
A Swegon Group company

10 CNM-UHV-F1

Circular No-Media
Ultra high velocity silencer
(<3500 fpm)

How to Specify Example:

10 X **CNM-UHV-F1** X **72**

- **10** — Duct Connection Size
- **CNM-UHV-F1** — Silencer Model
- **72** — Silencer Length

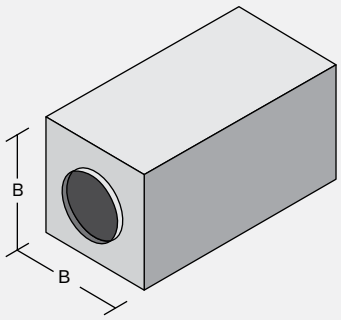

Insertion Loss (IL)

+ : "forward flow" where noise & airflow move in same direction (e.g. supply side)

- : "reverse flow" where noise & airflow move in opposite directions (e.g. return side)

See Silencer Selection Instructions. DIL above 50dB may be limited due to noise flanking around the silencer or along the duct walls. If more than 50dB DIL is required, contact your local Vibro-Acoustics Representative or call **1-800-565-8401**.

Length (in.)	Face Velocity (ft. per min)	Octave Band - Hz/Dynamic Insertion Loss (dB)							
		63	125	250	500	1000	2000	4000	8000
36	-2500	11	12	33	8	6	6	5	5
	0	10	11	30	8	6	7	6	6
	+2500	11	12	31	9	6	7	6	5
48	-2500	13	15	36	9	7	7	6	6
	0	12	13	33	9	8	8	7	7
	+2500	12	14	34	10	8	8	7	6
60	-2500	12	17	39	11	9	9	8	7
	0	13	15	37	11	9	10	9	8
	+2500	12	17	37	12	10	10	9	8
72	-2500	12	20	42	13	10	10	9	8
	0	13	16	40	12	11	11	10	9
	+2500	13	19	41	14	12	11	10	9

Pressure Drop (PD)

Pressure drops are reported in accordance with ASTM E477 methods and are based upon **ideal** flow conditions (5 diameters of straight duct on silencer inlet and 10 on outlet). Less than ideal conditions will result in an increase in pressure drop due to System Effects. See Silencer System Effects Data.

Duct Connect. Size (in.)	B x B (in.)	Silencer Length (in.)	Weight (lbs)	Face Velocity (ft. per min) / Pressure Drop (in.w.g.)						
				2000	2250	2500	2750	3000	3250	3500
10	**30x30**	36	96	0.10	0.12	0.15	0.19	0.22	0.26	0.30
		48	125	0.10	0.13	0.16	0.19	0.22	0.26	0.30
		60	156	0.10	0.13	0.16	0.19	0.23	0.27	0.31
		72	185	0.10	0.13	0.16	0.19	0.23	0.27	0.31

☐ Acceptable (0 - 0.35") ☐ Caution (>0.35") Pressure Drop may be too high for certain applications

Generated Noise (GN)

@ 0.55 sq.ft. face area

Length (in.)	Face Velocity (ft. per min)	Octave Band - Hz/Generated Noise (dB re 10^{-12} watts)							
		63	125	250	500	1000	2000	4000	8000
All	-3000	58	58	55	55	55	58	51	38
	-2000	56	52	47	47	45	40	35	34
	+2000	55	54	46	47	46	44	41	37
	+3000	60	61	51	53	52	54	53	47

CERTIFIED PERFORMANCE DATA

VIBRO-ACOUSTICS®
A Swegon Group company

10 CNM-UHV-F2

Circular No-Media
Ultra high velocity silencer
(<3500 fpm)

How to Specify Example:

10 X **CNM-UHV-F2** X **72**

- **10**: Duct Connection Size
- **CNM-UHV-F2**: Silencer Model
- **72**: Silencer Length

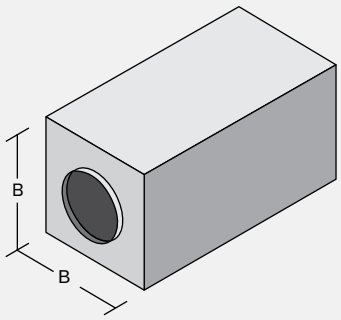

Insertion Loss (IL)

+ : "forward flow" where noise & airflow move in same direction (e.g. supply side)

- : "reverse flow" where noise & airflow move in opposite directions (e.g. return side)

See Silencer Selection Instructions. DIL above 50dB may be limited due to noise flanking around the silencer or along the duct walls. If more than 50dB DIL is required, contact your local Vibro-Acoustics Representative or call **1-800-565-8401**.

Length (in.)	Face Velocity (ft. per min)	Octave Band - Hz/Dynamic Insertion Loss (dB)							
		63	125	250	500	1000	2000	4000	8000
36	-2500	7	8	14	19	6	5	4	4
	0	7	8	13	21	7	6	5	5
	+2500	8	8	13	22	7	6	5	4
48	-2500	8	9	17	22	7	6	6	5
	0	8	9	15	23	8	7	6	6
	+2500	9	10	16	25	8	7	6	6
60	-2500	10	11	19	25	8	8	7	6
	0	10	11	17	25	9	8	8	7
	+2500	10	12	18	28	9	8	8	7
72	-2500	11	12	22	29	10	9	9	8
	0	11	12	19	28	10	9	9	8
	+2500	11	13	21	31	11	9	9	8

Pressure Drop (PD)

Pressure drops are reported in accordance with ASTM E477 methods and are based upon **ideal** flow conditions (5 diameters of straight duct on silencer inlet and 10 on outlet). Less than ideal conditions will result in an increase in pressure drop due to System Effects. See Silencer System Effects Data.

Duct Connect. Size (in.)	B x B (in.)	Silencer Length (in.)	Weight (lbs)	Face Velocity (ft. per min) / Pressure Drop (in.w.g.)						
				2000	2250	2500	2750	3000	3250	3500
10	**20x20**	36	59	0.08	0.10	0.13	0.15	0.18	0.21	0.25
		48	78	0.09	0.11	0.14	0.16	0.20	0.23	0.27
		60	97	0.09	0.12	0.15	0.18	0.21	0.25	0.29
		72	115	0.10	0.13	0.16	0.19	0.23	0.26	0.31

☐ Acceptable (0 - 0.35") ☐ Caution (>0.35") Pressure Drop may be too high for certain applications

Generated Noise (GN)

@ 0.55 sq.ft. face area

Length (in.)	Face Velocity (ft. per min)	Octave Band - Hz/Generated Noise (dB re 10^{-12} watts)							
		63	125	250	500	1000	2000	4000	8000
All	-3000	60	59	55	51	53	57	56	45
	-2000	55	53	47	41	43	39	34	35
	+2000	56	55	50	43	46	45	38	36
	+3000	60	62	56	49	50	55	48	44

CERTIFIED PERFORMANCE DATA

VIBRO-ACOUSTICS®
A Swegon Group company

12 CNM-UHV-F1

Circular No-Media
Ultra high velocity silencer
(<3500 fpm)

How to Specify Example:

12 X **CNM-UHV-F1** X **72**

- 12 — Duct Connection Size
- CNM-UHV-F1 — Silencer Model
- 72 — Silencer Length

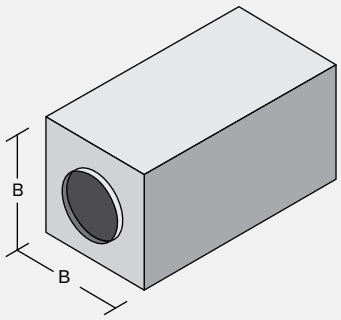

Insertion Loss (IL)

+ : "forward flow" where noise & airflow move in same direction (e.g. supply side)

- : "reverse flow" where noise & airflow move in opposite directions (e.g. return side)

See Silencer Selection Instructions. DIL above 50dB may be limited due to noise flanking around the silencer or along the duct walls. If more than 50dB DIL is required, contact your local Vibro-Acoustics Representative or call **1-800-565-8401**.

Length (in.)	Face Velocity (ft. per min)	Octave Band - Hz/Dynamic Insertion Loss (dB)							
		63	125	250	500	1000	2000	4000	8000
36	-2500	9	10	27	7	5	5	4	5
	0	8	9	22	7	6	6	5	5
	+2500	8	9	23	7	5	6	5	3
48	-2500	10	11	30	9	7	7	5	5
	0	9	10	26	9	8	7	6	6
	+2500	10	11	27	10	7	7	6	5
60	-2500	10	13	33	11	9	8	7	6
	0	10	11	29	11	10	9	7	7
	+2500	11	13	31	12	10	9	7	6
72	-2500	11	15	36	13	11	10	8	7
	0	11	12	32	12	12	10	8	7
	+2500	12	14	35	14	12	10	8	7

Pressure Drop (PD)

Pressure drops are reported in accordance with ASTM E477 methods and are based upon **ideal** flow conditions (5 diameters of straight duct on silencer inlet and 10 on outlet). Less than ideal conditions will result in an increase in pressure drop due to System Effects. See Silencer System Effects Data.

Duct Connect. Size (in.)	B x B (in.)	Silencer Length (in.)	Weight (lbs)	Face Velocity (ft. per min) / Pressure Drop (in.w.g.)						
				2000	2250	2500	2750	3000	3250	3500
12	**30x30**	36	98	0.12	0.15	0.19	0.23	0.27	0.32	0.37
		48	128	0.12	0.15	0.19	0.23	0.27	0.32	0.37
		60	158	0.12	0.15	0.19	0.23	0.27	0.32	0.37
		72	188	0.12	0.15	0.19	0.23	0.27	0.32	0.37

☐ Acceptable (0 - 0.35") ☐ Caution (>0.35") Pressure Drop may be too high for certain applications

Generated Noise (GN)

@ 0.79 sq.ft. face area

Length (in.)	Face Velocity (ft. per min)	Octave Band - Hz/Generated Noise (dB re 10^{-12} watts)							
		63	125	250	500	1000	2000	4000	8000
All	-3000	60	60	58	56	56	60	52	38
	-2000	58	55	50	48	46	42	36	34
	+2000	56	59	46	47	46	44	45	40
	+3000	61	66	51	53	52	54	57	50

CERTIFIED PERFORMANCE DATA

VIBRO-ACOUSTICS®
A Swegon Group company

12 CNM-UHV-F2

Circular No-Media
Ultra high velocity silencer
(<3500 fpm)

How to Specify Example:

12 X **CNM-UHV-F2** X **72**

- 12 — Duct Connection Size
- CNM-UHV-F2 — Silencer Model
- 72 — Silencer Length

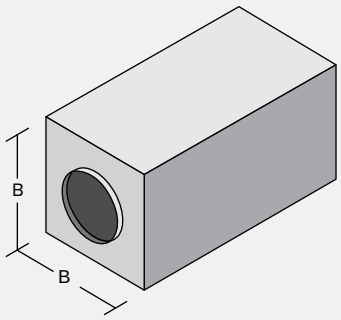

Insertion Loss (IL)

+ : "forward flow" where noise & airflow move in same direction (e.g. supply side)

- : "reverse flow" where noise & airflow move in opposite directions (e.g. return side)

See Silencer Selection Instructions. DIL above 50dB may be limited due to noise flanking around the silencer or along the duct walls. If more than 50dB DIL is required, contact your local Vibro-Acoustics Representative or call **1-800-565-8401**.

Length (in.)	Face Velocity (ft. per min)	Octave Band - Hz/Dynamic Insertion Loss (dB)							
		63	125	250	500	1000	2000	4000	8000
36	-2500	4	7	9	21	5	4	3	3
	0	4	6	8	23	6	4	4	4
	+2500	5	6	9	24	6	4	4	3
48	-2500	5	8	10	25	6	5	5	4
	0	6	7	9	27	7	5	5	4
	+2500	6	8	10	28	7	6	5	4
60	-2500	7	9	12	29	7	6	6	5
	0	7	8	10	30	8	7	6	5
	+2500	8	9	12	32	8	7	7	5
72	-2500	8	11	13	33	8	8	8	7
	0	8	10	11	34	9	8	7	6
	+2500	9	10	13	36	10	8	8	7

Pressure Drop (PD)

Pressure drops are reported in accordance with ASTM E477 methods and are based upon **ideal** flow conditions (5 diameters of straight duct on silencer inlet and 10 on outlet). Less than ideal conditions will result in an increase in pressure drop due to System Effects. See Silencer System Effects Data.

Duct Connect. Size (in.)	B x B (in.)	Silencer Length (in.)	Weight (lbs)	Face Velocity (ft. per min) / Pressure Drop (in.w.g.)						
				2000	2250	2500	2750	3000	3250	3500
12	**20x20**	36	60	0.08	0.10	0.13	0.15	0.18	0.21	0.25
		48	80	0.09	0.12	0.15	0.18	0.21	0.25	0.29
		60	99	0.11	0.14	0.17	0.20	0.24	0.28	0.33
		72	119	0.12	0.15	0.19	0.23	0.27	0.32	0.37

☐ Acceptable (0 - 0.35") ☐ Caution (>0.35") Pressure Drop may be too high for certain applications

Generated Noise (GN)

@ 0.79 sq.ft. face area

Length (in.)	Face Velocity (ft. per min)	Octave Band - Hz/Generated Noise (dB re 10^{-12} watts)							
		63	125	250	500	1000	2000	4000	8000
All	-3000	61	62	58	49	53	57	57	46
	-2000	56	57	50	39	43	39	35	36
	+2000	58	59	53	41	46	45	39	37
	+3000	61	66	59	47	50	55	49	45

14 CNM-UHV-F1

Circular No-Media
Ultra high velocity silencer
(<3500 fpm)

How to Specify Example:

14 X **CNM-UHV-F1** X **72**

- **14**: Duct Connection Size
- **CNM-UHV-F1**: Silencer Model
- **72**: Silencer Length

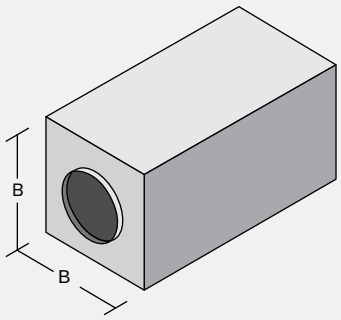

Insertion Loss (IL)

+ : "forward flow" where noise & airflow move in same direction (e.g. supply side)

- : "reverse flow" where noise & airflow move in opposite directions (e.g. return side)

See Silencer Selection Instructions. DIL above 50dB may be limited due to noise flanking around the silencer or along the duct walls. If more than 50dB DIL is required, contact your local Vibro-Acoustics Representative or call **1-800-565-8401**.

Length (in.)	Face Velocity (ft. per min)	Octave Band - Hz/Dynamic Insertion Loss (dB)							
		63	125	250	500	1000	2000	4000	8000
36	-2500	9	9	26	6	5	4	3	4
	0	8	8	21	6	6	5	5	5
	+2500	8	9	24	7	6	5	4	4
48	-2500	10	11	28	7	7	6	4	5
	0	9	10	24	7	8	7	6	6
	+2500	9	10	27	8	7	6	5	5
60	-2500	11	12	31	9	8	7	5	5
	0	10	11	27	8	9	8	7	6
	+2500	10	12	30	9	8	8	6	6
72	-2500	12	14	34	10	9	8	6	6
	0	10	12	29	9	10	9	8	7
	+2500	11	14	33	10	10	9	7	7

Pressure Drop (PD)

Pressure drops are reported in accordance with ASTM E477 methods and are based upon **ideal** flow conditions (5 diameters of straight duct on silencer inlet and 10 on outlet). Less than ideal conditions will result in an increase in pressure drop due to System Effects. See Silencer System Effects Data.

Duct Connect. Size (in.)	B x B (in.)	Silencer Length (in.)	Weight (lbs)	Face Velocity (ft. per min) / Pressure Drop (in.w.g.)						
				2000	2250	2500	2750	3000	3250	3500
14	**36x36**	36	126	0.07	0.08	0.10	0.13	0.15	0.18	0.20
		48	164	0.07	0.08	0.10	0.13	0.15	0.18	0.20
		60	202	0.07	0.08	0.10	0.13	0.15	0.18	0.20
		72	241	0.07	0.08	0.10	0.13	0.15	0.18	0.20

☐ Acceptable (0 - 0.35") ☐ Caution (>0.35") Pressure Drop may be too high for certain applications

Generated Noise (GN)

@ 1.07 sq.ft. face area

Length (in.)	Face Velocity (ft. per min)	Octave Band - Hz/Generated Noise (dB re 10^{-12} watts)							
		63	125	250	500	1000	2000	4000	8000
All	-3000	61	66	57	63	63	68	62	46
	-2000	59	60	50	55	53	50	46	42
	+2000	59	63	46	55	52	50	49	45
	+3000	64	70	52	61	58	60	61	55

CERTIFIED PERFORMANCE DATA

VIBRO-ACOUSTICS®
A Swegon Group company

14 CNM-UHV-F2

Circular No-Media
Ultra high velocity silencer
(<3500 fpm)

How to Specify Example:

14 X **CNM-UHV-F2** X **72**

- **14**: Duct Connection Size
- **CNM-UHV-F2**: Silencer Model
- **72**: Silencer Length

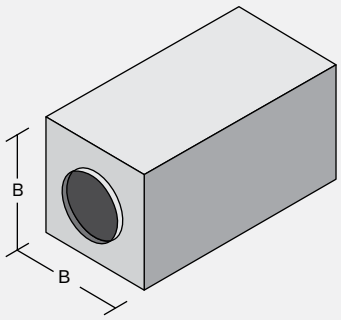

Insertion Loss (IL)

+ : "forward flow" where noise & airflow move in same direction (e.g. supply side)

- : "reverse flow" where noise & airflow move in opposite directions (e.g. return side)

See Silencer Selection Instructions. DIL above 50dB may be limited due to noise flanking around the silencer or along the duct walls. If more than 50dB DIL is required, contact your local Vibro-Acoustics Representative or call **1-800-565-8401**.

Length (in.)	Face Velocity (ft. per min)	Octave Band - Hz/Dynamic Insertion Loss (dB)							
		63	125	250	500	1000	2000	4000	8000
36	-2500	5	6	9	19	5	4	3	3
	0	4	5	8	18	6	4	4	4
	+2500	5	5	8	20	6	5	4	4
48	-2500	6	7	10	22	6	5	4	4
	0	5	6	9	21	7	5	5	5
	+2500	6	6	10	22	7	6	5	5
60	-2500	7	8	12	26	7	6	5	5
	0	6	7	10	23	8	7	6	6
	+2500	6	7	11	25	8	6	6	6
72	-2500	8	9	13	29	8	7	5	5
	0	7	8	12	26	9	8	7	7
	+2500	7	8	12	27	9	7	7	7

Pressure Drop (PD)

Pressure drops are reported in accordance with ASTM E477 methods and are based upon **ideal** flow conditions (5 diameters of straight duct on silencer inlet and 10 on outlet). Less than ideal conditions will result in an increase in pressure drop due to System Effects. See Silencer System Effects Data.

Duct Connect. Size (in.)	B x B (in.)	Silencer Length (in.)	Weight (lbs)	Face Velocity (ft. per min) / Pressure Drop (in.w.g.)						
				2000	2250	2500	2750	3000	3250	3500
14	**24x24**	36	76	0.05	0.07	0.08	0.10	0.12	0.14	0.16
		48	100	0.06	0.07	0.09	0.11	0.13	0.15	0.18
		60	124	0.06	0.08	0.10	0.12	0.14	0.16	0.19
		72	148	0.07	0.08	0.10	0.13	0.15	0.18	0.20

☐ Acceptable (0 - 0.35") ☐ Caution (>0.35") Pressure Drop may be too high for certain applications

Generated Noise (GN)

@ 1.07 sq.ft. face area

Length (in.)	Face Velocity (ft. per min)	Octave Band - Hz/Generated Noise (dB re 10^{-12} watts)							
		63	125	250	500	1000	2000	4000	8000
All	-3000	61	66	57	60	62	66	64	50
	-2000	58	61	50	51	52	48	45	43
	+2000	60	63	50	52	52	51	46	44
	+3000	64	70	56	58	57	61	57	53

16 CNM-UHV-F1

Circular No-Media
Ultra high velocity silencer
(<3500 fpm)

How to Specify Example:

16 X **CNM-UHV-F1** X **72**

- 16 — Duct Connection Size
- CNM-UHV-F1 — Silencer Model
- 72 — Silencer Length

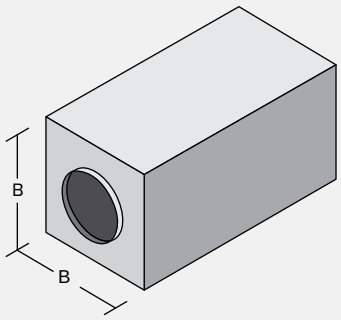

Insertion Loss (IL)

+ : "forward flow" where noise & airflow move in same direction (e.g. supply side)

- : "reverse flow" where noise & airflow move in opposite directions (e.g. return side)

See Silencer Selection Instructions. DIL above 50dB may be limited due to noise flanking around the silencer or along the duct walls. If more than 50dB DIL is required, contact your local Vibro-Acoustics Representative or call **1-800-565-8401**.

Length (in.)	Face Velocity (ft. per min)	Octave Band - Hz/Dynamic Insertion Loss (dB)							
		63	125	250	500	1000	2000	4000	8000
36	-2500	8	9	25	5	6	4	2	3
	0	7	8	21	6	7	5	4	4
	+2500	7	8	24	6	7	5	4	5
48	-2500	9	11	27	6	6	4	3	4
	0	8	9	23	6	8	6	5	5
	+2500	8	10	26	6	7	6	5	5
60	-2500	11	12	29	6	7	5	3	4
	0	8	11	25	6	8	7	6	6
	+2500	9	11	29	6	7	6	5	6
72	-2500	12	13	31	7	8	6	4	4
	0	9	12	27	6	8	8	7	7
	+2500	10	13	31	5	7	7	6	7

Pressure Drop (PD)

Pressure drops are reported in accordance with ASTM E477 methods and are based upon **ideal** flow conditions (5 diameters of straight duct on silencer inlet and 10 on outlet). Less than ideal conditions will result in an increase in pressure drop due to System Effects. See Silencer System Effects Data.

Duct Connect. Size (in.)	B x B (in.)	Silencer Length (in.)	Weight (lbs)	Face Velocity (ft. per min) / Pressure Drop (in.w.g.)						
				2000	2250	2500	2750	3000	3250	3500
16	**36x36**	36	128	0.01	0.02	0.02	0.03	0.03	0.04	0.04
		48	167	0.01	0.02	0.02	0.03	0.03	0.04	0.04
		60	205	0.01	0.02	0.02	0.03	0.03	0.04	0.04
		72	244	0.01	0.02	0.02	0.03	0.03	0.04	0.04

☐ Acceptable (0 - 0.35") ☐ Caution (>0.35") Pressure Drop may be too high for certain applications

Generated Noise (GN)

@ 1.40 sq.ft. face area

Length (in.)	Face Velocity (ft. per min)	Octave Band - Hz/Generated Noise (dB re 10^{-12} watts)							
		63	125	250	500	1000	2000	4000	8000
All	-3000	62	76	56	77	77	79	79	61
	-2000	61	71	48	69	67	65	65	57
	+2000	64	71	48	70	64	63	56	56
	+3000	69	78	54	76	70	73	68	66

16 CNM-UHV-F2

Circular No-Media
Ultra high velocity silencer
(<3500 fpm)

How to Specify Example:

16 X **CNM-UHV-F2** X **72**

- 16 — Duct Connection Size
- CNM-UHV-F2 — Silencer Model
- 72 — Silencer Length

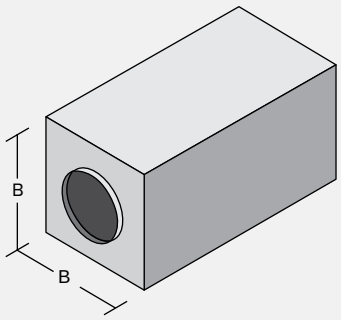

Insertion Loss (IL)

+ : "forward flow" where noise & airflow move in same direction (e.g. supply side)

- : "reverse flow" where noise & airflow move in opposite directions (e.g. return side)

See Silencer Selection Instructions. DIL above 50dB may be limited due to noise flanking around the silencer or along the duct walls. If more than 50dB DIL is required, contact your local Vibro-Acoustics Representative or call **1-800-565-8401**.

Length (in.)	Face Velocity (ft. per min)	16Octave Band - Hz/Dynamic Insertion Loss (dB)							
		63	125	250	500	1000	2000	4000	8000
36	-2500	4	5	10	17	6	3	3	4
	0	3	4	8	12	6	4	4	5
	+2500	4	4	8	15	6	5	4	5
48	-2500	5	5	11	19	6	4	3	4
	0	4	4	9	15	7	5	5	6
	+2500	4	5	9	16	6	6	5	5
60	-2500	6	6	11	22	7	5	3	4
	0	5	5	11	17	8	6	7	7
	+2500	5	5	10	17	7	6	5	6
72	-2500	6	7	12	25	8	5	3	4
	0	5	6	12	19	9	8	8	7
	+2500	5	6	11	19	8	7	6	6

Pressure Drop (PD)

Pressure drops are reported in accordance with ASTM E477 methods and are based upon **ideal** flow conditions (5 diameters of straight duct on silencer inlet and 10 on outlet). Less than ideal conditions will result in an increase in pressure drop due to System Effects. See Silencer System Effects Data.

Duct Connect. Size (in.)	B x B (in.)	Silencer Length (in.)	Weight (lbs)	Face Velocity (ft. per min) / Pressure Drop (in.w.g.)						
				2000	2250	2500	2750	3000	3250	3500
16	**24x24**	36	78	0.01	0.02	0.02	0.03	0.03	0.04	0.04
		48	102	0.02	0.02	0.03	0.03	0.04	0.05	0.05
		60	127	0.02	0.03	0.03	0.04	0.05	0.06	0.07
		72	152	0.03	0.03	0.04	0.05	0.06	0.07	0.08

☐ Acceptable (0 - 0.35") ☐ Caution (>0.35") Pressure Drop may be too high for certain applications

Generated Noise (GN)

@ 1.40 sq.ft. face area

Length (in.)	Face Velocity (ft. per min)	Octave Band - Hz/Generated Noise (dB re 10^{-12} watts)							
		63	125	250	500	1000	2000	4000	8000
All	-3000	62	75	56	79	79	79	79	57
	-2000	62	70	48	74	69	67	66	56
	+2000	64	71	44	73	64	62	59	57
	+3000	69	78	50	79	71	72	72	68

CENM

Circular Elbow
No-Media Silencers

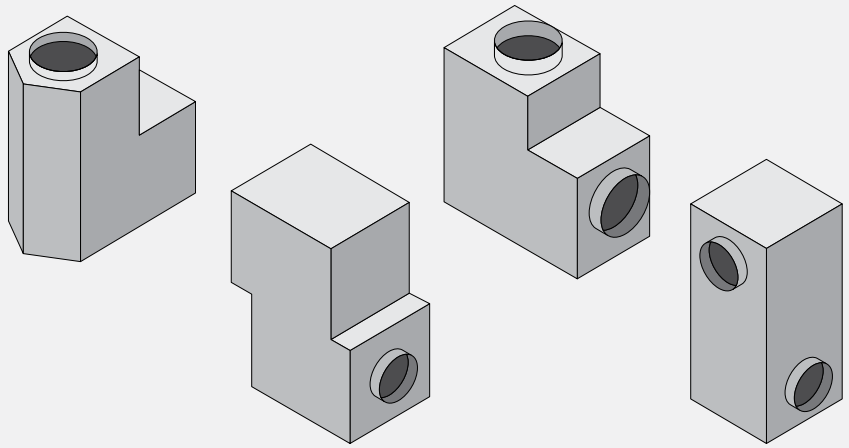

Description

VIBRO-ACOUSTICS' CENM silencers do not contain glass fiber and are void of any fill material whatsoever. The Helmholtz resonator principle is used as the primary sound reducing mechanism. Splitters, sometimes called baffles, incorporate expansion chambers. The chambers are covered by specially tuned perforated metal. Space outside the duct connection size is also used for expansion chambers.

CENM silencers incorporate a full 90 degree and/or a partial bend to fit the duct system configuration. The splitters are aerodynamically designed to turn the air efficiently and minimize pressure drop. They vary in quantity and thickness, and air passages also vary in size.

Model Names

Vibro-Acoustics' silencer model names are coded to help identify their recommended application range.

*The lower the Frequency Indicator, the better the silencer's insertion loss in the low frequency range. The higher the Frequency Indicator, the better the silencer's insertion loss in the mid to high frequency ranges.

Rectangular CENM - ____ - ____

Silencer Type

Velocity Range
LV, MV, HV

Frequency Indicator*
F1, F2

Applications

> When there is not enough space for straight CNM silencers

> Wherever glass fiber is not acceptable in duct and air handling systems

> When it is necessary to periodically sterilize the entire interior of the silencer

> In laboratory fume hood systems, pharmaceutical manufacturing facilities, food processing plants, hospitals, clean rooms, kitchen exhausts, etc.

> In supply, return or exhaust ductwork

> On the receiver side of valves, dampers terminal boxes, etc.

> Recommended duct velocity range

CENM-LV	0-1250 fpm
CENM-MV	1250-1750 fpm
CENM-HV	1750-2250 fpm

Features and Benefits

> Allows silencing when space does not permit the use of straight CNM silencers
> Aerodynamic splitters and specially designed air passage ways efficiently turn the air for minimum pressure drop
> Multiple configurations available such as
  > Offset inlet and/or outlet connection
  > "Z" shaped (two Elbows of any angle in series)
  > Outer body shape and dimensions contoured to fit available space
> No glass fiber particles to contaminate the airstream
> No glass fiber to host contamination within the silencer
> Ability to sterilize the silencer
> Available in any diameters from 8" to 16"; also available in larger diameters - contact our application engineers
> Can be selected to suit the acoustic, space, or energy-cost requirements
> Construction quality and aerodynamic design optimized to give reliable performance, best acoustics, lowest pressure drop and lowest overall cost
> When break-out noise is of prime concern CENM silencers may be appropriate selections. They may require mass/stiffness added to their outer casing. Refer to Silencer Selection Instructions for proper silencer location.

Cautions/When Not to Use CENM Silencers

> When there is enough straight duct length to effectively use CNM straight silencers

Performance Data/Testing

See Performance Data section.
Vibro-Acoustics' 5th generation aero-acoustic laboratory was the first laboratory to be NVLAP accredited (Lab Code 100424-0) for the ASTM E-477 silencer test code. NVLAP is administered by the U.S. Dept. of Commerce.

Silencer Selection and location

Vibro-Acoustics offers multiple selection methods, from our complete analysis service to Do-It-Yourself quick selections. Refer to Silencer Selection Instructions for details.

Standard Construction Features

HTL walls are custom designed to meet the system noise criteria requirements. Consult the Standard Construction Features of the Silencer Type to which the HTL walls are to be applied.

Special Construction Options

> Galvanized, lockformed casing constructed to SMACNA standards
> 2" slip connection at each end
> Special "tuned" perforated galvanized splitters
> Splitters configured with internal "tuned" chambers
> No acoustical media
> 90 degree and/or partial bend to fit system ductwork and space available
> Heavier gauge casings and perforated metal
> Continuously welded casings
> Special materials e.g. stainless steel, aluminum
> Flanges
> Access doors
> High transmission loss (HTL) casings to prevent break-out/break-in noise
> Built in transitions
> For details of above and more special options see Special Construction Options.

CERTIFIED PERFORMANCE DATA

VIBRO-ACOUSTICS®
A Swegon Group company

8 CENM-LV-F1

Circular Elbow No-Media
Low velocity silencer
(<1250 fpm)

How to Specify Example:

8 X **CENM-LV-F1** X **42**

- **8** — Duct Connection Size
- **CENM-LV-F1** — Silencer Model
- **42** — Silencer Length

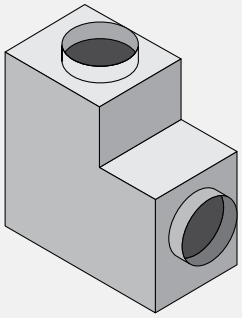

Insertion Loss (IL)

+ : "forward flow" where noise & airflow move in same direction (e.g. supply side)

- : "reverse flow" where noise & airflow move in opposite directions (e.g. return side)

See Silencer Selection Instructions.

Length (in.)	Face Velocity (ft. per min)	Octave Band - Hz/Dynamic Insertion Loss (dB)							
		63	125	250	500	1000	2000	4000	8000
42	- 1250	14	21	36	19	19	18	11	9
	0	13	15	34	14	14	15	13	11
	+ 1250	10	19	38	18	19	19	14	12
54	- 1250	14	23	40	22	20	19	14	11
	0	13	16	39	16	15	17	15	13
	+ 1250	10	22	41	21	21	22	17	13
66	- 1250	14	25	45	24	21	21	16	14
	0	13	18	45	17	16	19	17	16
	+ 1250	9	24	43	25	23	24	19	14
78	- 1250	15	27	49	27	22	23	18	16
	0	12	20	50	19	17	22	19	18
	+ 1250	9	27	46	28	25	27	22	16

Pressure Drop (PD)

Pressure drops are reported in accordance with ASTM E477 methods and are based upon **ideal** flow conditions (5 diameters of straight duct on silencer inlet and 10 on outlet). Less than ideal conditions will result in an increase in pressure drop due to System Effects. See Silencer System Effects Data.

Duct Connect. Size (in.)	B x B (in.)	Silencer Length (in.)	Weight (lbs)	Face Velocity (ft. per min) / Pressure Drop (in.w.g.)						
				250	500	750	1000	1250	1500	1750
8	30x30	42	124	0.01	0.03	0.07	0.13	0.20	0.28	0.38
		54	153	0.01	0.04	0.08	0.14	0.22	0.32	0.44
		66	182	0.01	0.04	0.09	0.16	0.25	0.37	0.50
		78	210	0.01	0.05	0.10	0.18	0.28	0.41	0.56

☐ Acceptable (0 - 0.35") ☐ Caution (>0.35") Pressure Drop may be too high for certain applications

Generated Noise (GN)

@ 0.35 sq.ft. face area

Length (in.)	Face Velocity (ft. per min)	Octave Band - Hz/Generated Noise (dB re 10^{-12} watts)							
		63	125	250	500	1000	2000	4000	8000
All	- 1250	55	50	47	44	43	43	42	45
	- 750	54	47	41	38	35	33	30	40
	+ 750	54	52	39	37	31	31	26	35
	+ 1250	57	56	47	43	41	41	39	40

CERTIFIED PERFORMANCE DATA

VIBRO-ACOUSTICS®
A Swegon Group company

8 CENM-LV-F2

Circular Elbow No-Media
Low velocity silencer
(<1250 fpm)

How to Specify Example:

8 X **CENM-LV-F2** X **52**

- **8** — Duct Connection Size
- **CENM-LV-F2** — Silencer Model
- **52** — Silencer Length

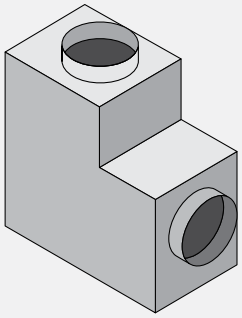

Insertion Loss (IL)

+ : "forward flow" where noise & airflow move in same direction (e.g. supply side)

- : "reverse flow" where noise & airflow move in opposite directions (e.g. return side)

See Silencer Selection Instructions.

Length (in.)	Face Velocity (ft. per min)	Octave Band - Hz/Dynamic Insertion Loss (dB)							
		63	125	250	500	1000	2000	4000	8000
52	- 1250	14	17	31	24	18	15	12	9
	0	12	15	31	18	13	13	13	11
	+ 1250	11	18	34	25	19	17	15	12
64	- 1250	15	21	35	30	21	19	14	11
	0	14	17	34	21	15	17	16	14
	+ 1250	10	21	37	31	22	21	17	14
76	- 1250	17	25	39	36	24	23	16	14
	0	16	19	37	25	17	21	18	16
	+ 1250	10	24	41	37	25	25	20	15
88	- 1250	18	30	43	42	27	27	18	16
	0	18	21	40	29	19	25	20	19
	+ 1250	10	27	45	43	28	29	22	17

Pressure Drop (PD)

Pressure drops are reported in accordance with ASTM E477 methods and are based upon **ideal** flow conditions (5 diameters of straight duct on silencer inlet and 10 on outlet). Less than ideal conditions will result in an increase in pressure drop due to System Effects. See Silencer System Effects Data.

Duct Connect. Size (in.)	B x B (in.)	Silencer Length (in.)	Weight (lbs)	Face Velocity (ft. per min) / Pressure Drop (in.w.g.)						
				250	500	750	1000	1250	1500	1750
8	**20x20**	52	75	0.01	0.03	0.07	0.12	0.18	0.26	0.36
		64	94	0.01	0.03	0.08	0.14	0.21	0.31	0.42
		76	112	0.01	0.04	0.09	0.16	0.24	0.35	0.47
		88	130	0.01	0.04	0.10	0.17	0.27	0.39	0.53

☐ Acceptable (0 - 0.35") ☐ Caution (>0.35") Pressure Drop may be too high for certain applications

Generated Noise (GN)

@ 0.35 sq.ft. face area

Length (in.)	Face Velocity (ft. per min)	Octave Band - Hz/Generated Noise (dB re 10^{-12} watts)							
		63	125	250	500	1000	2000	4000	8000
All	- 1250	52	46	45	46	47	52	48	37
	- 750	44	37	33	39	41	42	31	31
	+ 750	48	41	34	33	38	41	30	28
	+ 1250	58	54	46	42	44	52	48	37

CERTIFIED PERFORMANCE DATA

VIBRO-ACOUSTICS®
A Swegon Group company

10 CENM-LV-F1

Circular Elbow No-Media
Low velocity silencer
(<1250 fpm)

How to Specify Example:

10 X **CENM-LV-F1** X **42**

- 10 — Duct Connection Size
- CENM-LV-F1 — Silencer Model
- 42 — Silencer Length

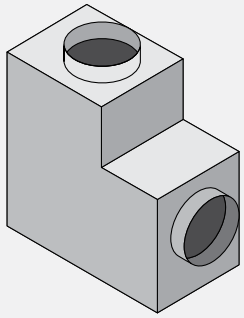

Insertion Loss (IL)

+ : "forward flow" where noise & airflow move in same direction (e.g. supply side)

- : "reverse flow" where noise & airflow move in opposite directions (e.g. return side)

See Silencer Selection Instructions.

Length (in.)	Face Velocity (ft. per min)	Octave Band - Hz/Dynamic Insertion Loss (dB)							
		63	125	250	500	1000	2000	4000	8000
42	- 1250	15	20	33	18	18	16	11	9
	0	14	13	30	14	14	14	11	10
	+ 1250	13	18	34	18	18	17	12	11
54	- 1250	14	20	38	20	19	18	13	11
	0	13	14	36	20	19	20	15	12
	+ 1250	12	19	38	20	19	20	15	12
66	- 1250	14	21	43	21	19	20	15	12
	0	13	15	41	15	15	18	15	13
	+ 1250	11	21	43	22	20	22	17	13
78	- 1250	13	22	48	23	20	22	17	13
	0	12	16	46	16	15	20	17	15
	+ 1250	10	22	47	24	21	24	20	14

Pressure Drop (PD)

Pressure drops are reported in accordance with ASTM E477 methods and are based upon **ideal** flow conditions (5 diameters of straight duct on silencer inlet and 10 on outlet). Less than ideal conditions will result in an increase in pressure drop due to System Effects. See Silencer System Effects Data.

Duct Connect. Size (in.)	B x B (in.)	Silencer Length (in.)	Weight (lbs)	Face Velocity (ft. per min) / Pressure Drop (in.w.g.)						
				250	500	750	1000	1250	1500	1750
10	30x30	42	125	0.01	0.04	0.09	0.15	0.24	0.34	0.47
		54	156	0.01	0.04	0.09	0.16	0.25	0.36	0.50
		66	185	0.01	0.04	0.10	0.17	0.27	0.39	0.52
		78	215	0.01	0.05	0.10	0.18	0.28	0.41	0.55

☐ Acceptable (0 - 0.35") ☐ Caution (>0.35") Pressure Drop may be too high for certain applications

Generated Noise (GN)

@ 0.55 sq.ft. face area

Length (in.)	Face Velocity (ft. per min)	Octave Band - Hz/Generated Noise (dB re 10^{-12} watts)							
		63	125	250	500	1000	2000	4000	8000
All	- 1250	54	51	47	44	43	44	43	41
	- 750	53	46	41	38	36	35	29	33
	+ 750	52	50	40	36	36	35	27	29
	+ 1250	56	56	49	43	43	45	42	40

CERTIFIED PERFORMANCE DATA

VIBRO-ACOUSTICS®
A Swegon Group company

10 CENM-LV-F2

Circular Elbow No-Media
Low velocity silencer
(<1250 fpm)

How to Specify Example:

10 X **CENM-LV-F2** X **52**

- **10**: Duct Connection Size
- **CENM-LV-F2**: Silencer Model
- **52**: Silencer Length

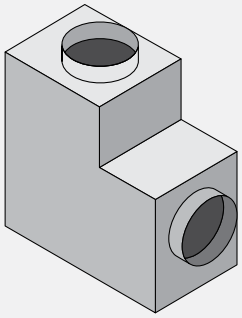

Insertion Loss (IL)

+ : "forward flow" where noise & airflow move in same direction (e.g. supply side)

- : "reverse flow" where noise & airflow move in opposite directions (e.g. return side)

See Silencer Selection Instructions.

Length (in.)	Face Velocity (ft. per min)	Octave Band - Hz/Dynamic Insertion Loss (dB)							
		63	125	250	500	1000	2000	4000	8000
52	- 1250	14	15	27	28	17	15	11	9
	0	11	12	25	21	13	12	11	10
	+ 1250	11	15	28	29	18	16	13	10
64	- 1250	15	18	31	32	19	18	13	11
	0	12	14	28	24	15	16	13	12
	+ 1250	12	17	32	33	21	19	15	12
76	- 1250	16	22	35	35	22	21	15	13
	0	14	16	31	27	17	19	15	14
	+ 1250	12	20	36	36	23	22	17	14
88	- 1250	17	25	39	38	24	24	16	15
	0	15	18	34	29	19	22	17	17
	+ 1250	13	23	39	40	26	26	19	16

Pressure Drop (PD)

Pressure drops are reported in accordance with ASTM E477 methods and are based upon **ideal** flow conditions (5 diameters of straight duct on silencer inlet and 10 on outlet). Less than ideal conditions will result in an increase in pressure drop due to System Effects. See Silencer System Effects Data.

Duct Connect. Size (in.)	B x B (in.)	Silencer Length (in.)	Weight (lbs)	Face Velocity (ft. per min) / Pressure Drop (in.w.g.)						
				250	500	750	1000	1250	1500	1750
10	20x20	52	125	0.01	0.04	0.09	0.16	0.26	0.37	0.50
		64	156	0.01	0.04	0.10	0.17	0.27	0.39	0.53
		76	185	0.01	0.05	0.10	0.18	0.29	0.41	0.56
		88	215	0.01	0.05	0.11	0.19	0.30	0.43	0.59

☐ Acceptable (0 - 0.35") ☐ Caution (>0.35") Pressure Drop may be too high for certain applications

Generated Noise (GN)

@ 0.55 sq.ft. face area

Length (in.)	Face Velocity (ft. per min)	Octave Band - Hz/Generated Noise (dB re 10^{-12} watts)							
		63	125	250	500	1000	2000	4000	8000
All	- 1250	53	48	45	45	46	50	47	38
	- 750	48	41	36	39	40	41	31	31
	+ 750	49	45	36	35	40	43	33	35
	+ 1250	56	54	46	41	45	51	48	41

12 CENM-LV-F1

Circular Elbow No-Media
Low velocity silencer
(<1250 fpm)

How to Specify Example:

12 X **CENM-LV-F1** X **42**

- 12 — Duct Connection Size
- CENM-LV-F1 — Silencer Model
- 42 — Silencer Length

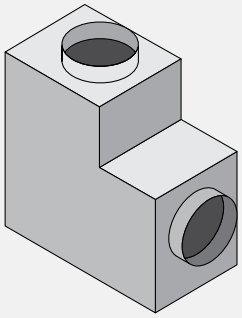

Insertion Loss (IL)

+ : "forward flow" where noise & airflow move in same direction (e.g. supply side)

- : "reverse flow" where noise & airflow move in opposite directions (e.g. return side)

See Silencer Selection Instructions.

Length (in.)	Face Velocity (ft. per min)	Octave Band - Hz/Dynamic Insertion Loss (dB)							
		63	125	250	500	1000	2000	4000	8000
42	- 1250	17	18	30	18	17	15	10	9
	0	14	12	27	14	14	13	9	10
	+ 1250	16	17	31	19	18	15	11	10
54	- 1250	15	18	36	18	18	17	12	10
	0	14	12	32	14	14	15	11	10
	+ 1250	14	17	36	19	18	17	13	11
66	- 1250	13	17	41	18	18	19	15	11
	0	13	13	37	13	13	17	13	11
	+ 1250	13	17	42	20	18	19	15	12
78	- 1250	11	17	47	19	18	21	17	11
	0	12	13	42	12	13	18	16	12
	+ 1250	11	16	47	20	18	21	17	12

Pressure Drop (PD)

Pressure drops are reported in accordance with ASTM E477 methods and are based upon **ideal** flow conditions (5 diameters of straight duct on silencer inlet and 10 on outlet). Less than ideal conditions will result in an increase in pressure drop due to System Effects. See Silencer System Effects Data.

Duct Connect. Size (in.)	B x B (in.)	Silencer Length (in.)	Weight (lbs)	Face Velocity (ft. per min) / Pressure Drop (in.w.g.)						
				250	500	750	1000	1250	1500	1750
12	30x30	42	128	0.01	0.05	0.10	0.18	0.28	0.41	0.55
		54	158							
		66	188							
		78	219							

☐ Acceptable (0 - 0.35") ☐ Caution (>0.35") Pressure Drop may be too high for certain applications

Generated Noise (GN)

@ 0.79 sq.ft. face area

Length (in.)	Face Velocity (ft. per min)	Octave Band - Hz/Generated Noise (dB re 10^{-12} watts)							
		63	125	250	500	1000	2000	4000	8000
All	- 1250	54	52	48	44	44	46	43	37
	- 750	52	46	42	37	37	37	27	25
	+ 750	49	48	40	36	38	39	28	22
	+ 1250	56	57	51	44	45	49	46	39

12 CENM-LV-F2

Circular Elbow No-Media
Low velocity silencer
(<1250 fpm)

How to Specify Example:

12 X **CENM-LV-F2** X **52**

- 12 — Duct Connection Size
- CENM-LV-F2 — Silencer Model
- 52 — Silencer Length

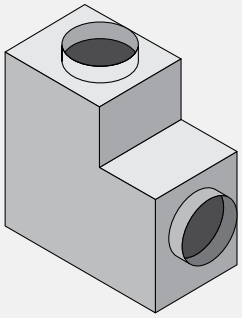

Insertion Loss (IL)

+ : "forward flow" where noise & airflow move in same direction (e.g. supply side)

- : "reverse flow" where noise & airflow move in opposite directions (e.g. return side)

See Silencer Selection Instructions.

Length (in.)	Face Velocity (ft. per min)	Octave Band - Hz/Dynamic Insertion Loss (dB)							
		63	125	250	500	1000	2000	4000	8000
52	- 1250	13	13	24	33	16	14	11	9
	0	9	9	19	24	12	12	9	8
	+ 1250	12	12	23	33	17	14	11	9
64	- 1250	14	15	28	33	18	16	12	11
	0	10	11	22	26	14	14	11	10
	+ 1250	13	14	27	34	19	17	12	11
76	- 1250	15	18	32	34	20	18	13	12
	0	11	14	24	28	16	17	12	12
	+ 1250	14	17	30	35	22	19	14	13
88	- 1250	16	21	36	35	22	21	15	14
	0	13	16	27	30	18	19	14	14
	+ 1250	16	19	34	36	24	22	16	15

Pressure Drop (PD)

Pressure drops are reported in accordance with ASTM E477 methods and are based upon **ideal** flow conditions (5 diameters of straight duct on silencer inlet and 10 on outlet). Less than ideal conditions will result in an increase in pressure drop due to System Effects. See Silencer System Effects Data.

Duct Connect. Size (in.)	B x B (in.)	Silencer Length (in.)	Weight (lbs)	Face Velocity (ft. per min) / Pressure Drop (in.w.g.)						
				250	500	750	1000	1250	1500	1750
12	20x20	52	80	0.01	0.05	0.12	0.21	0.33	0.47	0.64
		64	99							
		76	119							
		88	138							

☐ Acceptable (0 - 0.35") ☐ Caution (>0.35") Pressure Drop may be too high for certain applications

Generated Noise (GN)

@ 0.79 sq.ft. face area

Length (in.)	Face Velocity (ft. per min)	Octave Band - Hz/Generated Noise (dB re 10^{-12} watts)							
		63	125	250	500	1000	2000	4000	8000
All	- 1250	54	50	45	44	45	48	45	39
	- 750	53	46	38	39	39	40	32	31
	+ 750	49	48	39	36	41	44	37	42
	+ 1250	55	54	46	41	45	51	48	46

14 CENM-LV-F1

Circular Elbow No-Media
Low velocity silencer
(<1250 fpm)

How to Specify Example:

14 X **CENM-LV-F1** X **36**

- 14 — Duct Connection Size
- CENM-LV-F1 — Silencer Model
- 36 — Silencer Length

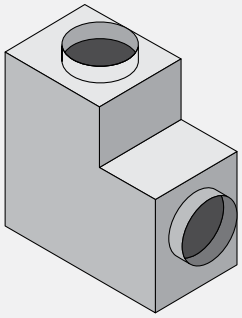

Insertion Loss (IL)

+ : "forward flow" where noise & airflow move in same direction (e.g. supply side)

- : "reverse flow" where noise & airflow move in opposite directions (e.g. return side)

See Silencer Selection Instructions.

Length (in.)	Face Velocity (ft. per min)	Octave Band - Hz/Dynamic Insertion Loss (dB)							
		63	125	250	500	1000	2000	4000	8000
36	- 1250	11	21	28	17	17	13	8	7
	0	12	14	24	12	13	11	8	7
	+ 1250	12	20	28	16	17	13	9	8
48	- 1250	12	20	34	19	18	15	10	8
	0	11	14	28	13	13	13	9	9
	+ 1250	13	19	34	18	18	15	11	9
60	- 1250	13	19	40	21	19	16	11	9
	0	11	14	33	15	14	14	11	10
	+ 1250	14	18	40	20	19	16	12	10
72	- 1250	14	19	46	23	20	18	13	10
	0	11	14	37	16	14	15	12	11
	+ 1250	15	17	46	22	20	18	14	11

Pressure Drop (PD)

Pressure drops are reported in accordance with ASTM E477 methods and are based upon **ideal** flow conditions (5 diameters of straight duct on silencer inlet and 10 on outlet). Less than ideal conditions will result in an increase in pressure drop due to System Effects. See Silencer System Effects Data.

Duct Connect. Size (in.)	B x B (in.)	Silencer Length (in.)	Weight (lbs)	Face Velocity (ft. per min) / Pressure Drop (in.w.g.)						
				250	500	750	1000	1250	1500	1750
14	36x36	36	164	0.01	0.05	0.12	0.21	0.33	0.48	0.65
		48	202	0.01	0.05	0.12	0.22	0.34	0.49	0.66
		60	241	0.01	0.06	0.12	0.22	0.34	0.50	0.67
		72	279	0.01	0.06	0.13	0.22	0.35	0.50	0.68

☐ Acceptable (0 - 0.35") ☐ Caution (>0.35") Pressure Drop may be too high for certain applications

Generated Noise (GN)

@ 1.07 sq.ft. face area

Length (in.)	Face Velocity (ft. per min)	Octave Band - Hz/Generated Noise (dB re 10^{-12} watts)							
		63	125	250	500	1000	2000	4000	8000
All	- 1250	55	53	50	47	48	50	49	42
	- 750	53	48	46	42	43	45	39	33
	+ 750	52	49	42	37	41	42	33	24
	+ 1250	58	57	52	45	47	51	49	41

14 CENM-LV-F2

Circular Elbow No-Media
Low velocity silencer
(<1250 fpm)

How to Specify Example:

14 X **CENM-LV-F2** X **48**

- 14 — Duct Connection Size
- CENM-LV-F2 — Silencer Model
- 48 — Silencer Length

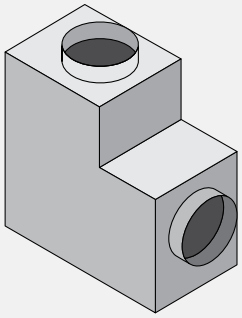

Insertion Loss (IL)

+ : "forward flow" where noise & airflow move in same direction (e.g. supply side)

- : "reverse flow" where noise & airflow move in opposite directions (e.g. return side)

See Silencer Selection Instructions.

Length (in.)	Face Velocity (ft. per min)	Octave Band - Hz/Dynamic Insertion Loss (dB)							
		63	125	250	500	1000	2000	4000	8000
48	- 1250	10	13	24	26	17	13	9	8
	0	7	10	20	18	12	11	8	7
	+ 1250	9	12	23	26	16	14	10	7
60	- 1250	12	15	27	27	18	15	10	9
	0	10	11	21	21	14	13	10	9
	+ 1250	12	15	26	27	18	16	12	8
72	- 1250	15	18	31	29	19	17	12	11
	0	12	13	23	23	15	15	11	11
	+ 1250	15	17	29	28	19	17	14	10
84	- 1250	17	20	34	30	21	18	14	12
	0	15	14	24	25	17	17	13	13
	+ 1250	17	19	32	29	21	19	15	12

Pressure Drop (PD)

Pressure drops are reported in accordance with ASTM E477 methods and are based upon **ideal** flow conditions (5 diameters of straight duct on silencer inlet and 10 on outlet). Less than ideal conditions will result in an increase in pressure drop due to System Effects. See Silencer System Effects Data.

Duct Connect. Size (in.)	B x B (in.)	Silencer Length (in.)	Weight (lbs)	Face Velocity (ft. per min) / Pressure Drop (in.w.g.)						
				250	500	750	1000	1250	1500	1750
14	24x24	48	100	0.01	0.06	0.13	0.22	0.35	0.50	0.68
		60	124	0.02	0.06	0.14	0.24	0.38	0.55	0.75
		72	148	0.02	0.07	0.15	0.26	0.41	0.59	0.81
		84	172	0.02	0.07	0.16	0.28	0.44	0.64	0.87

☐ Acceptable (0 - 0.35") ☐ Caution (>0.35") Pressure Drop may be too high for certain applications

Generated Noise (GN)

@ 1.07 sq.ft. face area

Length (in.)	Face Velocity (ft. per min)	Octave Band - Hz/Generated Noise (dB re 10^{-12} watts)							
		63	125	250	500	1000	2000	4000	8000
All	- 1250	56	53	48	47	48	51	51	45
	- 750	54	49	43	43	44	46	42	37
	+ 750	52	51	41	38	43	46	40	40
	+ 1250	56	56	49	44	47	52	51	47

16 CENM-LV-F1

Circular Elbow No-Media
Low velocity silencer
(<1250 fpm)

How to Specify Example:

16 X **CENM-LV-F1** X **36**

- 16 — Duct Connection Size
- CENM-LV-F1 — Silencer Model
- 36 — Silencer Length

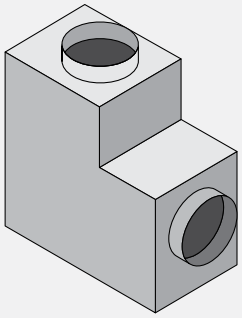

Insertion Loss (IL)

+ : "forward flow" where noise & airflow move in same direction (e.g. supply side)

- : "reverse flow" where noise & airflow move in opposite directions (e.g. return side)

See Silencer Selection Instructions.

Length (in.)	Face Velocity (ft. per min)	Octave Band - Hz/Dynamic Insertion Loss (dB)							
		63	125	250	500	1000	2000	4000	8000
36	- 1250	6	25	25	16	17	11	6	5
	0	9	16	22	10	12	9	6	5
	+ 1250	8	22	26	14	16	11	7	6
48	- 1250	9	23	31	20	18	12	7	6
	0	9	16	25	13	13	10	7	7
	+ 1250	12	21	32	18	18	12	8	7
60	- 1250	13	22	38	24	20	14	8	7
	0	9	16	29	16	14	11	8	9
	+ 1250	15	19	38	21	19	14	10	8
72	- 1250	16	20	44	27	21	15	10	8
	0	10	15	32	20	15	12	9	11
	+ 1250	18	18	45	25	21	15	11	9

Pressure Drop (PD)

Pressure drops are reported in accordance with ASTM E477 methods and are based upon **ideal** flow conditions (5 diameters of straight duct on silencer inlet and 10 on outlet). Less than ideal conditions will result in an increase in pressure drop due to System Effects. See Silencer System Effects Data.

Duct Connect. Size (in.)	B x B (in.)	Silencer Length (in.)	Weight (lbs)	Face Velocity (ft. per min) / Pressure Drop (in.w.g.)						
				250	500	750	1000	1250	1500	1750
16	36x36	36	167	0.02	0.06	0.14	0.25	0.39	0.56	0.76
		48	205	0.02	0.06	0.14	0.25	0.40	0.57	0.78
		60	244	0.02	0.07	0.15	0.26	0.41	0.59	0.80
		72	283	0.02	0.07	0.15	0.27	0.42	0.60	0.82

☐ Acceptable (0 - 0.35") ☐ Caution (>0.35") Pressure Drop may be too high for certain applications

Generated Noise (GN)

@ 1.40 sq.ft. face area

Length (in.)	Face Velocity (ft. per min)	Octave Band - Hz/Generated Noise (dB re 10^{-12} watts)							
		63	125	250	500	1000	2000	4000	8000
All	- 1250	58	55	54	54	56	59	62	53
	- 750	56	53	53	53	55	60	63	48
	+ 750	58	53	45	40	46	50	44	28
	+ 1250	61	59	53	48	51	55	55	45

16 CENM-LV-F2

Circular Elbow No-Media
Low velocity silencer
(<1250 fpm)

How to Specify Example:

16 X **CENM-LV-F2** X **48**

- 16 — Duct Connection Size
- CENM-LV-F2 — Silencer Model
- 48 — Silencer Length

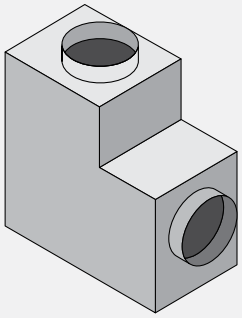

Insertion Loss (IL)

+ : "forward flow" where noise & airflow move in same direction (e.g. supply side)

- : "reverse flow" where noise & airflow move in opposite directions (e.g. return side)

See Silencer Selection Instructions.

Length (in.)	Face Velocity (ft. per min)	Octave Band - Hz/Dynamic Insertion Loss (dB)							
		63	125	250	500	1000	2000	4000	8000
48	- 1250	6	13	25	20	18	13	7	7
	0	5	10	20	13	12	11	7	6
	+ 1250	7	13	24	18	16	14	9	4
60	- 1250	10	15	27	22	19	14	9	8
	0	9	11	21	15	13	12	9	8
	+ 1250	11	15	26	19	17	15	11	6
72	- 1250	14	17	30	23	19	15	11	9
	0	13	12	21	18	14	13	11	10
	+ 1250	15	17	28	21	17	16	13	7
84	- 1250	18	19	32	25	19	16	13	10
	0	17	13	21	20	15	14	13	12
	+ 1250	19	19	31	22	17	17	15	8

Pressure Drop (PD)

Pressure drops are reported in accordance with ASTM E477 methods and are based upon **ideal** flow conditions (5 diameters of straight duct on silencer inlet and 10 on outlet). Less than ideal conditions will result in an increase in pressure drop due to System Effects. See Silencer System Effects Data.

Duct Connect. Size (in.)	B x B (in.)	Silencer Length (in.)	Weight (lbs)	Face Velocity (ft. per min) / Pressure Drop (in.w.g.)						
				250	500	750	1000	1250	1500	1750
16	24x24	48	102	0.01	0.06	0.13	0.24	0.37	0.53	0.72
		60	127	0.02	0.07	0.16	0.28	0.43	0.62	0.85
		72	152	0.02	0.08	0.17	0.32	0.49	0.71	0.97
		84	177	0.02	0.09	0.20	0.36	0.56	0.80	1.09

☐ Acceptable (0 - 0.35") ☐ Caution (>0.35") Pressure Drop may be too high for certain applications

Generated Noise (GN)

@ 1.40 sq.ft. face area

Length (in.)	Face Velocity (ft. per min)	Octave Band - Hz/Generated Noise (dB re 10^{-12} watts)							
		63	125	250	500	1000	2000	4000	8000
All	- 1250	60	57	55	53	55	57	61	56
	- 750	57	56	54	51	54	58	61	51
	+ 750	57	57	47	42	47	50	45	36
	+ 1250	60	61	54	49	51	55	55	48

CERTIFIED PERFORMANCE DATA

VIBRO-ACOUSTICS®
A Swegon Group company

8 CENM-MV-F1

Circular Elbow No-Media
Medium velocity silencer
(<1750 fpm)

How to Specify Example:

8 X **CENM-MV-F1** X **42**

- 8 — Duct Connection Size
- CENM-MV-F1 — Silencer Model
- 42 — Silencer Length

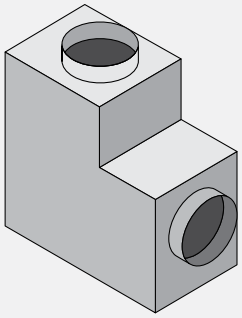

Insertion Loss (IL)

+ : "forward flow" where noise & airflow move in same direction (e.g. supply side)

- : "reverse flow" where noise & airflow move in opposite directions (e.g. return side)

See Silencer Selection Instructions.

Length (in.)	Face Velocity (ft. per min)	Octave Band - Hz/Dynamic Insertion Loss (dB)							
		63	125	250	500	1000	2000	4000	8000
42	- 1750	15	22	36	18	17	16	11	9
	0	14	15	34	14	13	14	12	10
	+ 1750	11	19	38	18	16	17	13	11
54	- 1750	15	23	40	20	18	17	13	11
	0	15	17	37	15	14	16	14	12
	+ 1750	12	21	39	20	19	19	15	13
66	- 1750	15	23	44	22	20	19	15	13
	0	16	18	40	16	15	18	16	14
	+ 1750	13	23	41	23	21	22	18	15
78	- 1750	15	14	48	23	21	20	17	15
	0	16	20	44	17	16	20	18	16
	+ 1750	14	16	43	25	23	24	21	17

Pressure Drop (PD)

Pressure drops are reported in accordance with ASTM E477 methods and are based upon **ideal** flow conditions (5 diameters of straight duct on silencer inlet and 10 on outlet). Less than ideal conditions will result in an increase in pressure drop due to System Effects. See Silencer System Effects Data.

Duct Connect. Size (in.)	B x B (in.)	Silencer Length (in.)	Weight (lbs)	Face Velocity (ft. per min) / Pressure Drop (in.w.g.)						
				750	1000	1250	1500	1750	2000	2250
8	30x30	42	124	0.04	0.08	0.12	0.17	0.23	0.31	0.39
		54	153	0.05	0.08	0.13	0.19	0.25	0.33	0.42
		66	182	0.05	0.09	0.14	0.20	0.27	0.36	0.45
		78	210	0.05	0.10	0.15	0.21	0.29	0.38	0.48

☐ Acceptable (0 - 0.35") ☐ Caution (>0.35") Pressure Drop may be too high for certain applications

Generated Noise (GN)

@ 0.35 sq.ft. face area

Length (in.)	Face Velocity (ft. per min)	Octave Band - Hz/Generated Noise (dB re 10^{-12} watts)							
		63	125	250	500	1000	2000	4000	8000
All	- 1750	55	50	47	46	46	46	43	40
	- 1250	54	48	42	41	39	37	32	36
	+ 1250	54	52	45	41	39	37	31	33
	+ 1750	57	57	52	47	44	46	43	39

CERTIFIED PERFORMANCE DATA

VIBRO-ACOUSTICS®
A Swegon Group company

8 CENM-MV-F2

Circular Elbow No-Media
Medium velocity silencer
(<1750 fpm)

How to Specify Example:

8 X **CENM-MV-F2** X **52**

- **8** — Duct Connection Size
- **CENM-MV-F2** — Silencer Model
- **52** — Silencer Length

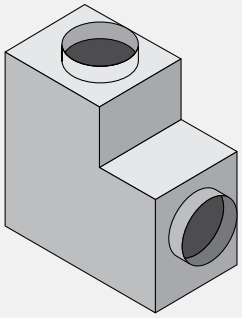

Insertion Loss (IL)

+ : "forward flow" where noise & airflow move in same direction (e.g. supply side)

- : "reverse flow" where noise & airflow move in opposite directions (e.g. return side)

See Silencer Selection Instructions.

Length (in.)	Face Velocity (ft. per min)	Octave Band - Hz/Dynamic Insertion Loss (dB)							
		63	125	250	500	1000	2000	4000	8000
52	- 1750	15	17	30	28	16	14	11	9
	0	13	13	30	20	12	12	12	10
	+ 1750	12	16	32	27	18	16	14	12
64	- 1750	16	20	33	31	19	17	13	10
	0	15	16	31	22	14	15	15	13
	+ 1750	12	20	34	31	20	19	16	13
76	- 1750	16	23	36	35	21	19	14	10
	0	17	19	31	25	15	18	17	15
	+ 1750	13	23	36	36	22	22	18	15
88	- 1750	17	25	39	38	24	22	15	11
	0	18	22	32	28	17	21	19	17
	+ 1750	14	26	38	41	25	25	21	17

Pressure Drop (PD)

Pressure drops are reported in accordance with ASTM E477 methods and are based upon **ideal** flow conditions (5 diameters of straight duct on silencer inlet and 10 on outlet). Less than ideal conditions will result in an increase in pressure drop due to System Effects. See Silencer System Effects Data.

Duct Connect. Size (in.)	B x B (in.)	Silencer Length (in.)	Weight (lbs)	Face Velocity (ft. per min) / Pressure Drop (in.w.g.)						
				750	1000	1250	1500	1750	2000	2250
8	**20x20**	52	75	0.04	0.07	0.11	0.16	0.22	0.29	0.37
		64	94	0.04	0.08	0.12	0.18	0.24	0.32	0.40
		76	112	0.05	0.09	0.14	0.20	0.27	0.35	0.44
		88	130	0.05	0.09	0.15	0.21	0.29	0.38	0.47

☐ Acceptable (0 - 0.35") ☐ Caution (>0.35") Pressure Drop may be too high for certain applications

Generated Noise (GN)

@ 0.35 sq.ft. face area

Length (in.)	Face Velocity (ft. per min)	Octave Band - Hz/Generated Noise (dB re 10^{-12} watts)							
		63	125	250	500	1000	2000	4000	8000
All	- 1750	53	49	46	47	48	51	47	36
	- 1250	49	43	38	41	42	42	33	32
	+ 1250	51	47	42	40	41	42	32	29
	+ 1750	58	56	51	47	47	52	48	37

CERTIFIED PERFORMANCE DATA

VIBRO-ACOUSTICS®
A Swegon Group company

10 CENM-MV-F1

Circular Elbow No-Media
Medium velocity silencer
(<1750 fpm)

How to Specify Example:

10 X **CENM-MV-F1** X **42**

- **10** — Duct Connection Size
- **CENM-MV-F1** — Silencer Model
- **42** — Silencer Length

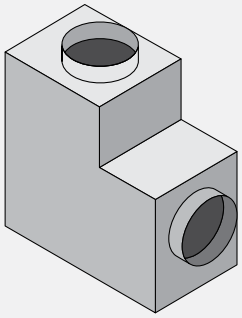

Insertion Loss (IL)

+ : "forward flow" where noise & airflow move in same direction (e.g. supply side)

- : "reverse flow" where noise & airflow move in opposite directions (e.g. return side)

See Silencer Selection Instructions.

Length (in.)	Face Velocity (ft. per min)	Octave Band - Hz/Dynamic Insertion Loss (dB)							
		63	125	250	500	1000	2000	4000	8000
42	- 1750	15	20	32	17	16	14	10	9
	0	13	13	29	13	12	13	10	9
	+ 1750	12	18	33	17	16	15	11	10
54	- 1750	15	20	37	19	17	16	12	10
	0	14	14	33	13	13	15	12	11
	+ 1750	13	19	37	19	18	17	14	12
66	- 1750	15	20	43	21	19	18	14	12
	0	14	15	37	14	13	16	15	12
	+ 1750	13	20	41	21	19	20	17	13
78	- 1750	15	21	48	22	20	20	16	13
	0	15	16	42	15	14	18	17	14
	+ 1750	13	21	44	23	21	22	19	15

Pressure Drop (PD)

Pressure drops are reported in accordance with ASTM E477 methods and are based upon **ideal** flow conditions (5 diameters of straight duct on silencer inlet and 10 on outlet). Less than ideal conditions will result in an increase in pressure drop due to System Effects. See Silencer System Effects Data.

Duct Connect. Size (in.)	B x B (in.)	Silencer Length (in.)	Weight (lbs)	Face Velocity (ft. per min) / Pressure Drop (in.w.g.)						
				750	1000	1250	1500	1750	2000	2250
10	**30x30**	42	125	0.05	0.09	0.14	0.20	0.27	0.35	0.45
		54	156	0.05	0.09	0.15	0.21	0.29	0.38	0.48
		66	185	0.06	0.10	0.16	0.22	0.30	0.40	0.50
		78	215	0.06	0.11	0.16	0.24	0.32	0.42	0.53

☐ Acceptable (0 - 0.35") ☐ Caution (>0.35") Pressure Drop may be too high for certain applications

Generated Noise (GN)

@ 0.55 sq.ft. face area

Length (in.)	Face Velocity (ft. per min)	Octave Band - Hz/Generated Noise (dB re 10^{-12} watts)							
		63	125	250	500	1000	2000	4000	8000
All	- 1750	55	52	49	47	47	48	46	40
	- 1250	54	48	44	41	40	39	34	34
	+ 1250	54	53	46	41	40	40	34	32
	+ 1750	58	58	54	47	46	49	47	40

CERTIFIED PERFORMANCE DATA

VIBRO-ACOUSTICS®
A Swegon Group company

10 CENM-MV-F2

Circular Elbow No-Media
Medium velocity silencer
(<1750 fpm)

How to Specify Example:

10 X **CENM-MV-F2** X **52**

- 10 — Duct Connection Size
- CENM-MV-F2 — Silencer Model
- 52 — Silencer Length

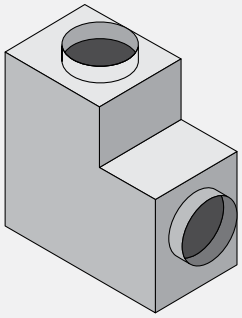

Insertion Loss (IL)

+ : "forward flow" where noise & airflow move in same direction (e.g. supply side)

- : "reverse flow" where noise & airflow move in opposite directions (e.g. return side)

See Silencer Selection Instructions.

Length (in.)	Face Velocity (ft. per min)	Octave Band - Hz/Dynamic Insertion Loss (dB)							
		63	125	250	500	1000	2000	4000	8000
52	- 1750	13	15	26	29	16	14	11	9
	0	10	11	24	21	12	12	11	10
	+ 1750	11	14	27	29	17	14	12	10
64	- 1750	15	17	29	32	18	16	12	10
	0	12	13	25	24	13	14	12	11
	+ 1750	11	17	29	33	19	17	14	12
76	- 1750	16	20	33	35	21	18	13	11
	0	14	16	27	29	15	16	14	13
	+ 1750	12	20	32	39	22	19	16	14
88	- 1750	17	22	36	37	23	20	15	12
	0	15	18	28	29	17	19	16	14
	+ 1750	13	22	34	40	24	21	18	15

Pressure Drop (PD)

Pressure drops are reported in accordance with ASTM E477 methods and are based upon **ideal** flow conditions (5 diameters of straight duct on silencer inlet and 10 on outlet). Less than ideal conditions will result in an increase in pressure drop due to System Effects. See Silencer System Effects Data.

Duct Connect. Size (in.)	B x B (in.)	Silencer Length (in.)	Weight (lbs)	Face Velocity (ft. per min) / Pressure Drop (in.w.g.)						
				750	1000	1250	1500	1750	2000	2250
10	20x20	52	78	0.05	0.08	0.13	0.19	0.26	0.34	0.42
		64	97	0.05	0.09	0.14	0.21	0.28	0.37	0.47
		76	115	0.06	0.10	0.16	0.23	0.31	0.40	0.51
		88	134	0.06	0.11	0.17	0.25	0.33	0.44	0.55

☐ Acceptable (0 - 0.35") ☐ Caution (>0.35") Pressure Drop may be too high for certain applications

Generated Noise (GN)

@ 0.55 sq.ft. face area

Length (in.)	Face Velocity (ft. per min)	Octave Band - Hz/Generated Noise (dB re 10^{-12} watts)							
		63	125	250	500	1000	2000	4000	8000
All	- 1750	54	51	47	48	48	51	48	38
	- 1250	51	46	40	42	42	42	35	32
	+ 1250	51	49	43	40	42	44	36	34
	+ 1750	57	57	52	47	48	53	50	41

12 CENM-MV-F1

Circular Elbow No-Media
Medium velocity silencer
(<1750 fpm)

How to Specify Example:

12 X **CENM-MV-F1** X **42**

- 12 — Duct Connection Size
- CENM-MV-F1 — Silencer Model
- 42 — Silencer Length

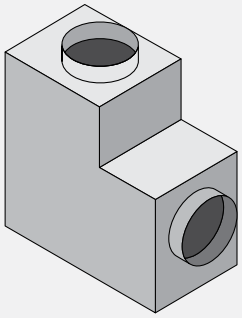

Insertion Loss (IL)

+ : "forward flow" where noise & airflow move in same direction (e.g. supply side)

- : "reverse flow" where noise & airflow move in opposite directions (e.g. return side)

See Silencer Selection Instructions.

Length (in.)	Face Velocity (ft. per min)	Octave Band - Hz/Dynamic Insertion Loss (dB)							
		63	125	250	500	1000	2000	4000	8000
42	- 1750	15	17	28	16	15	13	9	10
	0	13	12	24	12	12	11	8	8
	+ 1750	14	17	29	17	16	13	9	9
54	- 1750	15	17	35	18	17	15	11	10
	0	13	12	29	12	12	13	11	10
	+ 1750	13	16	35	19	7	15	12	11
66	- 1750	14	17	41	20	18	17	13	11
	0	13	12	35	12	12	15	14	11
	+ 1750	13	16	40	20	17	18	15	12
78	- 1750	14	18	48	21	19	19	16	11
	0	13	12	40	12	12	17	16	12
	+ 1750	12	16	45	21	19	20	18	14

Pressure Drop (PD)

Pressure drops are reported in accordance with ASTM E477 methods and are based upon **ideal** flow conditions (5 diameters of straight duct on silencer inlet and 10 on outlet). Less than ideal conditions will result in an increase in pressure drop due to System Effects. See Silencer System Effects Data.

Duct Connect. Size (in.)	B x B (in.)	Silencer Length (in.)	Weight (lbs)	Face Velocity (ft. per min) / Pressure Drop (in.w.g.)						
				750	1000	1250	1500	1750	2000	2250
12	30x30	42	128	0.06	0.10	0.16	0.23	0.31	0.40	0.51
		54	158	0.06	0.11	0.16	0.24	0.32	0.42	0.53
		66	188	0.06	0.11	0.17	0.25	0.34	0.44	0.56
		78	219	0.06	0.12	0.18	0.26	0.35	0.46	0.58

☐ Acceptable (0 - 0.35") ☐ Caution (>0.35") Pressure Drop may be too high for certain applications

Generated Noise (GN)

@ 0.79 sq.ft. face area

Length (in.)	Face Velocity (ft. per min)	Octave Band - Hz/Generated Noise (dB re 10^{-12} watts)							
		63	125	250	500	1000	2000	4000	8000
All	- 1750	56	54	51	48	48	51	49	40
	- 1250	54	49	45	42	41	42	36	31
	+ 1250	56	53	47	41	42	43	36	30
	+ 1750	28	59	56	48	48	52	51	41

12 CENM-MV-F2

Circular Elbow No-Media
Medium velocity silencer
(<1750 fpm)

How to Specify Example:

12 X **CENM-MV-F2** X **52**

- 12 — Duct Connection Size
- CENM-MV-F2 — Silencer Model
- 52 — Silencer Length

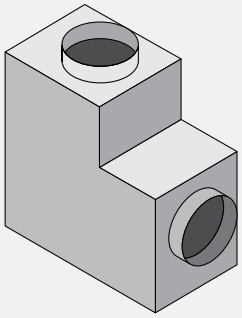

Insertion Loss (IL)

+ : "forward flow" where noise & airflow move in same direction (e.g. supply side)

- : "reverse flow" where noise & airflow move in opposite directions (e.g. return side)

See Silencer Selection Instructions.

Length (in.)	Face Velocity (ft. per min)	Octave Band - Hz/Dynamic Insertion Loss (dB)							
		63	125	250	500	1000	2000	4000	8000
52	- 1750	12	12	22	31	16	14	10	9
	0	8	9	18	23	12	11	9	9
	+ 1750	9	11	21	31	16	13	10	9
64	- 1750	14	15	25	33	18	15	11	10
	0	9	11	20	25	13	13	10	10
	+ 1750	10	14	24	34	19	15	12	11
76	- 1750	15	17	29	35	20	16	13	11
	0	11	13	22	27	15	15	12	11
	+ 1750	12	16	27	36	21	17	13	12
88	- 1750	16	19	32	37	22	18	14	13
	0	12	15	24	29	17	16	13	11
	+ 1750	13	18	30	39	23	18	15	13

Pressure Drop (PD)

Pressure drops are reported in accordance with ASTM E477 methods and are based upon **ideal** flow conditions (5 diameters of straight duct on silencer inlet and 10 on outlet). Less than ideal conditions will result in an increase in pressure drop due to System Effects. See Silencer System Effects Data.

Duct Connect. Size (in.)	B x B (in.)	Silencer Length (in.)	Weight (lbs)	Face Velocity (ft. per min) / Pressure Drop (in.w.g.)						
				750	1000	1250	1500	1750	2000	2250
12	20x20	52	80	0.05	0.10	0.15	0.21	0.29	0.38	0.48
		64	99	0.06	0.11	0.16	0.24	0.32	0.42	0.53
		76	119	0.06	0.12	0.18	0.26	0.35	0.46	0.58
		88	138	0.07	0.13	0.20	0.28	0.38	0.50	0.63

☐ Acceptable (0 - 0.35") ☐ Caution (>0.35") Pressure Drop may be too high for certain applications

Generated Noise (GN)

@ 0.79 sq.ft. face area

Length (in.)	Face Velocity (ft. per min)	Octave Band - Hz/Generated Noise (dB re 10^{-12} watts)							
		63	125	250	500	1000	2000	4000	8000
All	- 1750	55	53	49	48	48	51	49	40
	- 1250	54	49	43	42	42	43	36	33
	+ 1250	51	51	45	41	42	45	39	38
	+ 1750	56	58	52	47	48	54	52	45

14 CENM-MV-F1

Circular Elbow No-Media
Medium velocity silencer
(<1750 fpm)

How to Specify Example:

14 X **CENM-MV-F1** X **36**

- **14** — Duct Connection Size
- **CENM-MV-F1** — Silencer Model
- **36** — Silencer Length

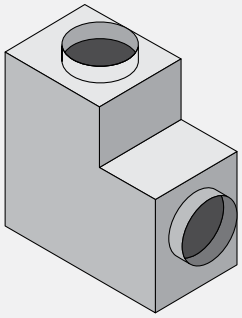

Insertion Loss (IL)

+ : "forward flow" where noise & airflow move in same direction (e.g. supply side)

- : "reverse flow" where noise & airflow move in opposite directions (e.g. return side)

See Silencer Selection Instructions.

Length (in.)	Face Velocity (ft. per min)	Octave Band - Hz/Dynamic Insertion Loss (dB)							
		63	125	250	500	1000	2000	4000	8000
36	- 1750	11	18	25	15	15	11	7	7
	0	10	13	20	10	11	10	7	7
	+ 1750	11	17	25	15	15	11	8	7
48	- 1750	12	19	32	18	16	13	8	7
	0	10	13	26	12	12	11	9	8
	+ 1750	12	18	31	17	16	13	10	9
60	- 1750	13	20	39	20	18	15	10	8
	0	11	14	31	14	13	13	11	9
	+ 1750	13	19	38	20	18	15	12	10
72	- 1750	14	20	47	23	19	16	12	9
	0	11	14	36	15	14	14	12	11
	+ 1750	14	19	45	22	19	17	14	11

Pressure Drop (PD)

Pressure drops are reported in accordance with ASTM E477 methods and are based upon **ideal** flow conditions (5 diameters of straight duct on silencer inlet and 10 on outlet). Less than ideal conditions will result in an increase in pressure drop due to System Effects. See Silencer System Effects Data.

Duct Connect. Size (in.)	B x B (in.)	Silencer Length (in.)	Weight (lbs)	Face Velocity (ft. per min) / Pressure Drop (in.w.g.)						
				750	1000	1250	1500	1750	2000	2250
14	36x36	36	164	0.06	0.10	0.16	0.23	0.31	0.40	0.51
		48	202	0.06	0.10	0.16	0.23	0.32	0.41	0.52
		60	241	0.06	0.11	0.17	0.24	0.32	0.42	0.54
		72	279	0.06	0.11	0.17	0.24	0.33	0.43	0.55

☐ Acceptable (0 - 0.35") ☐ Caution (>0.35") Pressure Drop may be too high for certain applications

Generated Noise (GN)

@ 1.07 sq.ft. face area

Length (in.)	Face Velocity (ft. per min)	Octave Band - Hz/Generated Noise (dB re 10^{-12} watts)							
		63	125	250	500	1000	2000	4000	8000
All	- 1750	58	55	54	52	52	56	55	46
	- 1250	55	51	48	48	46	47	43	37
	+ 1250	55	55	48	48	43	45	39	33
	+ 1750	60	61	57	57	51	55	54	46

14 CENM-MV-F2

Circular Elbow No-Media
Medium velocity silencer
(<1750 fpm)

How to Specify Example:

14 X **CENM-MV-F2** X **48**

- **14** — Duct Connection Size
- **CENM-MV-F2** — Silencer Model
- **48** — Silencer Length

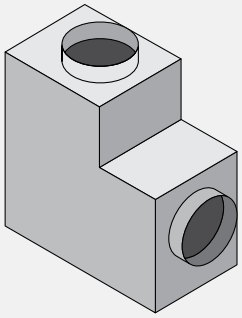

Insertion Loss (IL)

+ : "forward flow" where noise & airflow move in same direction (e.g. supply side)

- : "reverse flow" where noise & airflow move in opposite directions (e.g. return side)

See Silencer Selection Instructions.

Length (in.)	Face Velocity (ft. per min)	Octave Band - Hz/Dynamic Insertion Loss (dB)							
		63	125	250	500	1000	2000	4000	8000
48	- 1750	9	11	21	25	16	12	7	7
	0	6	8	17	17	11	10	8	7
	+ 1750	8	11	21	24	16	12	9	7
60	- 1750	11	13	24	26	17	13	9	8
	0	9	10	19	19	12	12	9	9
	+ 1750	10	13	23	26	17	14	11	9
72	- 1750	14	16	27	28	18	15	10	9
	0	11	11	21	21	13	13	11	10
	+ 1750	12	15	26	27	18	15	12	10
84	- 1750	16	18	31	29	19	17	12	10
	0	13	13	23	23	15	15	12	12
	+ 1750	14	17	28	29	19	17	14	11

Pressure Drop (PD)

Pressure drops are reported in accordance with ASTM E477 methods and are based upon **ideal** flow conditions (5 diameters of straight duct on silencer inlet and 10 on outlet). Less than ideal conditions will result in an increase in pressure drop due to System Effects. See Silencer System Effects Data.

Duct Connect. Size (in.)	B x B (in.)	Silencer Length (in.)	Weight (lbs)	Face Velocity (ft. per min) / Pressure Drop (in.w.g.)						
				750	1000	1250	1500	1750	2000	2250
14	**24x24**	48	100	0.06	0.10	0.16	0.23	0.31	0.40	0.51
		60	124	0.06	0.11	0.18	0.26	0.35	0.46	0.58
		72	148	0.07	0.13	0.20	0.29	0.39	0.51	0.65
		84	172	0.08	0.14	0.22	0.32	0.43	0.56	0.71

☐ Acceptable (0 - 0.35") ☐ Caution (>0.35") Pressure Drop may be too high for certain applications

Generated Noise (GN)

@ 1.07 sq.ft. face area

Length (in.)	Face Velocity (ft. per min)	Octave Band - Hz/Generated Noise (dB re 10^{-12} watts)							
		63	125	250	500	1000	2000	4000	8000
All	- 1750	58	56	52	50	51	54	53	45
	- 1250	56	52	46	44	46	47	43	39
	+ 1250	55	55	47	43	45	48	43	40
	+ 1750	59	62	55	49	51	56	56	49

16 CENM-MV-F1

Circular Elbow No-Media
Medium velocity silencer
(<1750 fpm)

How to Specify Example:

16 X **CENM-MV-F1** X **36**

- 16 — Duct Connection Size
- CENM-MV-F1 — Silencer Model
- 36 — Silencer Length

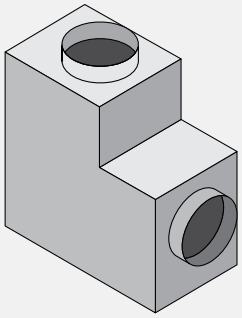

Insertion Loss (IL)

+ : "forward flow" where noise & airflow move in same direction (e.g. supply side)

- : "reverse flow" where noise & airflow move in opposite directions (e.g. return side)

See Silencer Selection Instructions.

Length (in.)	Face Velocity (ft. per min)	Octave Band - Hz/Dynamic Insertion Loss (dB)							
		63	125	250	500	1000	2000	4000	8000
36	- 1750	8	19	21	14	14	9	4	4
	0	7	14	16	9	10	8	6	5
	+ 1750	8	18	20	13	13	10	6	6
48	- 1750	10	20	29	18	16	11	5	5
	0	8	14	22	12	12	9	7	7
	+ 1750	10	20	28	16	15	11	7	7
60	- 1750	12	22	38	21	18	12	7	6
	0	9	15	28	15	14	10	8	8
	+ 1750	13	21	37	20	17	12	8	8
72	- 1750	14	23	46	24	19	13	8	7
	0	10	16	33	18	16	11	9	10
	+ 1750	15	23	45	23	19	13	9	8

Pressure Drop (PD)

Pressure drops are reported in accordance with ASTM E477 methods and are based upon **ideal** flow conditions (5 diameters of straight duct on silencer inlet and 10 on outlet). Less than ideal conditions will result in an increase in pressure drop due to System Effects. See Silencer System Effects Data.

Duct Connect. Size (in.)	B x B (in.)	Silencer Length (in.)	Weight (lbs)	Face Velocity (ft. per min) / Pressure Drop (in.w.g.)						
				750	1000	1250	1500	1750	2000	2250
16	36x36	36	167	0.06	0.10	0.16	0.23	0.31	0.40	0.51
		48	205	0.06	0.10	0.16	0.23	0.31	0.41	0.51
		60	244	0.06	0.10	0.16	0.23	0.31	0.41	0.52
		72	283	0.06	0.10	0.16	0.23	0.31	0.41	0.52

☐ Acceptable (0 - 0.35") ☐ Caution (>0.35") Pressure Drop may be too high for certain applications

Generated Noise (GN)

@ 1.40 sq.ft. face area

Length (in.)	Face Velocity (ft. per min)	Octave Band - Hz/Generated Noise (dB re 10^{-12} watts)							
		63	125	250	500	1000	2000	4000	8000
All	- 1750	62	59	59	59	62	66	67	59
	- 1250	57	54	52	53	55	57	57	48
	+ 1250	60	57	49	46	49	51	46	38
	+ 1750	64	66	58	56	57	61	60	55

16 CENM-MV-F2

Circular Elbow No-Media
Medium velocity silencer
(<1750 fpm)

How to Specify Example:

16 X **CENM-MV-F2** X **48**

- 16 — Duct Connection Size
- CENM-MV-F2 — Silencer Model
- 48 — Silencer Length

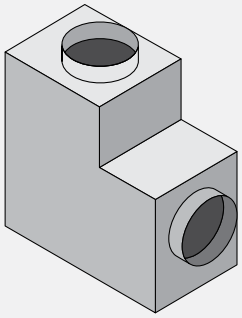

Insertion Loss (IL)

+ : "forward flow" where noise & airflow move in same direction (e.g. supply side)

- : "reverse flow" where noise & airflow move in opposite directions (e.g. return side)

See Silencer Selection Instructions.

Length (in.)	Face Velocity (ft. per min)	16Octave Band - Hz/Dynamic Insertion Loss (dB)							
		63	125	250	500	1000	2000	4000	8000
48	- 1750	6	10	21	19	16	10	5	5
	0	5	8	17	11	11	9	7	6
	+ 1750	6	10	20	16	15	11	8	5
60	- 1750	9	12	23	20	16	12	6	6
	0	8	9	19	13	11	11	8	8
	+ 1750	9	12	22	17	15	13	9	7
72	- 1750	13	15	26	20	17	14	8	7
	0	11	10	20	15	12	12	10	10
	+ 1750	13	13	24	18	15	14	11	8
84	- 1750	17	17	29	21	17	16	10	8
	0	14	11	22	16	13	14	11	12
	+ 1750	16	15	27	19	15	16	13	9

Pressure Drop (PD)

Pressure drops are reported in accordance with ASTM E477 methods and are based upon **ideal** flow conditions (5 diameters of straight duct on silencer inlet and 10 on outlet). Less than ideal conditions will result in an increase in pressure drop due to System Effects. See Silencer System Effects Data.

Duct Connect. Size (in.)	B x B (in.)	Silencer Length (in.)	Weight (lbs)	Face Velocity (ft. per min) / Pressure Drop (in.w.g.)						
				750	1000	1250	1500	1750	2000	2250
16	24x24	48	102	0.06	0.11	0.16	0.24	0.32	0.42	0.53
		60	127	0.07	0.12	0.19	0.28	0.38	0.49	0.62
		72	152	0.08	0.14	0.22	0.31	0.43	0.56	0.71
		84	177	0.09	0.16	0.25	0.35	0.48	0.63	0.80

☐ Acceptable (0 - 0.35") ☐ Caution (>0.35") Pressure Drop may be too high for certain applications

Generated Noise (GN)

@ 1.40 sq.ft. face area

Length (in.)	Face Velocity (ft. per min)	Octave Band - Hz/Generated Noise (dB re 10^{-12} watts)							
		63	125	250	500	1000	2000	4000	8000
All	- 1750	62	58	53	57	60	62	55	
	- 1250	59	54	54	53	56	56	50	
	+ 1250	62	65	65	46	51	54	52	45
	+ 1750	65	70	70	53	57	61	64	56

CERTIFIED PERFORMANCE DATA

VIBRO-ACOUSTICS®
A Swegon Group company

8 CENM-HV-F1

Circular Elbow No-Media
High velocity silencer
(<2250 fpm)

How to Specify Example:

8 X **CENM-HV-F1** X **42**

- 8 — Duct Connection Size
- CENM-HV-F1 — Silencer Model
- 42 — Silencer Length

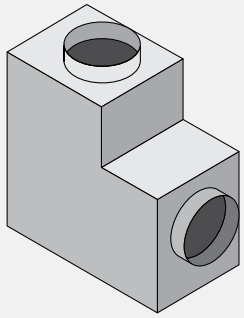

Insertion Loss (IL)

+ : "forward flow" where noise & airflow move in same direction (e.g. supply side)

- : "reverse flow" where noise & airflow move in opposite directions (e.g. return side)

See Silencer Selection Instructions.

Length (in.)	Face Velocity (ft. per min)	Octave Band - Hz/Dynamic Insertion Loss (dB)							
		63	125	250	500	1000	2000	4000	8000
42	- 2250	15	23	37	16	14	14	11	8
	0	14	15	34	13	11	12	11	9
	+ 2250	12	19	38	18	14	15	12	10
54	- 2250	16	23	40	17	17	15	12	10
	0	16	17	35	14	12	14	13	11
	+ 2250	14	21	38	19	17	17	14	13
66	- 2250	16	22	44	19	19	17	14	12
	0	18	18	36	15	14	16	15	13
	+ 2250	16	22	39	21	19	19	17	15
78	- 2250	16	21	47	20	21	18	16	13
	0	21	19	37	15	15	18	17	14
	+ 2250	18	24	40	23	22	21	19	18

Pressure Drop (PD)

Pressure drops are reported in accordance with ASTM E477 methods and are based upon **ideal** flow conditions (5 diameters of straight duct on silencer inlet and 10 on outlet). Less than ideal conditions will result in an increase in pressure drop due to System Effects. See Silencer System Effects Data.

Duct Connect. Size (in.)	B x B (in.)	Silencer Length (in.)	Weight (lbs)	Face Velocity (ft. per min) / Pressure Drop (in.w.g.)						
				1250	1500	1750	2000	2250	2500	2750
8	30x30	42	124	0.08	0.12	0.16	0.21	0.27	0.33	0.40
		54	153	0.08	0.12	0.16	0.21	0.27	0.33	0.40
		66	182	0.08	0.12	0.16	0.21	0.27	0.33	0.40
		78	210	0.08	0.12	0.16	0.21	0.27	0.33	0.40

☐ Acceptable (0 - 0.35") ☐ Caution (>0.35") Pressure Drop may be too high for certain applications

Generated Noise (GN)

@ 0.35 sq.ft. face area

Length (in.)	Face Velocity (ft. per min)	Octave Band - Hz/Generated Noise (dB re 10^{-12} watts)							
		63	125	250	500	1000	2000	4000	8000
All	- 2250	55	51	47	47	49	49	45	36
	- 1750	54	49	43	43	44	42	35	32
	+ 1750	54	52	51	45	44	44	36	31
	+ 2250	57	58	57	51	48	50	47	37

CERTIFIED PERFORMANCE DATA

VIBRO-ACOUSTICS®
A Swegon Group company

8 CENM-HV-F2

Circular Elbow No-Media
High velocity silencer
(<2250 fpm)

How to Specify Example:

8 X **CENM-HV-F2** X **52**

- 8: Duct Connection Size
- CENM-HV-F2: Silencer Model
- 52: Silencer Length

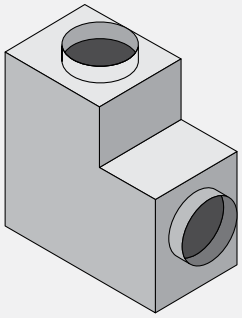

Insertion Loss (IL)

+ : "forward flow" where noise & airflow move in same direction (e.g. supply side)

- : "reverse flow" where noise & airflow move in opposite directions (e.g. return side)

See Silencer Selection Instructions.

Length (in.)	Face Velocity (ft. per min)	Octave Band - Hz/Dynamic Insertion Loss (dB)							
		63	125	250	500	1000	2000	4000	8000
52	- 2250	15	17	30	31	15	13	11	9
	0	14	12	29	21	11	12	12	10
	+ 2250	13	15	31	28	16	14	13	12
64	- 2250	16	18	32	32	17	14	12	8
	0	15	16	27	23	12	14	13	12
	+ 2250	14	19	31	32	18	16	15	13
76	- 2250	16	20	34	33	19	15	12	7
	0	17	19	26	26	14	15	15	13
	+ 2250	16	22	32	35	20	18	17	15
88	- 2250	17	21	36	34	21	16	13	5
	0	19	22	24	28	15	17	17	14
	+ 2250	18	26	32	38	21	20	19	17

Pressure Drop (PD)

Pressure drops are reported in accordance with ASTM E477 methods and are based upon **ideal** flow conditions (5 diameters of straight duct on silencer inlet and 10 on outlet). Less than ideal conditions will result in an increase in pressure drop due to System Effects. See Silencer System Effects Data.

Duct Connect. Size (in.)	B x B (in.)	Silencer Length (in.)	Weight (lbs)	Face Velocity (ft. per min) / Pressure Drop (in.w.g.)						
				1250	1500	1750	2000	2250	2500	2750
8	20x20	52	75	0.08	0.11	0.15	0.20	0.25	0.31	0.38
		64	94	0.08	0.12	0.16	0.21	0.26	0.32	0.39
		76	112	0.08	0.12	0.16	0.21	0.27	0.33	0.40
		88	130	0.08	0.12	0.16	0.21	0.27	0.34	0.41

☐ Acceptable (0 - 0.35") ☐ Caution (>0.35") Pressure Drop may be too high for certain applications

Generated Noise (GN)

@ 0.35 sq.ft. face area

Length (in.)	Face Velocity (ft. per min)	Octave Band - Hz/Generated Noise (dB re 10^{-12} watts)							
		63	125	250	500	1000	2000	4000	8000
All	- 2250	55	52	47	48	49	50	46	36
	- 1750	54	50	43	44	44	42	35	32
	+ 1750	54	52	50	46	44	43	35	31
	+ 2250	58	58	57	53	49	52	48	38

CERTIFIED PERFORMANCE DATA

VIBRO-ACOUSTICS®
A Swegon Group company

10 CENM-HV-F1

Circular Elbow No-Media
High velocity silencer
(<2250 fpm)

How to Specify Example:

10 X **CENM-HV-F1** X **42**

- 10 — Duct Connection Size
- CENM-HV-F1 — Silencer Model
- 42 — Silencer Length

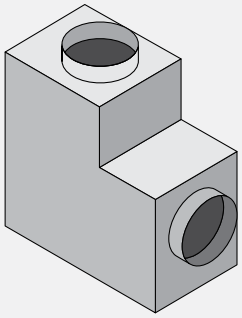

Insertion Loss (IL)

+ : "forward flow" where noise & airflow move in same direction (e.g. supply side)

- : "reverse flow" where noise & airflow move in opposite directions (e.g. return side)

See Silencer Selection Instructions.

Length (in.)	Face Velocity (ft. per min)	Octave Band - Hz/Dynamic Insertion Loss (dB)							
		63	125	250	500	1000	2000	4000	8000
42	- 2250	14	20	32	15	14	12	9	9
	0	13	13	28	11	10	11	9	8
	+ 2250	11	17	33	17	14	13	10	9
54	- 2250	15	20	37	18	16	14	11	10
	0	14	14	32	12	11	13	12	10
	+ 2250	13	18	36	19	16	15	13	11
66	- 2250	16	20	42	20	18	16	13	11
	0	16	15	34	13	12	15	14	11
	+ 2250	14	19	39	20	19	18	16	14
78	- 2250	16	20	47	22	21	18	15	12
	0	17	15	37	14	13	17	17	13
	+ 2250	16	20	42	22	21	20	19	16

Pressure Drop (PD)

Pressure drops are reported in accordance with ASTM E477 methods and are based upon **ideal** flow conditions (5 diameters of straight duct on silencer inlet and 10 on outlet). Less than ideal conditions will result in an increase in pressure drop due to System Effects. See Silencer System Effects Data.

Duct Connect. Size (in.)	B x B (in.)	Silencer Length (in.)	Weight (lbs)	Face Velocity (ft. per min) / Pressure Drop (in.w.g.)						
				1250	1500	1750	2000	2250	2500	2750
10	30x30	42	125	0.09	0.13	0.17	0.23	0.28	0.35	0.43
		54	156	0.09	0.14	0.18	0.24	0.30	0.38	0.45
		66	185	0.10	0.14	0.20	0.26	0.32	0.40	0.48
		78	215	0.11	0.15	0.21	0.27	0.34	0.42	0.51

☐ Acceptable (0 - 0.35") ☐ Caution (>0.35") Pressure Drop may be too high for certain applications

Generated Noise (GN)

@ 0.55 sq.ft. face area

Length (in.)	Face Velocity (ft. per min)	Octave Band - Hz/Generated Noise (dB re 10^{-12} watts)							
		63	125	250	500	1000	2000	4000	8000
All	- 2250	56	53	51	49	51	52	50	39
	- 1750	55	51	46	45	45	44	39	35
	+ 1750	56	55	53	45	45	45	40	34
	+ 2250	59	60	59	51	50	53	52	40

CERTIFIED PERFORMANCE DATA

VIBRO-ACOUSTICS®
A Swegon Group company

10 CENM-HV-F2

Circular Elbow No-Media
High velocity silencer
(<2250 fpm)

How to Specify Example:

10 X **CENM-HV-F2** X **52**

- 10 — Duct Connection Size
- CENM-HV-F2 — Silencer Model
- 52 — Silencer Length

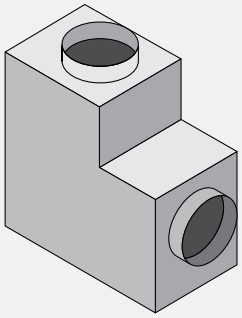

Insertion Loss (IL)

+ : "forward flow" where noise & airflow move in same direction (e.g. supply side)

- : "reverse flow" where noise & airflow move in opposite directions (e.g. return side)

See Silencer Selection Instructions.

Length (in.)	Face Velocity (ft. per min)	Octave Band - Hz/Dynamic Insertion Loss (dB)							
		63	125	250	500	1000	2000	4000	8000
52	- 2250	13	15	25	31	16	13	10	9
	0	10	10	23	21	11	11	10	9
	+ 2250	10	13	25	29	16	13	11	10
64	- 2250	14	16	27	32	17	14	11	8
	0	12	13	23	24	12	13	12	10
	+ 2250	11	16	27	32	18	15	13	12
76	- 2250	15	18	30	34	19	15	12	8
	0	13	15	22	26	14	14	13	11
	+ 2250	12	19	28	36	20	16	14	13
88	- 2250	16	19	32	36	21	16	13	8
	0	15	18	22	28	15	15	15	12
	+ 2250	14	22	29	40	22	17	16	14

Pressure Drop (PD)

Pressure drops are reported in accordance with ASTM E477 methods and are based upon **ideal** flow conditions (5 diameters of straight duct on silencer inlet and 10 on outlet). Less than ideal conditions will result in an increase in pressure drop due to System Effects. See Silencer System Effects Data.

Duct Connect. Size (in.)	B x B (in.)	Silencer Length (in.)	Weight (lbs)	Face Velocity (ft. per min) / Pressure Drop (in.w.g.)						
				1250	1500	1750	2000	2250	2500	2750
10	20x20	52	78	0.07	0.10	0.13	0.18	0.22	0.27	0.33
		64	97	0.08	0.12	0.16	0.21	0.26	0.32	0.39
		76	115	0.09	0.14	0.18	0.24	0.30	0.38	0.45
		88	134	0.11	0.15	0.21	0.27	0.34	0.43	0.52

☐ Acceptable (0 - 0.35") ☐ Caution (>0.35") Pressure Drop may be too high for certain applications

Generated Noise (GN)

@ 0.55 sq.ft. face area

Length (in.)	Face Velocity (ft. per min)	Octave Band - Hz/Generated Noise (dB re 10^{-12} watts)							
		63	125	250	500	1000	2000	4000	8000
All	- 2250	56	54	50	50	50	52	49	39
	- 1750	54	51	45	45	45	44	38	34
	+ 1750	53	53	51	51	44	45	38	33
	+ 2250	57	60	57	57	50	54	52	41

12 CENM-HV-F1

Circular Elbow No-Media
High velocity silencer
(<2250 fpm)

How to Specify Example:

12 X **CENM-HV-F1** X **42**

- 12 — Duct Connection Size
- CENM-HV-F1 — Silencer Model
- 42 — Silencer Length

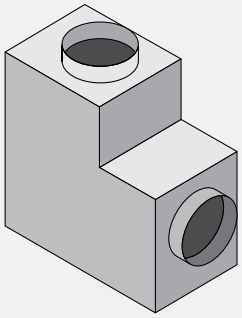

Insertion Loss (IL)

+ : "forward flow" where noise & airflow move in same direction (e.g. supply side)

- : "reverse flow" where noise & airflow move in opposite directions (e.g. return side)

See Silencer Selection Instructions.

Length (in.)	Face Velocity (ft. per min)	Octave Band - Hz/Dynamic Insertion Loss (dB)							
		63	125	250	500	1000	2000	4000	8000
42	- 2250	13	17	26	15	14	11	8	10
	0	11	12	22	9	10	9	7	7
	+ 2250	11	16	28	16	14	11	8	8
54	- 2250	14	17	33	18	16	13	10	10
	0	12	11	27	10	10	11	10	9
	+ 2250	12	16	33	18	16	14	11	10
66	- 2250	15	18	41	21	18	15	12	10
	0	13	11	32	11	11	14	14	10
	+ 2250	13	15	38	20	18	16	15	12
78	- 2250	16	18	48	24	21	17	14	11
	0	14	11	38	12	11	16	17	12
	+ 2250	13	15	44	22	20	19	18	15

Pressure Drop (PD)

Pressure drops are reported in accordance with ASTM E477 methods and are based upon **ideal** flow conditions (5 diameters of straight duct on silencer inlet and 10 on outlet). Less than ideal conditions will result in an increase in pressure drop due to System Effects. See Silencer System Effects Data.

Duct Connect. Size (in.)	B x B (in.)	Silencer Length (in.)	Weight (lbs)	Face Velocity (ft. per min) / Pressure Drop (in.w.g.)						
				1250	1500	1750	2000	2250	2500	2750
12	30x30	42	128	0.09	0.14	0.18	0.24	0.30	0.38	0.45
		54	158	0.11	0.15	0.21	0.27	0.34	0.42	0.51
		66	188	0.12	0.17	0.23	0.30	0.38	0.47	0.57
		78	219	0.13	0.19	0.25	0.33	0.42	0.52	0.62

☐ Acceptable (0 - 0.35") ☐ Caution (>0.35") Pressure Drop may be too high for certain applications

Generated Noise (GN)

@ 0.79 sq.ft. face area

Length (in.)	Face Velocity (ft. per min)	Octave Band - Hz/Generated Noise (dB re 10^{-12} watts)							
		63	125	250	500	1000	2000	4000	8000
All	- 2250	58	56	54	52	53	56	55	42
	- 1750	57	53	49	46	45	46	44	38
	+ 1750	57	58	54	46	45	47	44	38
	+ 2250	60	62	61	52	51	56	57	42

12 CENM-HV-F2

Circular Elbow No-Media
High velocity silencer
(<2250 fpm)

How to Specify Example:

12 X **CENM-HV-F2** X **52**

- 12 — Duct Connection Size
- CENM-HV-F2 — Silencer Model
- 52 — Silencer Length

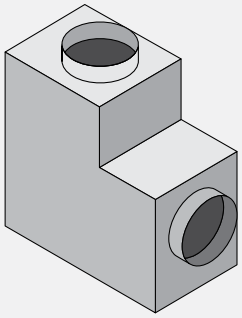

Insertion Loss (IL)

+ : "forward flow" where noise & airflow move in same direction (e.g. supply side)

- : "reverse flow" where noise & airflow move in opposite directions (e.g. return side)

See Silencer Selection Instructions.

Length (in.)	Face Velocity (ft. per min)	Octave Band - Hz/Dynamic Insertion Loss (dB)							
		63	125	250	500	1000	2000	4000	8000
52	- 2250	11	12	20	29	16	13	10	8
	0	6	8	17	21	11	11	9	9
	+ 2250	7	10	20	30	16	12	10	9
64	- 2250	13	14	23	32	18	14	11	9
	0	8	10	18	24	12	12	10	9
	+ 2250	8	13	22	33	18	13	11	10
76	- 2250	14	16	26	36	20	15	12	10
	0	10	12	19	26	13	12	11	9
	+ 2250	9	15	24	37	20	14	12	11
88	- 2250	15	18	29	39	21	15	13	11
	0	12	13	20	28	15	13	12	9
	+ 2250	10	18	27	41	22	15	14	11

Pressure Drop (PD)

Pressure drops are reported in accordance with ASTM E477 methods and are based upon **ideal** flow conditions (5 diameters of straight duct on silencer inlet and 10 on outlet). Less than ideal conditions will result in an increase in pressure drop due to System Effects. See Silencer System Effects Data.

Duct Connect. Size (in.)	B x B (in.)	Silencer Length (in.)	Weight (lbs)	Face Velocity (ft. per min) / Pressure Drop (in.w.g.)						
				1250	1500	1750	2000	2250	2500	2750
12	20x20	52	80	0.06	0.08	0.11	0.15	0.19	0.23	0.28
		64	99	0.08	0.12	0.16	0.21	0.27	0.33	0.40
		76	119	0.11	0.15	0.21	0.27	0.34	0.42	0.51
		88	138	0.13	0.19	0.25	0.33	0.42	0.52	0.62

☐ Acceptable (0 - 0.35") ☐ Caution (>0.35") Pressure Drop may be too high for certain applications

Generated Noise (GN)

@ 0.79 sq.ft. face area

Length (in.)	Face Velocity (ft. per min)	Octave Band - Hz/Generated Noise (dB re 10^{-12} watts)							
		63	125	250	500	1000	2000	4000	8000
All	- 2250	56	56	54	52	52	54	53	41
	- 1750	54	52	47	46	45	45	41	36
	+ 1750	53	54	51	46	44	46	41	34
	+ 2250	56	62	58	52	52	57	56	45

14 CENM-HV-F1

Circular Elbow No-Media
High velocity silencer
(<2250 fpm)

How to Specify Example:

14 X **CENM-HV-F1** X **36**

- **14** — Duct Connection Size
- **CENM-HV-F1** — Silencer Model
- **36** — Silencer Length

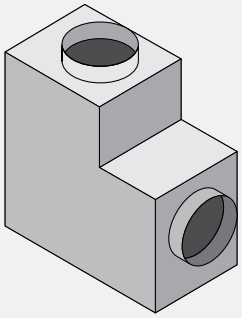

Insertion Loss (IL)

+ : "forward flow" where noise & airflow move in same direction (e.g. supply side)

- : "reverse flow" where noise & airflow move in opposite directions (e.g. return side)

See Silencer Selection Instructions.

Length (in.)	Face Velocity (ft. per min)	Octave Band - Hz/Dynamic Insertion Loss (dB)							
		63	125	250	500	1000	2000	4000	8000
36	- 2250	12	16	22	13	13	9	5	6
	0	8	11	17	9	9	8	6	6
	+ 2250	9	15	21	14	12	9	7	7
48	- 2250	12	18	30	16	15	11	7	7
	0	10	12	23	11	11	10	8	8
	+ 2250	10	17	29	16	14	11	9	8
60	- 2250	13	20	39	19	17	13	9	8
	0	11	13	29	13	12	12	10	9
	+ 2250	11	19	37	19	16	13	11	10
72	- 2250	14	22	48	22	19	15	10	9
	0	12	14	36	14	13	13	12	10
	+ 2250	12	22	44	22	18	15	13	11

Pressure Drop (PD)

Pressure drops are reported in accordance with ASTM E477 methods and are based upon **ideal** flow conditions (5 diameters of straight duct on silencer inlet and 10 on outlet). Less than ideal conditions will result in an increase in pressure drop due to System Effects. See Silencer System Effects Data.

Duct Connect. Size (in.)	B x B (in.)	Silencer Length (in.)	Weight (lbs)	Face Velocity (ft. per min) / Pressure Drop (in.w.g.)						
				1250	1500	1750	2000	2250	2500	2750
14	36x36	36	164	0.07	0.10	0.13	0.18	0.22	0.27	0.33
		48	202	0.07	0.10	0.14	0.19	0.24	0.29	0.35
		60	241	0.08	0.11	0.15	0.20	0.25	0.31	0.37
		72	279	0.08	0.12	0.16	0.21	0.26	0.32	0.39

☐ Acceptable (0 - 0.35") ☐ Caution (>0.35") Pressure Drop may be too high for certain applications

Generated Noise (GN)

@ 1.07 sq.ft. face area

Length (in.)	Face Velocity (ft. per min)	Octave Band - Hz/Generated Noise (dB re 10^{-12} watts)							
		63	125	250	500	1000	2000	4000	8000
All	- 2250	60	58	58	56	58	61	60	50
	- 1750	57	54	50	49	48	49	46	42
	+ 1750	59	60	54	48	47	48	46	41
	+ 2250	62	65	62	56	55	60	60	50

CERTIFIED PERFORMANCE DATA

VIBRO-ACOUSTICS®
A Swegon Group company

14 CENM-HV-F2

Circular Elbow No-Media
High velocity silencer
(<2250 fpm)

How to Specify Example:

14 X **CENM-HV-F2** X **48**

- 14: Duct Connection Size
- CENM-HV-F2: Silencer Model
- 48: Silencer Length

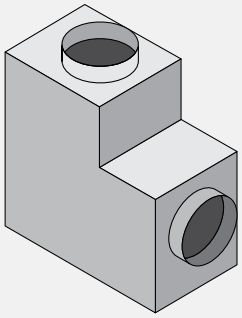

Insertion Loss (IL)

+ : "forward flow" where noise & airflow move in same direction (e.g. supply side)

- : "reverse flow" where noise & airflow move in opposite directions (e.g. return side)

See Silencer Selection Instructions.

Length (in.)	Face Velocity (ft. per min)	Octave Band - Hz/Dynamic Insertion Loss (dB)							
		63	125	250	500	1000	2000	4000	8000
48	- 2250	8	9	18	24	15	10	6	5
	0	5	7	15	16	10	9	7	7
	+ 2250	6	9	18	22	15	11	8	7
60	- 2250	11	12	21	25	16	12	7	6
	0	7	8	17	17	11	11	9	8
	+ 2250	8	11	20	24	16	12	9	9
72	- 2250	13	14	24	27	17	13	9	8
	0	10	10	19	19	12	12	10	9
	+ 2250	10	13	22	27	17	13	11	10
84	- 2250	15	17	27	28	18	15	10	9
	0	12	11	22	20	13	13	11	10
	+ 2250	12	15	25	29	17	15	12	11

Pressure Drop (PD)

Pressure drops are reported in accordance with ASTM E477 methods and are based upon **ideal** flow conditions (5 diameters of straight duct on silencer inlet and 10 on outlet). Less than ideal conditions will result in an increase in pressure drop due to System Effects. See Silencer System Effects Data.

Duct Connect. Size (in.)	B x B (in.)	Silencer Length (in.)	Weight (lbs)	Face Velocity (ft. per min) / Pressure Drop (in.w.g.)						
				1250	1500	1750	2000	2250	2500	2750
14	24x24	48	100	0.06	0.09	0.12	0.15	0.20	0.24	0.29
		60	124	0.08	0.11	0.15	0.20	0.25	0.31	0.37
		72	148	0.09	0.13	0.18	0.24	0.30	0.37	0.45
		84	172	0.11	0.16	0.21	0.28	0.35	0.44	0.53

☐ Acceptable (0 - 0.35") ☐ Caution (>0.35") Pressure Drop may be too high for certain applications

Generated Noise (GN)

@ 1.07 sq.ft. face area

Length (in.)	Face Velocity (ft. per min)	Octave Band - Hz/Generated Noise (dB re 10^{-12} watts)							
		63	125	250	500	1000	2000	4000	8000
All	- 2250	59	60	56	52	54	57	56	45
	- 1750	58	56	49	46	48	48	44	40
	+ 1750	58	60	53	47	48	50	46	41
	+ 2250	61	68	61	54	55	61	62	51

CERTIFIED PERFORMANCE DATA

VIBRO-ACOUSTICS®
A Swegon Group company

16 CENM-HV-F1

Circular Elbow No-Media
High velocity silencer
(<2250 fpm)

How to Specify Example:

16 X **CENM-HV-F1** X **36**

- 16 — Duct Connection Size
- CENM-HV-F1 — Silencer Model
- 36 — Silencer Length

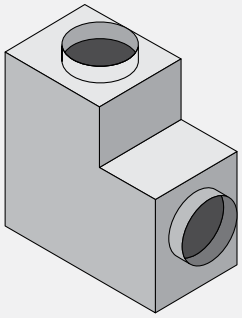

Insertion Loss (IL)

+ : "forward flow" where noise & airflow move in same direction (e.g. supply side)

- : "reverse flow" where noise & airflow move in opposite directions (e.g. return side)

See Silencer Selection Instructions.

Length (in.)	Face Velocity (ft. per min)	Octave Band - Hz/Dynamic Insertion Loss (dB)							
		63	125	250	500	1000	2000	4000	8000
36	- 2250	10	14	17	12	12	7	2	2
	0	6	11	11	9	9	7	5	5
	+ 2250	8	14	14	12	11	8	6	6
48	- 2250	11	18	28	15	14	9	4	4
	0	7	13	19	11	11	8	6	7
	+ 2250	9	19	25	15	13	9	6	6
60	- 2250	12	22	38	18	15	10	5	5
	0	9	15	26	14	13	10	7	8
	+ 2250	10	23	35	18	15	10	7	7
72	- 2250	12	25	48	20	17	12	6	7
	0	10	17	34	17	16	11	8	9
	+ 2250	12	28	45	22	17	11	8	8

Pressure Drop (PD)

Pressure drops are reported in accordance with ASTM E477 methods and are based upon **ideal** flow conditions (5 diameters of straight duct on silencer inlet and 10 on outlet). Less than ideal conditions will result in an increase in pressure drop due to System Effects. See Silencer System Effects Data.

Duct Connect. Size (in.)	B x B (in.)	Silencer Length (in.)	Weight (lbs)	Face Velocity (ft. per min) / Pressure Drop (in.w.g.)						
				1250	1500	1750	2000	2250	2500	2750
16	36x36	36	167	0.04	0.06	00.9	0.11	0.14	0.17	0.21
		48	205	0.04	0.06	0.08	0.10	0.13	0.16	0.19
		60	244	0.04	0.05	0.07	0.09	0.12	0.14	0.17
		72	283	0.03	0.05	0.06	0.08	0.10	0.13	0.15

☐ Acceptable (0 - 0.35") ☐ Caution (>0.35") Pressure Drop may be too high for certain applications

Generated Noise (GN)

@ 1.40 sq.ft. face area

Length (in.)	Face Velocity (ft. per min)	Octave Band - Hz/Generated Noise (dB re 10^{-12} watts)							
		63	125	250	500	1000	2000	4000	8000
All	- 2250	66	63	64	65	68	73	72	65
	- 1750	58	55	51	54	55	54	51	49
	+ 1750	62	62	53	53	51	51	48	48
	+ 2250	67	73	64	64	64	68	66	65

16 CENM-HV-F2

Circular Elbow No-Media
High velocity silencer
(<2250 fpm)

How to Specify Example:

16 X **CENM-HV-F2** X **48**

- 16 — Duct Connection Size
- CENM-HV-F2 — Silencer Model
- 48 — Silencer Length

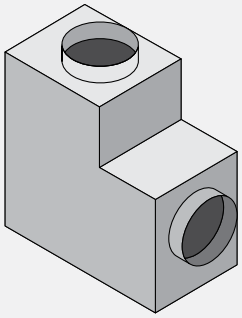

Insertion Loss (IL)

+ : "forward flow" where noise & airflow move in same direction (e.g. supply side)

- : "reverse flow" where noise & airflow move in opposite directions (e.g. return side)

See Silencer Selection Instructions.

Length (in.)	Face Velocity (ft. per min)	Octave Band - Hz/Dynamic Insertion Loss (dB)							
		63	125	250	500	1000	2000	4000	8000
48	- 2250	5	6	16	18	13	7	2	3
	0	4	5	14	10	9	8	6	6
	+ 2250	6	7	16	15	14	9	6	6
60	- 2250	8	9	19	18	14	10	4	4
	0	6	7	17	11	19	10	7	8
	+ 2250	8	8	18	16	14	11	8	7
72	- 2250	12	12	22	18	14	12	6	5
	0	9	8	20	12	10	11	9	10
	+ 2250	11	10	20	16	13	13	9	9
84	- 2250	15	15	25	18	15	15	8	6
	0	12	9	23	13	10	13	10	12
	+ 2250	13	11	22	16	12	15	11	11

Pressure Drop (PD)

Pressure drops are reported in accordance with ASTM E477 methods and are based upon **ideal** flow conditions (5 diameters of straight duct on silencer inlet and 10 on outlet). Less than ideal conditions will result in an increase in pressure drop due to System Effects. See Silencer System Effects Data.

Duct Connect. Size (in.)	B x B (in.)	Silencer Length (in.)	Weight (lbs)	Face Velocity (ft. per min) / Pressure Drop (in.w.g.)						
				1250	1500	1750	2000	2250	2500	2750
16	24x24	48	102	0.06	0.09	0.12	0.16	0.20	0.25	0.30
		60	127	0.07	0.10	0.14	0.18	0.23	0.29	0.35
		72	152	0.08	0.12	0.16	0.21	0.26	0.32	0.39
		84	177	0.09	0.13	0.18	0.23	0.29	0.36	0.43

☐ Acceptable (0 - 0.35") ☐ Caution (>0.35") Pressure Drop may be too high for certain applications

Generated Noise (GN)

@ 1.40 sq.ft. face area

Length (in.)	Face Velocity (ft. per min)	Octave Band - Hz/Generated Noise (dB re 10^{-12} watts)							
		63	125	250	500	1000	2000	4000	8000
All	- 2250	66	67	61	52	59	62	64	54
	- 1750	64	63	54	46	52	53	52	49
	+ 1750	67	72	59	50	55	57	58	54
	+ 2250	70	80	66	56	62	68	73	65

VIBRO-ACOUSTICS®
A Swegon Group company

RED REFL RENM

Rectangular Elbow silencers

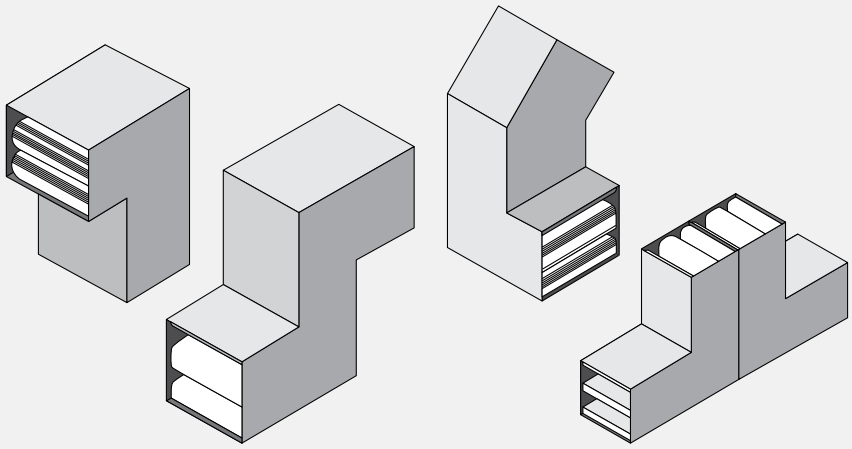

Description

VIBRO-ACOUSTICS' RED (Rectangular Elbow Dissipative), REFL (Rectangular Elbow Film Lined) and RENM (Rectangular Elbow No-Media) silencers incorporate a full 90 degree and/or a partial bend to fit the duct system configuration. RED silencers use acoustic grade glass fiber protected by perforated metal. REFL silencers incorporate a film liner between the perforated metal and the glass fiber. RENM silencers do not use glass fiber and are completely void of any fill material.

Splitters, sometimes called baffles, are aerodynamically designed to turn the air efficiently and minimize pressure drop. They vary in quantity and thickness, and air passages also vary in size.

Applications

> When there is not enough space for straight silencers (straight silencers should not be located within three diameters of duct elbows or bends)

> In supply, return or exhaust ductwork

> In fan plenums and air handling units (both supply and return)

> On the receiver side of valves, dampers, terminal boxes, etc.

> Economical substitution for acoustically lined duct

Features and Benefits

> Allows silencing when space does not permit the use of straight silencers
> Aerodynamic splitters and specially designed air passage ways efficiently turn the air for minimum pressure drop
> Multiple configurations available such as
> "T" shaped (two 90 degree Elbows back-to-back)
> "Y" shaped (two greater than 90 degree Elbows back-to-back)
> "T-Shirt" shaped (two less than 90 degree Elbows back-to-back)
> "Z" shaped (two Elbows of any angle in series)
> Available in any cross-sectional dimensions to "fit-the-duct"
> Modular unit sizes to fit ducts and air handling units without using transitions or large blank-off sections
> Can be selected to suit the acoustic, space, or energy-cost requirements
> Construction quality and aerodynamic design optimized to give reliable performance, more acoustics, lower pressure drop and lower overall cost
> Available in Dissipative (RED), Film Lined (REFL) and No-Media (RENM) options
> When break-out noise is of prime concern RED, REFL and RENM silencers may be appropriate selections. They may require mass/stiffness added to their outer casing (see HTL Silencers)

Cautions/When Not to Use RED, REFL and RENM Silencers

> When there is enough straight duct length to effectively use straight silencers

Performance Data/Testing

See RED, REFL, RENM Performance Data section. Vibro-Acoustics' 5th generation aero-acoustic laboratory was the first laboratory to be NVLAP accredited (Lab Code 100424-0) for the ASTM E-477 silencer test code. NVLAP is administered by the U.S. Dept. of Commerce.

Silencer Selection and Location

Elbow Silencers are not built up of standard modules like rectangular straight silencers. For elbow silencers, the outside to inside length ratio increases with the turning radius. Whereas for straight silencers the internal geometry is identical when silencer modules are combined. Therefore, Elbow Silencers need to be carefully selected to optimize performance. Call **1-800-565-8401** for custom selections by our Application Engineers.

Special Construction Options

> Heavier gauge casings and perforated metal
> Continuously welded casings
> Special materials (e.g. stainless steel, aluminum)
> Flanges
> Access doors
> Media protection: glass fiber cloth
> High transmission loss (HTL) casings to prevent break-out/break-in noise
> Built in transitions
> Removable splitters
> Flow measuring stations
> For details of above and more special options see Special Construction Options.

Standard Construction Features

RED

> Galvanized, lockformed casing constructed to SMACNA standards
> 2” slip connection at each end
> Aerodynamically shaped, galvanized nose at inlet
> Galvanized gap plates between splitters to ensure close dimensional tolerances at air passages
> Perforated galvanized splitters complete with perforated diffuser tail sections
> Splitters filled with acoustic grade glass fiber under minimum 15% compression

REFL

> Galvanized, lockformed casing constructed to SMACNA standards
> 2” slip connection at each end
> Aerodynamically shaped, galvanized nose at inlet
> Galvanized gap plates between splitters to ensure close dimensional tolerances at air passages
> Perforated galvanized splitters complete with perforated diffuser tail sections
> Splitters filled with acoustic grade glass fiber under minimum 15% compression
> Glass fiber carefully wrapped in Vibar™ film with lap joints away from splitter to reduce potential tearing of the Vibar™
> 0.5 inch deep corrugated honeycomb “stand-off” spacer sheet placed between the perforated metal and the film

RENM

> Galvanized, lockformed casing constructed to SMACNA standards
> 2” slip connection at each end
> Aerodynamically shaped, galvanized nose at inlet
> Special “tuned” perforated galvanized splitters complete with perforated diffuser tail sections
> Splitters configured with internal “tuned” chambers
> No acoustical media

VIBRO-ACOUSTICS®
A Swegon Group company

TD
TFL
TNM

Transitional Silencers

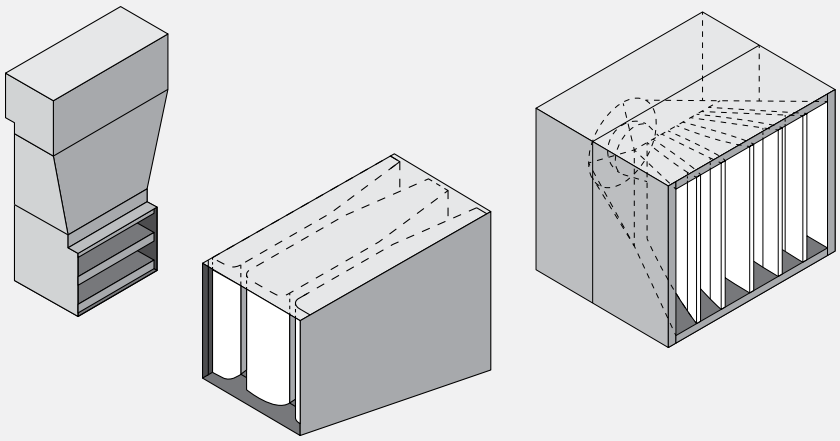

Description

VIBRO-ACOUSTICS' TD (Transitional Dissipative), TFL (Transitional Film Lined) and TNM (Transitional No-Media) silencers incorporate a transition(s) to optimally fit the duct system configuration. The transition(s) is integral to the silencer and may be in any plane. The silencers' splitters and air passages are custom designed to minimize pressure drop.

TD, TFL and TNM silencers can be straight or incorporate Elbows and HTL casings if necessary.

Applications

> Where system ductwork transitions exist at optimal or needed silencer locations

> Where controlled airflow expansions or contractions are desired

> Where varying airflow splits are required

> In supply, return or exhaust ductwork

> In fan plenums and air handling units (both supply and return)

> On the receiver side of valves, dampers, terminal boxes, etc.

Features and Benefits

> Allows silencing when the duct system shape does not permit the use of standard silencers

> Controlled aerodynamic acceleration or deceleration of the airflow through special splitter and air passage design

> Custom configurations available such as

  > Transitioning straight silencer

  > Round or oval to rectangular (or vice-versa) transitioning silencer

  > Transitioning Elbow Silencer

> Available in any cross-sectional dimensions to "fit-the-duct"

> One-piece or sectional supply for ease of installation

> Can be selected to suit the acoustic, space, or energy-cost requirements

> Construction quality and aerodynamic design optimized to give reliable performance, best acoustics, lowest pressure drop and lowest overall cost

> Available in Dissipative (TD), Film Lined (TFL) and NoMedia (TNM) options

> When break-out noise is of prime concern TD, TFL and TNM silencers may be appropriate selections. They may require mass/stiffness added to their outer casing. Refer to Silencer Selection Instructions for proper silencer location.

Cautions/When Not to Use TD, TFL AND TNM Silencers

> When there is enough space to properly fit standard silencers

Performance Data/Testing

See TD, TFL, and TNM Performance Data section. Vibro-Acoustics' 5th generation aero-acoustic laboratory was the first laboratory to be NVLAP accredited (Lab Code 100424-0) for the ASTM E-477 silencer test code. NVLAP is administered by the U.S. Dept. of Commerce.

Silencer Selection and Location

Vibro-Acoustics' Transitional Silencers need to be carefully selected to optimize performance. Call **1-800-565-8401** for custom selections by our application engineers.

Special Construction Options

> Heavier gauge casings and perforated metal

> Continuously welded casings

> Special materials (e.g. stainless steel, aluminum)

> Flanges

> Access doors

> Media protection: glass fiber cloth

> High transmission loss (htl) casings to prevent

> Break-out/break-in noise

> Removable splitters

> Flow measuring stations

> For details of above and more special options see Special Construction Options.

Standard Construction Features

TD

> Galvanized, lockformed casing constructed to SMACNA standards
> 2” slip connection at each end
> Aerodynamically shaped, galvanized nose at inlet
> Perforated galvanized splitters complete with perforated diffuser tail sections
> Splitters filled with acoustic grade glass fiber under minimum 15% compression

TFL

> Galvanized, lockformed casing constructed to SMACNA standards
> 2” slip connection at each end
> Aerodynamically shaped, galvanized nose at inlet
> Perforated galvanized splitters complete with perforated diffuser tail sections
> Splitters filled with acoustic grade glass fiber under minimum 15% compression
> Glass fiber carefully wrapped in Tedlar film with lap joints away from splitter to reduce potential tearing of the Tedlar
> 0.5 inch deep corrugated honeycomb “stand-off” spacer sheet placed between the perforated metal and the film

TNM

> Galvanized, lockformed casing constructed to SMACNA standards
> 2” slip connection at each end
> Aerodynamically shaped, galvanized nose at inlet
> Special “tuned” perforated galvanized splitters complete with perforated diffuser tail sections
> Splitters configured with internal “tuned” chambers
> No acoustical media

HVAC SILENCERS FILM-LINED

RFL

Rectangular
Film Lined
Straight Silencers

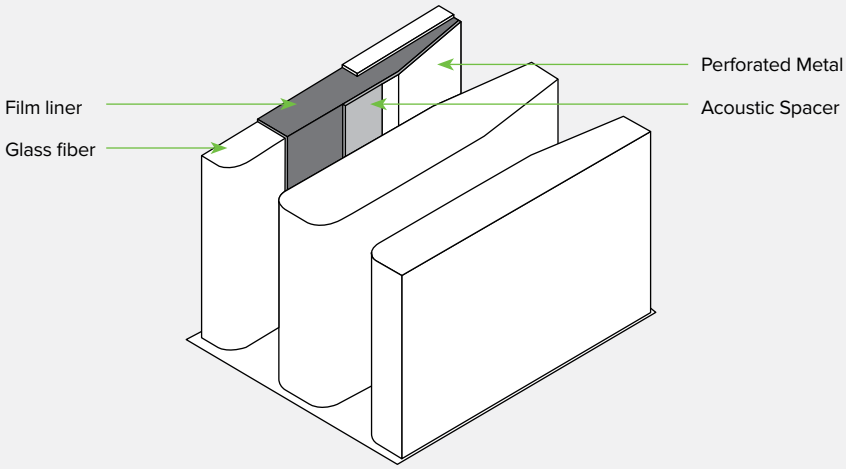

Description

VIBRO-ACOUSTICS' RFL SILENCERS use acoustic grade glass fiber as the principal sound-absorbing mechanism. Rectangular models utilize acoustical splitters, sometimes called baffles. Perforated metal and a Vibar™ film liner rotects the glass fiber from erosion by the airflow. The glass fiber is also protected against contamination from elements in the airstream.

An acoustical spacer between the film liner and the perforated metal helps reduce the acoustic performance degradation caused |by the film liner.

Splitters in rectangular models vary in quantity and thickness, and air passages also vary in width. The splitters are aerodynamically shaped to minimize pressure drop.

Model Names

Vibro-Acoustics' silencer model names are coded to help identify their recommended application range.

*The lower the Frequency Indicator, the better the silencer's insertion loss in the low frequency range. The higher the Frequency Indicator, the better the silencer's insertion loss in the mid to high frequency ranges.

Rectangular RFL - ____ - ____

Silencer Type

Velocity Range
ULV, LV, MV, HV, UHV

Frequency Indicator*
F1, F2, F3, F4, F5, F6, F7, F8, F9

Applications

> Wherever glass fiber is not desirable in direct contact with the airstream (e.g. health care, laboratory and clean room applications etc.)
> In supply, return and exhaust ductwork
> In fan plenums and air handling units (both supply and return)
> On cooling towers, air-cooled chillers, etc.
> On the receiver side of valves, dampers, terminal boxes, etc.
> Normal recommended duct velocity range

RFL-ULV	0-500 fpm	RFL-HV	1250-2000 fpm
RFL-LV	0-750 fpm	RFL-UHV	2000-2500 fpm
RFL-MV	750-1250 fpm		

For velocities in excess of the RFL-UHV range see the EX Model and RLP Silencers.

Features and Benefits

> Greatly reduces the potential for glass fiber particles to enter the airstream, especially in health care applications

> Prevents contamination sources from entering the silencer media

> Available in any cross-sectional dimensions to "fit-the-duct"

> Modular unit sizes to fit ducts and air handling units without using transitions or large blank-off sections

> Standard rectangular silencer lengths available in 36, 60, 84 and 108"; custom lengths up to 144" at no cost premium

> Can be selected to suit the acoustic, space, or energy-cost requirements

> Construction quality and aerodynamic design optimized to give reliable performance, best acoustics, lowest pressure drop and lowest overall cost

> Splitters can be aligned vertically or horizontally to minimize extra pressure losses due to poor inlet or discharge flow conditions (e.g. near fans, elbows, etc.)

> When break-out noise is of prime concern RFL silencers may be appropriate selections. They may require mass/stiffness added to their outer casing. Refer to Silencer Selection Instructions for proper silencer location.

Cautions/When Not to Use RFL Silencers

> When 3-5 equivalent duct diameters of straight, unobstructed duct are not available on both the silencer's inlet or discharge; consider using Elbow Silencers, Transitional Silencers or Fan Silencers

> When velocities exceed 2500 fpm for RFL silencers, consider RLP Silencers or EX Silencers

> When no acoustical media whatsoever is acceptable in the airstream, consider No-Media Silencers

> The acoustic performance of RFL silencers is generally less than RD silencers. Longer lengths may be required to achieve the insertion loss required.

Performance Data/Testing

See Performance Data section.
Vibro-Acoustics' 5th generation aero-acoustic laboratory was the first laboratory to be NVLAP accredited (Lab Code 100424-0) for the ASTM E-477 silencer test code. NVLAP is administered by the U.S. Dept. of Commerce.

Silencer Selection and Location

Vibro-Acoustics offers multiple selection methods, from our complete analysis service to Do-It-Yourself quick selections. Refer to Silencer Selection Instructions for details.

Standard Construction Features

> Galvanized, lockformed casing constructed to SMACNA standards

> 2" slip connection at each end

> Aerodynamically shaped, galvanized nose at inlet

> Galvanized gap plates between splitters to ensure close dimensional tolerances at air passages

> Perforated galvanized splitters complete with perforated diffuser tail sections

> Splitters filled with acoustic grade glass fiber under minimum 15% compression

> Glass fiber carefully wrapped in Vibar™ film with lap joints away from splitter to reduce potential tearing of the Vibar™

> 0.5 inch deep corrugated honeycomb "stand-off" spacer sheet placed between the perforated metal and the film

Special Construction Options

> Heavier gauge casings and perforated metal; continuously welded casings; special materials (e.g. stainless steel, aluminum)

> Flanges; access doors

> High transmission loss (HTL) casings to prevent break-out/break-in noise;

> Built in transitions; removable splitters; flow measuring stations

> For details of above and more special options see Special Construction Options.

CERTIFIED PERFORMANCE DATA

VIBRO-ACOUSTICS®
A Swegon Group company

RFL-ULV-F1

Rectangular Film Lined
Ultra low velocity silencer
(<500 fpm)

How to Specify Example:

32 X **21** **RFL-ULV-F1** X **60**

Duct Width | Duct Height | Silencer Model | Silencer Length

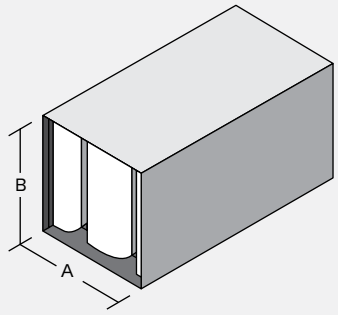

Insertion Loss (IL)

+ : "forward flow" where noise & airflow move in same direction (e.g. supply side)

- : "reverse flow" where noise & airflow move in opposite directions (e.g. return side)

See Silencer Selection Instructions. DIL above 50dB may be limited due to noise flanking around the silencer or along the duct walls. If more than 50dB DIL is required, contact your local Vibro-Acoustics Representative or call **1-800-565-8401**.

Length (in.)	Face Velocity (ft. per min)	Octave Band - Hz/Dynamic Insertion Loss (dB)							
		63	125	250	500	1000	2000	4000	8000
36	- 500	10	14	15	14	22	25	19	12
	0	11	14	15	14	21	28	20	12
	+ 500	9	13	14	13	21	29	21	13
60	- 500	12	16	23	24	31	33	23	12
	0	12	15	22	23	30	35	26	14
	+ 500	11	15	22	23	30	35	27	15
84	- 500	14	17	31	34	40	41	28	13
	0	13	16	30	33	40	41	31	16
	+ 500	12	16	30	32	40	41	33	16
108	- 500	17	20	39	39	46	51	32	15
	0	15	19	37	41	49	49	37	19
	+ 500	14	19	37	39	46	50	39	19

Pressure Drop (PD)

Pressure drops are reported in accordance with ASTM E477 methods and are based upon **ideal** flow conditions (5 diameters of straight duct on silencer inlet and 10 on outlet). Less than ideal conditions will result in an increase in pressure drop due to System Effects. See Silencer System Effects Data.

Length (in.)	Face Velocity (ft. per min) / Pressure Drop (in.w.g.)						
	250	500	750	1000	1250	1500	1750
36	0.03	0.12	0.26	0.46	0.72	1.04	1.41
60	0.04	0.16	0.35	0.63	0.98	1.41	1.92
84	0.05	0.20	0.45	0.80	1.24	1.79	2.43
108	0.06	0.24	0.54	0.96	1.50	2.17	2.95

☐ Acceptable (0 - 0.35") ☐ Caution (>0.35") Pressure Drop may be too high for certain applications

Generated Noise (GN)

@ 5 sq.ft. face area

Length (in.)	Face Velocity (ft. per min)	Octave Band - Hz/Generated Noise (dB re 10^{-12} watts)							
		63	125	250	500	1K	2K	4K	8K
All	- 750	60	41	39	40	46	52	43	36
	- 500	56	43	34	36	40	39	29	34
	+ 500	62	41	38	36	34	27	26	34
	+ 750	59	46	44	44	43	40	36	35

GN correction chart at right must be used to correct GN to other face areas. →

Face Area (sq.ft.)	2.5	5	10	20	40	80
dB	-3	0	+3	+6	+9	+12

Cross Section Sizes*

"A" dimension (in.)
15-16
29-32
58-64
87-96
116-128
145-160
174-192
203-224
232-240

"B" dimension
ANY SIZE

Approx. weight
6.7 lbs/cu.ft.

See Rectangular Silencer Cross-Section Dimensions to ensure selection matches ductwork dimensions.

CERTIFIED PERFORMANCE DATA

VIBRO-ACOUSTICS®
A Swegon Group company

RFL-ULV-F2

Rectangular Film Lined
Ultra low velocity silencer
(<500 fpm)

How to Specify Example:

27 X **22** **RFL-ULV-F2** X **60**

Duct Width | Duct Height | Silencer Model | Silencer Length

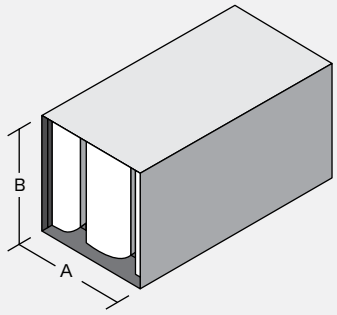

Insertion Loss (IL)

+ : "forward flow" where noise & airflow move in same direction (e.g. supply side)

- : "reverse flow" where noise & airflow move in opposite directions (e.g. return side)

See Silencer Selection Instructions. DIL above 50dB may be limited due to noise flanking around the silencer or along the duct walls. If more than 50dB DIL is required, contact your local Vibro-Acoustics Representative or call **1-800-565-8401**.

Length (in.)	Face Velocity (ft. per min)	Octave Band - Hz/Dynamic Insertion Loss (dB)							
		63	125	250	500	1000	2000	4000	8000
36	- 500	10	13	15	15	23	27	18	11
	0	11	13	14	15	22	29	19	12
	+ 500	10	12	14	14	22	29	20	12
60	- 500	12	15	23	25	32	35	23	12
	0	12	15	22	25	32	37	25	13
	+ 500	11	14	21	24	32	38	26	14
84	- 500	14	17	30	36	42	44	28	12
	0	13	16	30	35	42	46	32	15
	+ 500	12	16	29	34	42	47	33	16
108	- 500	16	20	37	39	46	55	33	14
	0	15	18	36	41	49	55	38	18
	+ 500	14	18	36	39	46	55	40	19

Pressure Drop (PD)

Pressure drops are reported in accordance with ASTM E477 methods and are based upon **ideal** flow conditions (5 diameters of straight duct on silencer inlet and 10 on outlet). Less than ideal conditions will result in an increase in pressure drop due to System Effects. See Silencer System Effects Data.

Length (in.)	Face Velocity (ft. per min) / Pressure Drop (in.w.g.)						
	250	500	750	1000	1250	1500	1750
36	0.03	0.11	0.26	0.45	0.71	1.02	1.39
60	0.04	0.15	0.34	0.61	0.95	1.37	1.86
84	0.05	0.20	0.44	0.78	1.22	1.76	2.39
108	0.06	0.22	0.50	0.90	1.40	2.01	2.74

☐ Acceptable (0 - 0.35") ☐ Caution (>0.35") Pressure Drop may be too high for certain applications

Generated Noise (GN)

@ 5 sq.ft. face area

Length (in.)	Face Velocity (ft. per min)	Octave Band - Hz/Generated Noise (dB re 10^{-12} watts)							
		63	125	250	500	1K	2K	4K	8K
All	- 750	59	43	41	42	47	52	43	36
	- 500	56	43	36	37	42	40	30	33
	+ 500	61	41	39	37	35	28	26	33
	+ 750	59	47	45	45	43	41	36	34

GN correction chart at right must be used to correct GN to other face areas. →

Face Area (sq.ft.)	2.5	5	10	20	40	80
dB	-3	0	+3	+6	+9	+12

Cross Section Sizes*

"A" dimension (in.)
14
27-28
54-57
81-86
108-115
135-144
162-173
189-202
216-231

"B" dimension
ANY SIZE

Approx. weight
6.7 lbs/cu.ft.

See Rectangular Silencer Cross-Section Dimensions to ensure selection matches ductwork dimensions.

CERTIFIED PERFORMANCE DATA

VIBRO-ACOUSTICS®
A Swegon Group company

RFL-ULV-F3

Rectangular Film Lined
Ultra low velocity silencer
(<500 fpm)

How to Specify Example:

25 X **21** **RFL-ULV-F3** X **60**

Duct Width | Duct Height | Silencer Model | Silencer Length

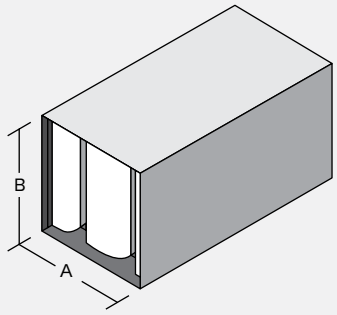

Insertion Loss (IL)

+ : "forward flow" where noise & airflow move in same direction (e.g. supply side)

- : "reverse flow" where noise & airflow move in opposite directions (e.g. return side)

See Silencer Selection Instructions. DIL above 50dB may be limited due to noise flanking around the silencer or along the duct walls. If more than 50dB DIL is required, contact your local Vibro-Acoustics Representative or call **1-800-565-8401**.

Length (in.)	Face Velocity (ft. per min)	Octave Band - Hz/Dynamic Insertion Loss (dB)							
		63	125	250	500	1000	2000	4000	8000
36	- 500	10	12	15	16	23	28	17	10
	0	11	12	14	16	23	29	18	11
	+ 500	10	11	14	15	23	30	19	11
60	- 500	12	14	22	27	34	38	22	11
	0	12	14	22	27	34	40	25	13
	+ 500	11	14	21	26	34	41	26	13
84	- 500	14	17	30	37	44	48	28	11
	0	13	16	29	37	44	51	32	14
	+ 500	12	16	28	37	44	52	34	15
108	- 500	16	19	36	39	46	55	34	14
	0	15	18	35	41	48	55	38	17
	+ 500	14	18	34	39	46	55	40	18

Pressure Drop (PD)

Pressure drops are reported in accordance with ASTM E477 methods and are based upon **ideal** flow conditions (5 diameters of straight duct on silencer inlet and 10 on outlet). Less than ideal conditions will result in an increase in pressure drop due to System Effects. See Silencer System Effects Data.

Length (in.)	Face Velocity (ft. per min) / Pressure Drop (in.w.g.)						
	250	500	750	1000	1250	1500	1750
36	0.03	0.11	0.25	0.45	0.70	1.01	1.37
60	0.04	0.15	0.33	0.59	0.92	1.33	1.80
84	0.05	0.19	0.43	0.77	1.20	1.72	2.34
108	0.05	0.21	0.47	0.83	1.29	1.86	2.53

☐ Acceptable (0 - 0.35") ☐ Caution (>0.35") Pressure Drop may be too high for certain applications

Generated Noise (GN)

@ 5 sq.ft. face area

Length (in.)	Face Velocity (ft. per min)	Octave Band - Hz/Generated Noise (dB re 10^{-12} watts)							
		63	125	250	500	1K	2K	4K	8K
All	- 750	58	44	43	43	48	52	43	35
	- 500	55	44	39	39	43	42	30	33
	+ 500	59	41	40	37	35	28	26	32
	+ 750	59	48	46	45	43	41	37	34

GN correction chart at right must be used to correct GN to other face areas. →

Face Area (sq.ft.)	2.5	5	10	20	40	80
dB	-3	0	+3	+6	+9	+12

Cross Section Sizes*

"A" dimension (in.)
13
25-26
50-53
75-80
100-107
125-134
150-161
175-188
200-215
225-240

"B" dimension
ANY SIZE

Approx. weight
6.8 lbs/cu.ft.

See Rectangular Silencer Cross-Section Dimensions to ensure selection matches ductwork dimensions.

CERTIFIED PERFORMANCE DATA

VIBRO-ACOUSTICS®
A Swegon Group company

RFL-ULV-F4

Rectangular Film Lined
Ultra low velocity silencer
(<500 fpm)

How to Specify Example:

47 X **22** **RFL-ULV-F4** X **60**

Duct Width | Duct Height | Silencer Model | Silencer Length

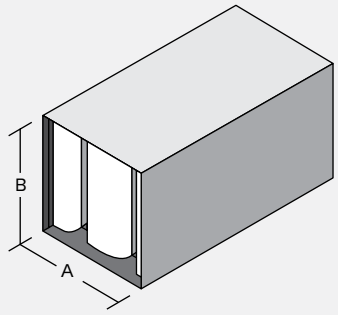

Insertion Loss (IL)

+ : "forward flow" where noise & airflow move in same direction (e.g. supply side)

- : "reverse flow" where noise & airflow move in opposite directions (e.g. return side)

See Silencer Selection Instructions. DIL above 50dB may be limited due to noise flanking around the silencer or along the duct walls. If more than 50dB DIL is required, contact your local Vibro-Acoustics Representative or call **1-800-565-8401**.

Length (in.)	Face Velocity (ft. per min)	Octave Band - Hz/Dynamic Insertion Loss (dB)							
		63	125	250	500	1000	2000	4000	8000
36	- 500	10	11	14	18	24	30	16	9
	0	11	11	14	17	24	30	17	10
	+ 500	10	11	13	17	24	31	18	10
60	- 500	12	14	22	28	35	40	22	10
	0	12	14	21	28	35	43	25	12
	+ 500	11	13	21	28	35	44	26	12
84	- 500	14	17	29	39	46	51	28	11
	0	13	16	28	40	47	55	33	14
	+ 500	13	15	28	39	46	55	34	14
108	- 500	15	19	35	39	46	55	35	13
	0	14	17	34	41	47	55	39	15
	+ 500	13	17	33	39	46	55	41	17

Pressure Drop (PD)

Pressure drops are reported in accordance with ASTM E477 methods and are based upon **ideal** flow conditions (5 diameters of straight duct on silencer inlet and 10 on outlet). Less than ideal conditions will result in an increase in pressure drop due to System Effects. See Silencer System Effects Data.

Length (in.)	Face Velocity (ft. per min) / Pressure Drop (in.w.g.)						
	250	500	750	1000	1250	1500	1750
36	0.03	0.11	0.25	0.44	0.69	0.99	1.35
60	0.04	0.14	0.32	0.57	0.89	1.28	1.75
84	0.05	0.19	0.42	0.75	1.17	1.69	2.30
108	0.05	0.19	0.43	0.76	1.19	1.71	2.33

☐ Acceptable (0 - 0.35") ☐ Caution (>0.35") Pressure Drop may be too high for certain applications

Generated Noise (GN)

@ 5 sq.ft. face area

Length (in.)	Face Velocity (ft. per min)	Octave Band - Hz/Generated Noise (dB re 10^{-12} watts)							
		63	125	250	500	1K	2K	4K	8K
All	- 750	57	45	45	45	48	53	44	35
	- 500	55	44	41	40	44	43	31	32
	+ 500	58	41	41	38	36	29	25	31
	+ 750	59	49	46	46	44	42	37	33

GN correction chart at right must be used to correct GN to other face areas. →

Face Area (sq.ft.)	2.5	5	10	20	40	80
dB	-3	0	+3	+6	+9	+12

Cross Section Sizes*

"A" dimension (in.)
12
23-24
46-49
69-74
92-99
115-124
138-149
161-174
184-199
207-224
230-240

"B" dimension
ANY SIZE

Approx. weight
6.9 lbs/cu.ft.

See Rectangular Silencer Cross-Section Dimensions to ensure selection matches ductwork dimensions.

CERTIFIED PERFORMANCE DATA

VIBRO-ACOUSTICS®
A Swegon Group company

RFL-ULV-F5

Rectangular Film Lined
Ultra low velocity silencer
(<500 fpm)

How to Specify Example:

44 X **22** **RFL-ULV-F5** X **60**

Duct Width	Duct Height	Silencer Model	Silencer Length

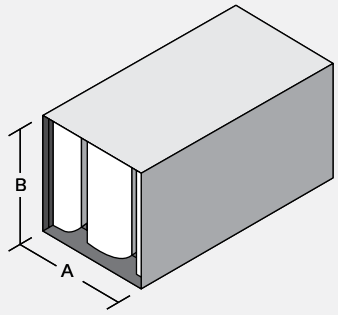

Insertion Loss (IL)

+ : "forward flow" where noise & airflow move in same direction (e.g. supply side)

- : "reverse flow" where noise & airflow move in opposite directions (e.g. return side)

See Silencer Selection Instructions. DIL above 50dB may be limited due to noise flanking around the silencer or along the duct walls. If more than 50dB DIL is required, contact your local Vibro-Acoustics Representative or call **1-800-565-8401**.

Length (in.)	Face Velocity (ft. per min)	Octave Band - Hz/Dynamic Insertion Loss (dB)							
		63	125	250	500	1000	2000	4000	8000
36	- 500	10	11	14	19	26	30	18	9
	0	10	10	14	18	25	31	19	10
	+ 500	9	10	13	17	25	31	20	10
60	- 500	12	14	21	29	37	41	25	10
	0	11	13	21	29	37	44	28	12
	+ 500	11	13	20	28	37	45	29	13
84	- 500	14	17	29	39	48	52	31	12
	0	13	16	28	40	48	55	36	14
	+ 500	12	15	27	39	48	55	37	15
108	- 500	16	20	35	40	48	55	39	14
	0	15	18	34	41	48	55	42	16
	+ 500	13	18	33	40	48	55	43	18

Pressure Drop (PD)

Pressure drops are reported in accordance with ASTM E477 methods and are based upon **ideal** flow conditions (5 diameters of straight duct on silencer inlet and 10 on outlet). Less than ideal conditions will result in an increase in pressure drop due to System Effects. See Silencer System Effects Data.

Length (in.)	Face Velocity (ft. per min) / Pressure Drop (in.w.g.)						
	250	500	750	1000	1250	1500	1750
36	0.03	0.12	0.26	0.47	0.73	1.06	1.44
60	0.04	0.15	0.34	0.60	0.94	1.36	1.85
84	0.05	0.19	0.44	0.78	1.22	1.75	2.38
108	0.05	0.20	0.46	0.82	1.27	1.83	2.50

☐ Acceptable (0 - 0.35") ☐ Caution (>0.35") Pressure Drop may be too high for certain applications

Generated Noise (GN)

@ 5 sq.ft. face area

Length (in.)	Face Velocity (ft. per min)	Octave Band - Hz/Generated Noise (dB re 10^{-12} watts)							
		63	125	250	500	1K	2K	4K	8K
All	- 750	57	46	46	46	49	53	44	35
	- 500	55	45	42	41	44	42	30	32
	+ 500	57	42	41	39	36	29	25	31
	+ 750	59	49	47	46	43	41	36	33

GN correction chart at right must be used to correct GN to other face areas. →

Face Area (sq.ft.)	2.5	5	10	20	40	80
dB	-3	0	+3	+6	+9	+12

Cross Section Sizes*

"A" dimension (in.)
11
21-22
42-45
63-68
84-91
105-114
126-137
147-160
168-183
189-206
210-229
231-240

"B" dimension
ANY SIZE

Approx. weight
6.7 lbs/cu.ft.

See Rectangular Silencer Cross-Section Dimensions to ensure selection matches ductwork dimensions.

CERTIFIED PERFORMANCE DATA

VIBRO-ACOUSTICS®
A Swegon Group company

RFL-ULV-F6

Rectangular Film Lined
Ultra low velocity silencer
(<500 fpm)

How to Specify Example:

40 X **21** **RFL-ULV-F6** X **60**

Duct Width | Duct Height | Silencer Model | Silencer Length

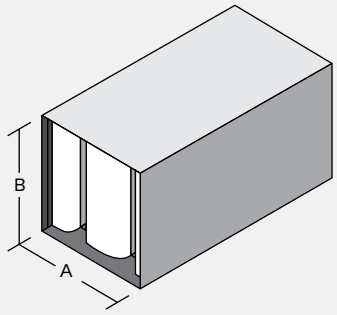

Insertion Loss (IL)

+ : "forward flow" where noise & airflow move in same direction (e.g. supply side)

- : "reverse flow" where noise & airflow move in opposite directions (e.g. return side)

See Silencer Selection Instructions. DIL above 50dB may be limited due to noise flanking around the silencer or along the duct walls. If more than 50dB DIL is required, contact your local Vibro-Acoustics Representative or call **1-800-565-8401**.

Length (in.)	Face Velocity (ft. per min)	Octave Band - Hz/Dynamic Insertion Loss (dB)							
		63	125	250	500	1000	2000	4000	8000
36	- 500	9	10	14	19	27	31	20	9
	0	9	9	13	18	27	32	22	10
	+ 500	8	9	13	18	27	32	22	10
60	- 500	11	14	21	29	38	43	27	11
	0	11	13	20	29	38	45	30	13
	+ 500	10	12	20	28	38	45	31	13
84	- 500	14	17	28	40	49	54	35	13
	0	13	16	27	40	50	55	39	15
	+ 500	12	15	26	39	49	55	40	16
108	- 500	16	21	35	40	49	55	42	15
	0	15	19	34	42	49	55	45	17
	+ 500	13	18	32	41	49	55	46	19

Pressure Drop (PD)

Pressure drops are reported in accordance with ASTM E477 methods and are based upon **ideal** flow conditions (5 diameters of straight duct on silencer inlet and 10 on outlet). Less than ideal conditions will result in an increase in pressure drop due to System Effects. See Silencer System Effects Data.

Length (in.)	Face Velocity (ft. per min) / Pressure Drop (in.w.g.)						
	250	500	750	1000	1250	1500	1750
36	0.03	0.13	0.28	0.50	0.78	1.13	1.53
60	0.04	0.16	0.36	0.64	0.99	1.43	1.95
84	0.05	0.20	0.45	0.81	1.26	1.82	2.47
108	0.05	0.22	0.49	0.87	1.36	1.96	2.66

☐ Acceptable (0 - 0.35") ☐ Caution (>0.35") Pressure Drop may be too high for certain applications

Generated Noise (GN)

@ 5 sq.ft. face area

Length (in.)	Face Velocity (ft. per min)	Octave Band - Hz/Generated Noise (dB re 10^{-12} watts)							
		63	125	250	500	1K	2K	4K	8K
All	- 750	57	47	47	47	49	53	44	36
	- 500	55	45	42	42	44	42	30	32
	+ 500	57	43	42	40	36	28	25	31
	+ 750	59	50	47	46	43	41	35	33

GN correction chart at right must be used to correct GN to other face areas. →

Face Area (sq.ft.)	2.5	5	10	20	40	80
dB	-3	0	+3	+6	+9	+12

Cross Section Sizes*

"A" dimension (in.)
10
19-20
38-41
57-62
76-83
95-104
114-125
133-146
152-167
171-188
190-240

"B" dimension
ANY SIZE

Approx. weight
6.8 lbs/cu.ft.

See Rectangular Silencer Cross-Section Dimensions to ensure selection matches ductwork dimensions.

CERTIFIED PERFORMANCE DATA

VIBRO-ACOUSTICS®
A Swegon Group company

RFL-ULV-F7

Rectangular Film Lined
Ultra low velocity silencer
(<500 fpm)

How to Specify Example:

37 X **21** **RFL-ULV-F7** X **60**

Duct Width | Duct Height | Silencer Model | Silencer Length

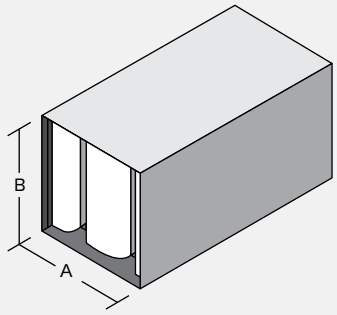

Insertion Loss (IL)

+ : "forward flow" where noise & airflow move in same direction (e.g. supply side)

- : "reverse flow" where noise & airflow move in opposite directions (e.g. return side)

See Silencer Selection Instructions. DIL above 50dB may be limited due to noise flanking around the silencer or along the duct walls. If more than 50dB DIL is required, contact your local Vibro-Acoustics Representative or call **1-800-565-8401**.

Length (in.)	Face Velocity (ft. per min)	Octave Band - Hz/Dynamic Insertion Loss (dB)							
		63	125	250	500	1000	2000	4000	8000
36	- 500	8	10	14	19	28	32	23	9
	0	8	9	13	19	28	33	24	10
	+ 500	8	8	12	18	28	33	24	11
60	- 500	11	14	21	30	40	44	30	11
	0	10	12	20	29	40	46	33	13
	+ 500	10	12	19	29	39	46	34	14
84	- 500	14	18	28	40	51	55	38	14
	0	12	16	27	40	51	55	41	16
	+ 500	12	15	26	40	51	55	43	17
108	- 500	16	21	35	41	51	55	45	17
	0	15	19	33	42	51	55	48	18
	+ 500	13	19	32	41	51	55	48	19

Pressure Drop (PD)

Pressure drops are reported in accordance with ASTM E477 methods and are based upon **ideal** flow conditions (5 diameters of straight duct on silencer inlet and 10 on outlet). Less than ideal conditions will result in an increase in pressure drop due to System Effects. See Silencer System Effects Data.

Length (in.)	Face Velocity (ft. per min) / Pressure Drop (in.w.g.)						
	250	500	750	1000	1250	1500	1750
36	0.03	0.13	0.30	0.53	0.83	1.19	1.62
60	0.04	0.17	0.38	0.67	1.05	1.51	2.05
84	0.05	0.21	0.47	0.84	1.30	1.88	2.56
108	0.06	0.23	0.52	0.93	1.45	2.08	2.83

☐ Acceptable (0 - 0.35") ☐ Caution (>0.35") Pressure Drop may be too high for certain applications

Generated Noise (GN)

@ 5 sq.ft. face area

Length (in.)	Face Velocity (ft. per min)	Octave Band - Hz/Generated Noise (dB re 10^{-12} watts)							
		63	125	250	500	1K	2K	4K	8K
All	- 750	56	47	48	48	50	53	45	36
	- 500	54	46	43	43	45	42	30	32
	+ 500	56	43	42	40	36	28	25	31
	+ 750	59	50	47	46	43	41	34	33

GN correction chart at right must be used to correct GN to other face areas. →

Face Area (sq.ft.)	2.5	5	10	20	40	80
dB	-3	0	+3	+6	+9	+12

Cross Section Sizes*

"A" dimension (in.)
9
17-18
33-37
50-56
66-75
83-94
99-113
116-240

"B" dimension
ANY SIZE

Approx. weight
6.9 lbs/cu.ft.

See Rectangular Silencer Cross-Section Dimensions to ensure selection matches ductwork dimensions.

CERTIFIED PERFORMANCE DATA

VIBRO-ACOUSTICS®
A Swegon Group company

RFL-ULV-F8

Rectangular Film Lined
Ultra low velocity silencer
(<500 fpm)

How to Specify Example:

14 X **22** **RFL-ULV-F8** X **60**

Duct Width | Duct Height | Silencer Model | Silencer Length

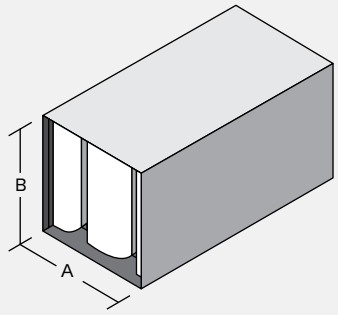

Insertion Loss (IL)

+ : "forward flow" where noise & airflow move in same direction (e.g. supply side)

- : "reverse flow" where noise & airflow move in opposite directions (e.g. return side)

See Silencer Selection Instructions. DIL above 50dB may be limited due to noise flanking around the silencer or along the duct walls. If more than 50dB DIL is required, contact your local Vibro-Acoustics Representative or call **1-800-565-8401**.

Length (in.)	Face Velocity (ft. per min)	Octave Band - Hz/Dynamic Insertion Loss (dB)							
		63	125	250	500	1000	2000	4000	8000
36	- 500	6	9	13	20	26	30	29	12
	0	5	6	13	19	25	30	28	11
	+ 500	5	6	12	19	25	30	28	12
60	- 500	9	14	20	31	41	45	31	14
	0	8	12	19	30	41	46	31	13
	+ 500	7	12	19	30	41	45	32	14
84	- 500	13	19	27	43	55	55	34	15
	0	11	18	26	41	55	55	35	16
	+ 500	10	17	25	41	55	55	36	15
108	- 500	16	24	34	44	55	55	39	18
	0	13	23	32	51	55	55	41	19
	+ 500	12	22	31	44	55	55	42	18

Pressure Drop (PD)

Pressure drops are reported in accordance with ASTM E477 methods and are based upon **ideal** flow conditions (5 diameters of straight duct on silencer inlet and 10 on outlet). Less than ideal conditions will result in an increase in pressure drop due to System Effects. See Silencer System Effects Data.

Length (in.)	Face Velocity (ft. per min) / Pressure Drop (in.w.g.)						
	250	500	750	1000	1250	1500	1750
36	0.04	0.16	0.35	0.63	0.98	1.42	1.93
60	0.05	0.19	0.42	0.76	1.18	1.70	2.31
84	0.06	0.22	0.50	0.88	1.38	1.98	2.70
108	0.06	0.25	0.57	1.01	1.57	2.26	3.08

☐ Acceptable (0 - 0.35") ☐ Caution (>0.35") Pressure Drop may be too high for certain applications

Generated Noise (GN)

@ 5 sq.ft. face area

Length (in.)	Face Velocity (ft. per min)	Octave Band - Hz/Generated Noise (dB re 10^{-12} watts)							
		63	125	250	500	1K	2K	4K	8K
All	- 750	55	46	49	51	49	51	42	37
	- 500	56	46	44	46	43	38	26	34
	+ 500	55	45	43	44	36	26	26	34
	+ 750	60	51	45	43	39	36	26	34

GN correction chart at right must be used to correct GN to other face areas. →

Face Area (sq.ft.)	2.5	5	10	20	40	80
dB	-3	0	+3	+6	+9	+12

Cross Section Sizes*

"A" dimension (in.)
7-8
14-16
27-32
41-49
54-65
68-240

"B" dimension
ANY SIZE

Approx. weight
7.2 lbs/cu.ft.

See Rectangular Silencer Cross-Section Dimensions to ensure selection matches ductwork dimensions.

CERTIFIED PERFORMANCE DATA

VIBRO-ACOUSTICS®
A Swegon Group company

RFL-ULV-F9

Rectangular Film Lined
Ultra low velocity silencer
(<500 fpm)

How to Specify Example:

21 X **21** **RFL-ULV-F9** X **60**

Duct Width | Duct Height | Silencer Model | Silencer Length

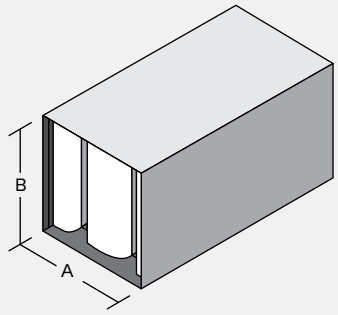

Insertion Loss (IL)

+ : "forward flow" where noise & airflow move in same direction (e.g. supply side)

- : "reverse flow" where noise & airflow move in opposite directions (e.g. return side)

See Silencer Selection Instructions. DIL above 50dB may be limited due to noise flanking around the silencer or along the duct walls. If more than 50dB DIL is required, contact your local Vibro-Acoustics Representative or call **1-800-565-8401**.

Length (in.)	Face Velocity (ft. per min)	Octave Band - Hz/Dynamic Insertion Loss (dB)							
		63	125	250	500	1000	2000	4000	8000
36	- 500	7	8	13	21	33	35	29	9
	0	6	6	12	20	32	35	30	10
	+ 500	5	6	11	19	32	35	31	11
60	- 500	10	13	20	31	44	47	39	13
	0	9	11	19	30	44	49	40	14
	+ 500	8	10	18	30	44	47	41	15
84	- 500	13	19	27	41	55	55	48	17
	0	12	17	25	40	55	55	50	18
	+ 500	11	15	24	40	55	55	52	19
108	- 500	17	24	34	43	55	55	55	20
	0	16	21	32	44	55	55	55	21
	+ 500	13	20	30	44	55	55	55	22

Pressure Drop (PD)

Pressure drops are reported in accordance with ASTM E477 methods and are based upon **ideal** flow conditions (5 diameters of straight duct on silencer inlet and 10 on outlet). Less than ideal conditions will result in an increase in pressure drop due to System Effects. See Silencer System Effects Data.

Length (in.)	Face Velocity (ft. per min) / Pressure Drop (in.w.g.)						
	250	500	750	1000	1250	1500	1750
36	0.04	0.16	0.35	0.62	0.97	1.40	1.90
60	0.05	0.19	0.43	0.77	1.20	1.73	2.36
84	0.06	0.23	0.52	0.92	1.44	2.07	2.82
108	0.07	0.27	0.61	1.09	1.70	2.45	3.34

☐ Acceptable (0 - 0.35") ☐ Caution (>0.35") Pressure Drop may be too high for certain applications

Generated Noise (GN)

@ 5 sq.ft. face area

Length (in.)	Face Velocity (ft. per min)	Octave Band - Hz/Generated Noise (dB re 10^{-12} watts)							
		63	125	250	500	1K	2K	4K	8K
All	- 750	55	49	51	52	51	54	45	37
	- 500	54	47	46	45	45	40	28	32
	+ 500	55	45	44	43	37	27	25	31
	+ 750	58	51	48	47	43	39	30	30

GN correction chart at right must be used to correct GN to other face areas. →

Face Area (sq.ft.)	2.5	5	10	20	40	80
dB	-3	0	+3	+6	+9	+12

Cross Section Sizes*

"A" dimension (in.)
6
10-13
20-26
30-240

"B" dimension
ANY SIZE

Approx. weight
7.5 lbs/cu.ft.

See Rectangular Silencer Cross-Section Dimensions to ensure selection matches ductwork dimensions.

CERTIFIED PERFORMANCE DATA

VIBRO-ACOUSTICS®
A Swegon Group company

RFL-LV-F1

Rectangular Film Lined
Low velocity silencer
(<750 fpm)

How to Specify Example:

32 X **21** **RFL-LV-F1** X **60**

Duct Width	Duct Height	Silencer Model	Silencer Length

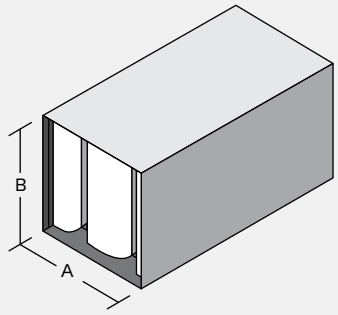

Insertion Loss (IL)

+ : "forward flow" where noise & airflow move in same direction (e.g. supply side)

- : "reverse flow" where noise & airflow move in opposite directions (e.g. return side)

See Silencer Selection Instructions. DIL above 50dB may be limited due to noise flanking around the silencer or along the duct walls. If more than 50dB DIL is required, contact your local Vibro-Acoustics Representative or call **1-800-565-8401**.

Length (in.)	Face Velocity (ft. per min)	Octave Band - Hz/Dynamic Insertion Loss (dB)							
		63	125	250	500	1000	2000	4000	8000
36	- 750	9	10	13	13	18	19	17	11
	0	7	10	12	13	17	23	17	11
	+ 750	7	9	12	12	17	23	18	11
60	- 750	11	13	21	23	28	27	20	12
	0	10	12	20	23	27	29	21	12
	+ 750	9	12	19	22	27	29	21	12
84	- 750	14	15	29	33	38	36	23	13
	0	12	14	28	32	38	34	25	13
	+ 750	11	14	27	31	38	35	25	13
108	- 750	17	18	36	39	46	45	26	14
	0	16	17	35	41	48	42	28	15
	+ 750	14	17	34	39	46	43	29	15

Pressure Drop (PD)

Pressure drops are reported in accordance with ASTM E477 methods and are based upon **ideal** flow conditions (5 diameters of straight duct on silencer inlet and 10 on outlet). Less than ideal conditions will result in an increase in pressure drop due to System Effects. See Silencer System Effects Data.

Length (in.)	Face Velocity (ft. per min) / Pressure Drop (in.w.g.)						
	250	500	750	1000	1250	1500	1750
36	0.02	0.07	0.15	0.27	0.42	0.61	0.83
60	0.02	0.09	0.20	0.36	0.56	0.80	1.09
84	0.03	0.11	0.25	0.45	0.70	1.00	1.36
108	0.03	0.13	0.30	0.53	0.83	1.20	1.63

☐ Acceptable (0 - 0.35") ☐ Caution (>0.35") Pressure Drop may be too high for certain applications

Generated Noise (GN)

@ 5 sq.ft. face area

Length (in.)	Face Velocity (ft. per min)	Octave Band - Hz/Generated Noise (dB re 10^{-12} watts)							
		63	125	250	500	1K	2K	4K	8K
All	- 750	58	43	42	44	47	48	37	32
	- 500	56	43	39	38	38	32	23	30
	+ 500	61	40	37	36	32	23	23	31
	+ 750	58	44	42	43	42	37	30	30

GN correction chart at right must be used to correct GN to other face areas. →

Face Area (sq.ft.)	2.5	5	10	20	40	80
dB	-3	0	+3	+6	+9	+12

Cross Section Sizes*

"A" dimension (in.)
15-16
29-32
58-64
87-96
116-128
145-160
174-192
203-224
232-240

"B" dimension
ANY SIZE

Approx. weight
6.4 lbs/cu.ft.

See Rectangular Silencer Cross-Section Dimensions to ensure selection matches ductwork dimensions.

CERTIFIED PERFORMANCE DATA

VIBRO-ACOUSTICS®
A Swegon Group company

RFL-LV-F2

Rectangular Film Lined
Low velocity silencer
(<750 fpm)

How to Specify Example:

27 X **22** **RFL-LV-F2** X **60**

Duct Width	Duct Height	Silencer Model	Silencer Length

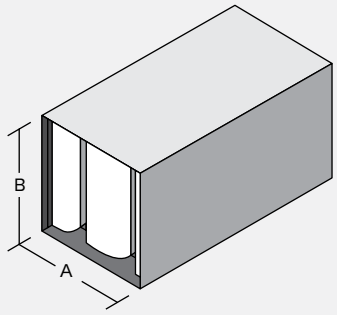

Insertion Loss (IL)

+ : "forward flow" where noise & airflow move in same direction (e.g. supply side)

- : "reverse flow" where noise & airflow move in opposite directions (e.g. return side)

See Silencer Selection Instructions. DIL above 50dB may be limited due to noise flanking around the silencer or along the duct walls. If more than 50dB DIL is required, contact your local Vibro-Acoustics Representative or call **1-800-565-8401**.

Length (in.)	Face Velocity (ft. per min)	Octave Band - Hz/Dynamic Insertion Loss (dB)							
		63	125	250	500	1000	2000	4000	8000
36	- 750	9	9	12	14	19	21	16	10
	0	7	9	12	14	18	23	16	10
	+ 750	7	8	11	13	18	24	17	10
60	- 750	11	12	19	24	29	31	20	11
	0	10	11	20	24	29	31	21	11
	+ 750	9	11	18	23	28	32	21	11
84	- 750	14	15	27	34	40	41	23	12
	0	13	14	27	34	40	40	25	12
	+ 750	11	13	25	32	39	40	26	12
108	- 750	17	18	35	39	46	47	26	13
	0	16	17	34	40	47	46	29	14
	+ 750	14	17	33	39	46	48	30	14

Pressure Drop (PD)

Pressure drops are reported in accordance with ASTM E477 methods and are based upon **ideal** flow conditions (5 diameters of straight duct on silencer inlet and 10 on outlet). Less than ideal conditions will result in an increase in pressure drop due to System Effects. See Silencer System Effects Data.

Length (in.)	Face Velocity (ft. per min) / Pressure Drop (in.w.g.)						
	250	500	750	1000	1250	1500	1750
36	0.02	0.07	0.15	0.26	0.41	0.59	0.81
60	0.02	0.09	0.20	0.35	0.55	0.79	1.08
84	0.03	0.11	0.24	0.43	0.67	0.97	1.32
108	0.03	0.12	0.28	0.50	0.77	1.11	1.52

☐ Acceptable (0 - 0.35") ☐ Caution (>0.35") Pressure Drop may be too high for certain applications

Generated Noise (GN)

@ 5 sq.ft. face area

Length (in.)	Face Velocity (ft. per min)	Octave Band - Hz/Generated Noise (dB re 10^{-12} watts)							
		63	125	250	500	1K	2K	4K	8K
All	- 750	57	44	44	45	48	49	37	31
	- 500	55	44	41	39	39	34	23	29
	+ 500	60	40	38	37	33	24	23	30
	+ 750	58	45	43	44	42	38	30	30

GN correction chart at right must be used to correct GN to other face areas. →

Face Area (sq.ft.)	2.5	5	10	20	40	80
dB	-3	0	+3	+6	+9	+12

Cross Section Sizes*

"A" dimension (in.)
14
27-28
54-57
81-86
108-115
135-144
162-173
189-202
216-231

"B" dimension
ANY SIZE

Approx. weight
6.4 lbs/cu.ft.

See Rectangular Silencer Cross-Section Dimensions to ensure selection matches ductwork dimensions.

CERTIFIED PERFORMANCE DATA

VIBRO-ACOUSTICS®
A Swegon Group company

RFL-LV-F3

Rectangular Film Lined
Low velocity silencer
(<750 fpm)

How to Specify Example:

25 X **21** **RFL-LV-F3** X **60**

Duct Width	Duct Height	Silencer Model	Silencer Length

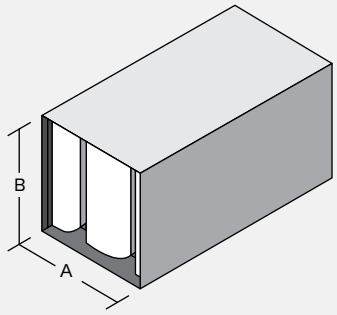

Insertion Loss (IL)

+ : "forward flow" where noise & airflow move in same direction (e.g. supply side)

- : "reverse flow" where noise & airflow move in opposite directions (e.g. return side)

See Silencer Selection Instructions. DIL above 50dB may be limited due to noise flanking around the silencer or along the duct walls. If more than 50dB DIL is required, contact your local Vibro-Acoustics Representative or call **1-800-565-8401**.

Length (in.)	Face Velocity (ft. per min)	Octave Band - Hz/Dynamic Insertion Loss (dB)							
		63	125	250	500	1000	2000	4000	8000
36	- 750	8	8	11	16	20	23	15	9
	0	7	8	12	15	19	24	16	9
	+ 750	7	7	10	14	18	24	16	9
60	- 750	11	11	18	25	31	35	19	10
	0	10	11	19	26	31	34	21	10
	+ 750	9	10	17	23	29	35	21	10
84	- 750	14	14	25	35	43	46	24	11
	0	13	14	27	37	42	45	26	12
	+ 750	12	13	23	33	40	45	26	12
108	- 750	16	19	34	38	45	49	27	12
	0	16	17	33	39	45	51	30	13
	+ 750	14	16	31	39	45	52	31	14

Pressure Drop (PD)

Pressure drops are reported in accordance with ASTM E477 methods and are based upon **ideal** flow conditions (5 diameters of straight duct on silencer inlet and 10 on outlet). Less than ideal conditions will result in an increase in pressure drop due to System Effects. See Silencer System Effects Data.

Length (in.)	Face Velocity (ft. per min) / Pressure Drop (in.w.g.)						
	250	500	750	1000	1250	1500	1750
36	0.02	0.06	0.14	0.26	0.40	0.58	0.79
60	0.02	0.09	0.19	0.35	0.54	0.78	1.06
84	0.03	0.10	0.23	0.42	0.65	0.93	1.27
108	0.03	0.11	0.26	0.46	0.71	1.03	1.40

☐ Acceptable (0 - 0.35") ☐ Caution (>0.35") Pressure Drop may be too high for certain applications

Generated Noise (GN)

@ 5 sq.ft. face area

Length (in.)	Face Velocity (ft. per min)	Octave Band - Hz/Generated Noise (dB re 10^{-12} watts)							
		63	125	250	500	1K	2K	4K	8K
All	- 750	56	46	46	47	48	49	38	31
	- 500	55	44	43	40	40	35	24	28
	+ 500	58	40	39	38	33	24	22	29
	+ 750	58	46	44	44	42	39	31	30

GN correction chart at right must be used to correct GN to other face areas. →

Face Area (sq.ft.)	2.5	5	10	20	40	80
dB	-3	0	+3	+6	+9	+12

Cross Section Sizes*

"A" dimension (in.)
13
25-26
50-53
75-80
100-107
125-134
150-161
175-188
200-215
225-240

"B" dimension
ANY SIZE

Approx. weight
6.6 lbs/cu.ft.

See Rectangular Silencer Cross-Section Dimensions to ensure selection matches ductwork dimensions.

CERTIFIED PERFORMANCE DATA

VIBRO-ACOUSTICS®
A Swegon Group company

RFL-LV-F4

Rectangular Film Lined
Low velocity silencer
(<750 fpm)

How to Specify Example:

47 X **22** **RFL-LV-F4** X **60**

Duct Width	Duct Height	Silencer Model	Silencer Length

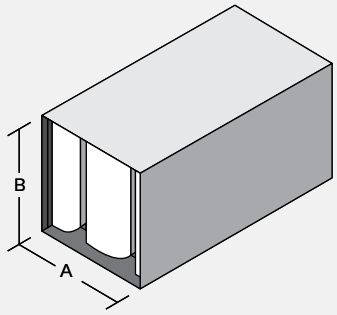

Insertion Loss (IL)

+ : "forward flow" where noise & airflow move in same direction (e.g. supply side)

- : "reverse flow" where noise & airflow move in opposite directions (e.g. return side)

See Silencer Selection Instructions. DIL above 50dB may be limited due to noise flanking around the silencer or along the duct walls. If more than 50dB DIL is required, contact your local Vibro-Acoustics Representative or call **1-800-565-8401**.

Length (in.)	Face Velocity (ft. per min)	Octave Band - Hz/Dynamic Insertion Loss (dB)							
		63	125	250	500	1000	2000	4000	8000
36	- 750	8	7	11	17	21	25	14	8
	0	7	7	12	17	20	24	15	8
	+ 750	7	6	10	15	19	25	15	8
60	- 750	11	10	17	26	33	38	19	9
	0	10	10	19	28	32	37	20	10
	+ 750	9	9	15	24	31	38	21	9
84	- 750	14	14	23	36	45	51	24	11
	0	13	14	26	39	45	50	26	11
	+ 750	12	12	21	33	42	50	27	11
108	- 750	15	19	33	38	45	51	27	12
	0	15	17	31	39	44	55	30	12
	+ 750	14	16	30	39	44	55	33	13

Pressure Drop (PD)

Pressure drops are reported in accordance with ASTM E477 methods and are based upon **ideal** flow conditions (5 diameters of straight duct on silencer inlet and 10 on outlet). Less than ideal conditions will result in an increase in pressure drop due to System Effects. See Silencer System Effects Data.

Length (in.)	Face Velocity (ft. per min) / Pressure Drop (in.w.g.)						
	250	500	750	1000	1250	1500	1750
36	0.02	0.06	0.14	0.25	0.39	0.56	0.77
60	0.02	0.09	0.19	0.34	0.53	0.77	1.04
84	0.03	0.10	0.23	0.40	0.63	0.90	1.23
108	0.03	0.11	0.24	0.42	0.66	0.95	1.29

☐ Acceptable (0 - 0.35") ☐ Caution (>0.35") Pressure Drop may be too high for certain applications

Generated Noise (GN)

@ 5 sq.ft. face area

Length (in.)	Face Velocity (ft. per min)	Octave Band - Hz/Generated Noise (dB re 10^{-12} watts)							
		63	125	250	500	1K	2K	4K	8K
All	- 750	55	47	48	48	49	50	38	30
	- 500	55	45	45	42	42	36	24	28
	+ 500	57	41	41	38	34	25	22	28
	+ 750	57	46	45	45	42	39	31	29

GN correction chart at right must be used to correct GN to other face areas. →

Face Area (sq.ft.)	2.5	5	10	20	40	80
dB	-3	0	+3	+6	+9	+12

Cross Section Sizes*

"A" dimension (in.)
12
23-24
46-49
69-74
92-99
115-124
138-149
161-174
184-199
207-224
230-240

"B" dimension
ANY SIZE

Approx. weight
6.7 lbs/cu.ft.

See Rectangular Silencer Cross-Section Dimensions to ensure selection matches ductwork dimensions.

CERTIFIED PERFORMANCE DATA

VIBRO-ACOUSTICS®
A Swegon Group company

RFL-LV-F5

Rectangular Film Lined
Low velocity silencer
(<750 fpm)

How to Specify Example:

44 X **22** **RFL-LV-F5** X **60**

Duct Width	Duct Height	Silencer Model	Silencer Length

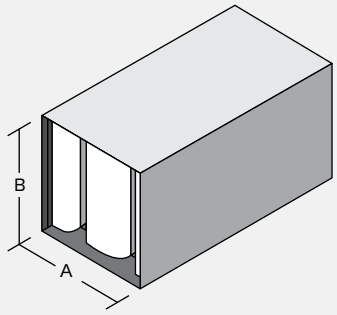

Insertion Loss (IL)

+ : "forward flow" where noise & airflow move in same direction (e.g. supply side)

- : "reverse flow" where noise & airflow move in opposite directions (e.g. return side)

See Silencer Selection Instructions. DIL above 50dB may be limited due to noise flanking around the silencer or along the duct walls. If more than 50dB DIL is required, contact your local Vibro-Acoustics Representative or call **1-800-565-8401**.

Length (in.)	Face Velocity (ft. per min)	Octave Band - Hz/Dynamic Insertion Loss (dB)							
		63	125	250	500	1000	2000	4000	8000
36	- 750	8	7	11	17	22	26	16	8
	0	7	7	12	17	22	25	17	9
	+ 750	7	6	10	16	21	26	17	8
60	- 750	11	11	17	27	34	39	22	10
	0	10	10	19	28	34	39	23	10
	+ 750	9	9	15	25	32	39	24	10
84	- 750	14	15	22	36	47	51	28	12
	0	13	14	26	39	46	52	30	12
	+ 750	12	12	21	34	44	52	31	12
108	- 750	15	19	32	39	46	51	30	12
	0	15	17	31	39	46	55	34	13
	+ 750	14	16	29	39	46	55	36	14

Pressure Drop (PD)

Pressure drops are reported in accordance with ASTM E477 methods and are based upon **ideal** flow conditions (5 diameters of straight duct on silencer inlet and 10 on outlet). Less than ideal conditions will result in an increase in pressure drop due to System Effects. See Silencer System Effects Data.

Length (in.)	Face Velocity (ft. per min) / Pressure Drop (in.w.g.)						
	250	500	750	1000	1250	1500	1750
36	0.02	0.07	0.15	0.26	0.41	0.59	0.80
60	0.02	0.09	0.21	0.37	0.58	0.83	1.13
84	0.03	0.11	0.24	0.43	0.67	0.96	1.31
108	0.03	0.11	0.25	0.45	0.70	1.00	1.37

☐ Acceptable (0 - 0.35") ☐ Caution (>0.35") Pressure Drop may be too high for certain applications

Generated Noise (GN)

@ 5 sq.ft. face area

Length (in.)	Face Velocity (ft. per min)	Octave Band - Hz/Generated Noise (dB re 10^{-12} watts)							
		63	125	250	500	1K	2K	4K	8K
All	- 750	55	47	47	49	50	50	38	30
	- 500	54	45	46	43	42	36	24	28
	+ 500	57	41	41	39	33	24	22	28
	+ 750	57	46	44	45	42	38	30	29

GN correction chart at right must be used to correct GN to other face areas. →

Face Area (sq.ft.)	2.5	5	10	20	40	80
dB	-3	0	+3	+6	+9	+12

Cross Section Sizes*

"A" dimension (in.)
11
21-22
42-45
63-68
84-91
105-114
126-137
147-160
168-183
189-206
210-229
231-240

"B" dimension
ANY SIZE

Approx. weight
6.5 lbs/cu.ft.

See Rectangular Silencer Cross-Section Dimensions to ensure selection matches ductwork dimensions.

CERTIFIED PERFORMANCE DATA

VIBRO-ACOUSTICS®
A Swegon Group company

RFL-LV-F6

Rectangular Film Lined
Low velocity silencer
(<750 fpm)

How to Specify Example:

40 X **21** **RFL-LV-F6** X **60**

Duct Width	Duct Height	Silencer Model	Silencer Length

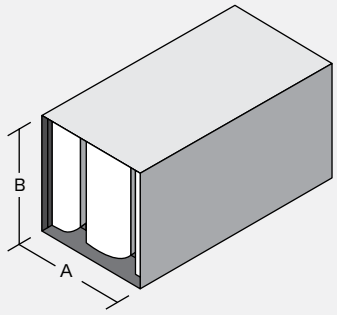

Insertion Loss (IL)

+ : "forward flow" where noise & airflow move in same direction (e.g. supply side)

- : "reverse flow" where noise & airflow move in opposite directions (e.g. return side)

See Silencer Selection Instructions. DIL above 50dB may be limited due to noise flanking around the silencer or along the duct walls. If more than 50dB DIL is required, contact your local Vibro-Acoustics Representative or call **1-800-565-8401**.

Length (in.)	Face Velocity (ft. per min)	Octave Band - Hz/Dynamic Insertion Loss (dB)							
		63	125	250	500	1000	2000	4000	8000
36	- 750	8	7	11	18	24	27	18	8
	0	6	6	11	17	23	27	19	9
	+ 750	6	6	10	16	22	27	19	8
60	- 750	11	11	17	27	36	39	25	10
	0	9	10	18	29	36	40	27	11
	+ 750	9	9	15	25	34	40	27	11
84	- 750	15	15	22	37	48	51	32	12
	0	13	14	25	40	48	53	35	13
	+ 750	12	13	20	34	46	53	35	13
108	- 750	15	19	32	40	47	52	34	13
	0	15	17	30	40	47	55	38	14
	+ 750	14	16	29	40	47	55	40	15

Pressure Drop (PD)

Pressure drops are reported in accordance with ASTM E477 methods and are based upon **ideal** flow conditions (5 diameters of straight duct on silencer inlet and 10 on outlet). Less than ideal conditions will result in an increase in pressure drop due to System Effects. See Silencer System Effects Data.

Length (in.)	Face Velocity (ft. per min) / Pressure Drop (in.w.g.)						
	250	500	750	1000	1250	1500	1750
36	0.02	0.07	0.15	0.27	0.42	0.61	0.83
60	0.02	0.10	0.22	0.40	0.62	0.89	1.21
84	0.03	0.11	0.26	0.45	0.71	1.02	1.39
108	0.03	0.12	0.27	0.47	0.74	1.06	1.44

☐ Acceptable (0 - 0.35") ☐ Caution (>0.35") Pressure Drop may be too high for certain applications

Generated Noise (GN)

@ 5 sq.ft. face area

Length (in.)	Face Velocity (ft. per min)	Octave Band - Hz/Generated Noise (dB re 10^{-12} watts)							
		63	125	250	500	1K	2K	4K	8K
All	- 750	54	47	47	49	50	50	38	30
	- 500	54	45	47	45	43	37	25	28
	+ 500	56	41	41	40	33	23	22	28
	+ 750	56	46	44	44	41	38	29	29

GN correction chart at right must be used to correct GN to other face areas. →

Face Area (sq.ft.)	2.5	5	10	20	40	80
dB	-3	0	+3	+6	+9	+12

Cross Section Sizes*

"A" dimension (in.)
10
19-20
38-41
57-62
76-83
95-104
114-125
133-146
152-167
171-188
190-240

"B" dimension
ANY SIZE

Approx. weight
6.6 lbs/cu.ft.

See Rectangular Silencer Cross-Section Dimensions to ensure selection matches ductwork dimensions.

CERTIFIED PERFORMANCE DATA

VIBRO-ACOUSTICS®
A Swegon Group company

RFL-LV-F7

Rectangular Film Lined
Low velocity silencer
(<750 fpm)

How to Specify Example:

37 X **21** **RFL-LV-F7** X **60**

Duct Width	Duct Height	Silencer Model	Silencer Length

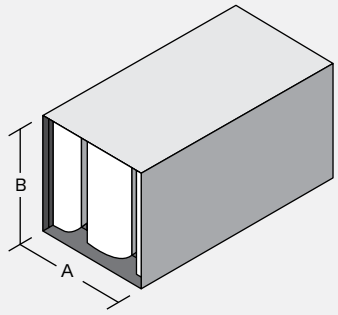

Insertion Loss (IL)

+ : "forward flow" where noise & airflow move in same direction (e.g. supply side)

- : "reverse flow" where noise & airflow move in opposite directions (e.g. return side)

See Silencer Selection Instructions. DIL above 50dB may be limited due to noise flanking around the silencer or along the duct walls. If more than 50dB DIL is required, contact your local Vibro-Acoustics Representative or call **1-800-565-8401**.

Length (in.)	Face Velocity (ft. per min)	Octave Band - Hz/Dynamic Insertion Loss (dB)							
		63	125	250	500	1000	2000	4000	8000
36	- 750	7	6	11	18	25	29	20	9
	0	6	6	11	18	25	28	21	9
	+ 750	6	6	10	17	24	28	21	8
60	- 750	11	11	17	28	37	40	28	11
	0	9	10	18	29	37	41	30	11
	+ 750	9	9	15	26	36	41	30	11
84	- 750	15	16	22	37	49	51	36	13
	0	13	14	25	40	49	55	39	14
	+ 750	12	13	20	35	48	55	39	14
108	- 750	15	19	31	40	49	53	37	13
	0	15	17	29	41	49	55	42	15
	+ 750	14	16	28	41	49	55	43	16

Pressure Drop (PD)

Pressure drops are reported in accordance with ASTM E477 methods and are based upon **ideal** flow conditions (5 diameters of straight duct on silencer inlet and 10 on outlet). Less than ideal conditions will result in an increase in pressure drop due to System Effects. See Silencer System Effects Data.

Length (in.)	Face Velocity (ft. per min) / Pressure Drop (in.w.g.)						
	250	500	750	1000	1250	1500	1750
36	0.02	0.07	0.16	0.28	0.44	0.63	0.86
60	0.03	0.11	0.24	0.43	0.66	0.96	1.30
84	0.03	0.12	0.27	0.48	0.75	1.08	1.47
108	0.03	0.12	0.28	0.50	0.78	1.12	1.52

☐ Acceptable (0 - 0.35") ☐ Caution (>0.35") Pressure Drop may be too high for certain applications

Generated Noise (GN)

@ 5 sq.ft. face area

Length (in.)	Face Velocity (ft. per min)	Octave Band - Hz/Generated Noise (dB re 10^{-12} watts)							
		63	125	250	500	1K	2K	4K	8K
All	- 750	54	47	47	50	51	50	39	30
	- 500	54	46	48	46	43	37	25	28
	+ 500	56	41	42	42	32	22	22	28
	+ 750	56	45	43	44	41	37	28	29

GN correction chart at right must be used to correct GN to other face areas. →

Face Area (sq.ft.)	2.5	5	10	20	40	80
dB	-3	0	+3	+6	+9	+12

Cross Section Sizes*

"A" dimension (in.)
9
17-18
33-37
50-56
66-75
83-94
99-113
116-240

"B" dimension
ANY SIZE

Approx. weight
6.7 lbs/cu.ft.

See Rectangular Silencer Cross-Section Dimensions to ensure selection matches ductwork dimensions.

CERTIFIED PERFORMANCE DATA

VIBRO-ACOUSTICS®
A Swegon Group company

RFL-LV-F8

Rectangular Film Lined
Low velocity silencer
(<750 fpm)

How to Specify Example:

14 X **22** **RFL-LV-F8** X **60**

Duct Width	Duct Height	Silencer Model	Silencer Length

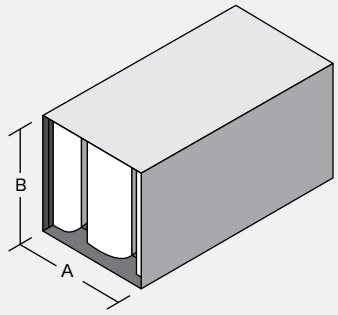

Insertion Loss (IL)

+ : "forward flow" where noise & airflow move in same direction (e.g. supply side)

- : "reverse flow" where noise & airflow move in opposite directions (e.g. return side)

See Silencer Selection Instructions. DIL above 50dB may be limited due to noise flanking around the silencer or along the duct walls. If more than 50dB DIL is required, contact your local Vibro-Acoustics Representative or call **1-800-565-8401**.

Length (in.)	Face Velocity (ft. per min)	Octave Band - Hz/Dynamic Insertion Loss (dB)							
		63	125	250	500	1000	2000	4000	8000
36	- 750	5	7	12	19	23	26	24	11
	0	4	6	11	19	22	26	25	10
	+ 750	4	6	11	18	22	26	25	10
60	- 750	9	12	19	31	39	41	29	12
	0	8	11	17	31	39	43	30	12
	+ 750	7	10	17	30	39	43	31	12
84	- 750	13	17	26	43	55	55	34	13
	0	11	16	24	42	55	55	36	14
	+ 750	10	14	23	41	55	55	36	14
108	- 750	17	22	33	44	55	55	42	15
	0	15	20	30	53	55	55	44	17
	+ 750	12	18	29	44	55	55	45	16

Pressure Drop (PD)

Pressure drops are reported in accordance with ASTM E477 methods and are based upon **ideal** flow conditions (5 diameters of straight duct on silencer inlet and 10 on outlet). Less than ideal conditions will result in an increase in pressure drop due to System Effects. See Silencer System Effects Data.

Length (in.)	Face Velocity (ft. per min) / Pressure Drop (in.w.g.)						
	250	500	750	1000	1250	1500	1750
36	0.02	0.08	0.18	0.32	0.50	0.72	0.98
60	0.03	0.11	0.24	0.42	0.66	0.95	1.29
84	0.03	0.13	0.29	0.52	0.81	1.17	1.59
108	0.04	0.16	0.35	0.62	0.97	1.40	1.90

☐ Acceptable (0 - 0.35") ☐ Caution (>0.35") Pressure Drop may be too high for certain applications

Generated Noise (GN)

@ 5 sq.ft. face area

Length (in.)	Face Velocity (ft. per min)	Octave Band - Hz/Generated Noise (dB re 10^{-12} watts)							
		63	125	250	500	1K	2K	4K	8K
All	- 750	54	43	44	49	50	48	36	30
	- 500	56	47	48	52	43	35	23	30
	+ 500	55	42	43	46	30	19	23	30
	+ 750	56	44	39	40	37	32	22	30

GN correction chart at right must be used to correct GN to other face areas. →

Face Area (sq.ft.)	2.5	5	10	20	40	80
dB	-3	0	+3	+6	+9	+12

Cross Section Sizes*

"A" dimension (in.)
7-8
14-16
27-32
41-49
54-65
68-240

"B" dimension
ANY SIZE

Approx. weight
7.0 lbs/cu.ft.

See Rectangular Silencer Cross-Section Dimensions to ensure selection matches ductwork dimensions.

CERTIFIED PERFORMANCE DATA

VIBRO-ACOUSTICS®
A Swegon Group company

RFL-LV-F9

Rectangular Film Lined
Low velocity silencer
(<750 fpm)

How to Specify Example:

21 X **21** **RFL-LV-F9** X **60**

Duct Width	Duct Height	Silencer Model	Silencer Length

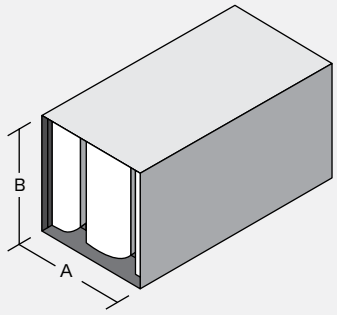

Insertion Loss (IL)

+ : "forward flow" where noise & airflow move in same direction (e.g. supply side)

- : "reverse flow" where noise & airflow move in opposite directions (e.g. return side)

See Silencer Selection Instructions. DIL above 50dB may be limited due to noise flanking around the silencer or along the duct walls. If more than 50dB DIL is required, contact your local Vibro-Acoustics Representative or call **1-800-565-8401**.

Length (in.)	Face Velocity (ft. per min)	Octave Band - Hz/Dynamic Insertion Loss (dB)							
		63	125	250	500	1000	2000	4000	8000
36	- 750	6	6	11	20	30	32	27	9
	0	5	5	10	19	29	31	27	9
	+ 750	5	5	10	18	28	31	27	9
60	- 750	11	12	16	29	42	41	38	13
	0	9	10	17	30	42	45	39	13
	+ 750	9	9	14	27	41	45	39	13
84	- 750	16	17	22	38	53	51	49	16
	0	12	15	23	41	54	55	51	16
	+ 750	13	14	19	36	53	55	51	17
108	- 750	15	19	29	42	53	54	48	15
	0	16	16	27	43	54	55	53	18
	+ 750	13	15	25	42	54	55	54	19

Pressure Drop (PD)

Pressure drops are reported in accordance with ASTM E477 methods and are based upon **ideal** flow conditions (5 diameters of straight duct on silencer inlet and 10 on outlet). Less than ideal conditions will result in an increase in pressure drop due to System Effects. See Silencer System Effects Data.

Length (in.)	Face Velocity (ft. per min) / Pressure Drop (in.w.g.)						
	250	500	750	1000	1250	1500	1750
36	0.02	0.08	0.17	0.31	0.48	0.70	0.95
60	0.03	0.13	0.29	0.51	0.80	1.15	1.56
84	0.04	0.14	0.32	0.56	0.88	1.26	1.72
108	0.04	0.14	0.32	0.58	0.90	1.29	1.76

☐ Acceptable (0 - 0.35") ☐ Caution (>0.35") Pressure Drop may be too high for certain applications

Generated Noise (GN)

@ 5 sq.ft. face area

Length (in.)	Face Velocity (ft. per min)	Octave Band - Hz/Generated Noise (dB re 10^{-12} watts)							
		63	125	250	500	1K	2K	4K	8K
All	- 750	54	46	47	51	52	51	39	31
	- 500	54	47	50	51	45	38	26	28
	+ 500	54	42	43	45	31	20	21	28
	+ 750	54	44	42	43	40	34	25	29

GN correction chart at right must be used to correct GN to other face areas. →

Face Area (sq.ft.)	2.5	5	10	20	40	80
dB	-3	0	+3	+6	+9	+12

Cross Section Sizes*

"A" dimension (in.)
6
10-13
20-26
30-240

"B" dimension
ANY SIZE

Approx. weight
7.3 lbs/cu.ft.

See Rectangular Silencer Cross-Section Dimensions to ensure selection matches ductwork dimensions.

CERTIFIED PERFORMANCE DATA

VIBRO-ACOUSTICS®
A Swegon Group company

RFL-MV-F1

Rectangular Film Lined
Medium velocity silencer
(<1250 fpm)

How to Specify Example:

32 X **21** **RFL-MV-F1** X **60**

Duct Width	Duct Height	Silencer Model	Silencer Length

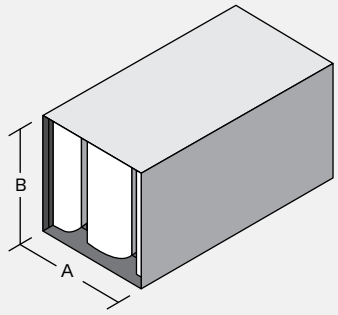

Insertion Loss (IL)

+ : "forward flow" where noise & airflow move in same direction (e.g. supply side)

- : "reverse flow" where noise & airflow move in opposite directions (e.g. return side)

See Silencer Selection Instructions. DIL above 50dB may be limited due to noise flanking around the silencer or along the duct walls. If more than 50dB DIL is required, contact your local Vibro-Acoustics Representative or call **1-800-565-8401**.

Length (in.)	Face Velocity (ft. per min)	Octave Band - Hz/Dynamic Insertion Loss (dB)							
		63	125	250	500	1000	2000	4000	8000
36	- 1250	4	7	14	17	16	15	15	9
	0	3	6	13	16	15	16	14	9
	+ 1250	3	5	12	16	15	16	14	8
60	- 1250	7	10	20	21	24	25	16	10
	0	6	9	20	20	23	24	17	10
	+ 1250	5	8	18	19	23	24	17	9
84	- 1250	10	14	27	25	32	34	18	10
	0	8	12	26	24	31	32	19	11
	+ 1250	8	11	25	23	31	33	20	10
108	- 1250	12	17	35	32	49	42	21	12
	0	11	15	33	30	39	38	22	12
	+ 1250	10	14	31	29	40	40	23	12

Pressure Drop (PD)

Pressure drops are reported in accordance with ASTM E477 methods and are based upon **ideal** flow conditions (5 diameters of straight duct on silencer inlet and 10 on outlet). Less than ideal conditions will result in an increase in pressure drop due to System Effects. See Silencer System Effects Data.

Length (in.)	Face Velocity (ft. per min) / Pressure Drop (in.w.g.)						
	500	750	1000	1250	1500	1750	2000
36	0.03	0.07	0.13	0.21	0.30	0.40	0.53
60	0.04	0.10	0.18	0.28	0.40	0.54	0.70
84	0.06	0.12	0.22	0.34	0.50	0.67	0.88
108	0.07	0.15	0.26	0.41	0.59	0.81	1.06

☐ Acceptable (0 - 0.35") ☐ Caution (>0.35") Pressure Drop may be too high for certain applications

Generated Noise (GN)

@ 5 sq.ft. face area

Length (in.)	Face Velocity (ft. per min)	Octave Band - Hz/Generated Noise (dB re 10^{-12} watts)							
		63	125	250	500	1K	2K	4K	8K
All	- 1250	54	51	50	50	50	51	42	31
	- 750	52	41	39	37	39	33	22	24
	+ 750	52	38	36	33	32	29	21	24
	+ 1250	56	51	47	45	45	47	39	30

GN correction chart at right must be used to correct GN to other face areas. →

Face Area (sq.ft.)	2.5	5	10	20	40	80
dB	-3	0	+3	+6	+9	+12

Cross Section Sizes*

"A" dimension (in.)
15-16
29-32
58-64
87-96
116-128
145-160
174-192
203-224
232-240

"B" dimension
ANY SIZE

Approx. weight
6.0 lbs/cu.ft.

See Rectangular Silencer Cross-Section Dimensions to ensure selection matches ductwork dimensions.

CERTIFIED PERFORMANCE DATA

VIBRO-ACOUSTICS®
A Swegon Group company

RFL-MV-F2

Rectangular Film Lined
Medium velocity silencer
(<1250 fpm)

How to Specify Example:

27 X **22** **RFL-MV-F2** X **60**

Duct Width	Duct Height	Silencer Model	Silencer Length

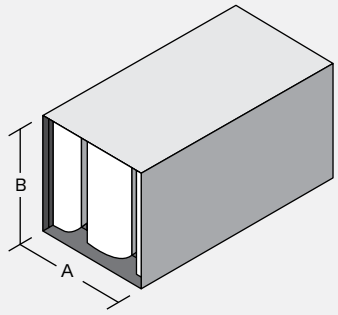

Insertion Loss (IL)

+ : "forward flow" where noise & airflow move in same direction (e.g. supply side)

- : "reverse flow" where noise & airflow move in opposite directions (e.g. return side)

See Silencer Selection Instructions. DIL above 50dB may be limited due to noise flanking around the silencer or along the duct walls. If more than 50dB DIL is required, contact your local Vibro-Acoustics Representative or call **1-800-565-8401**.

Length (in.)	Face Velocity (ft. per min)	Octave Band - Hz/Dynamic Insertion Loss (dB)							
		63	125	250	500	1000	2000	4000	8000
36	- 1250	4	6	13	18	17	15	13	8
	0	3	5	13	17	16	15	13	8
	+ 1250	3	5	12	16	16	16	13	8
60	- 1250	7	9	19	22	25	25	16	9
	0	6	9	19	22	24	25	16	9
	+ 1250	6	8	17	20	24	26	16	9
84	- 1250	11	13	24	26	33	36	18	10
	0	9	12	25	27	32	34	18	10
	+ 1250	8	10	22	24	32	36	19	9
108	- 1250	12	16	33	32	42	42	20	10
	0	10	15	32	32	41	40	21	11
	+ 1250	9	14	30	31	42	42	23	11

Pressure Drop (PD)

Pressure drops are reported in accordance with ASTM E477 methods and are based upon **ideal** flow conditions (5 diameters of straight duct on silencer inlet and 10 on outlet). Less than ideal conditions will result in an increase in pressure drop due to System Effects. See Silencer System Effects Data.

Length (in.)	Face Velocity (ft. per min) / Pressure Drop (in.w.g.)						
	500	750	1000	1250	1500	1750	2000
36	0.03	0.07	0.12	0.19	0.27	0.37	0.49
60	0.04	0.09	0.16	0.26	0.37	0.50	0.66
84	0.05	0.11	0.20	0.31	0.45	0.61	0.80
108	0.06	0.13	0.24	0.37	0.54	0.73	0.96

☐ Acceptable (0 - 0.35") ☐ Caution (>0.35") Pressure Drop may be too high for certain applications

Generated Noise (GN)

@ 5 sq.ft. face area

Length (in.)	Face Velocity (ft. per min)	Octave Band - Hz/Generated Noise (dB re 10^{-12} watts)							
		63	125	250	500	1K	2K	4K	8K
All	- 1250	54	51	50	50	50	51	43	32
	- 750	52	41	40	39	40	34	22	24
	+ 750	52	38	36	34	32	29	21	24
	+ 1250	56	51	48	45	45	47	39	30

GN correction chart at right must be used to correct GN to other face areas. →

Face Area (sq.ft.)	2.5	5	10	20	40	80
dB	-3	0	+3	+6	+9	+12

Cross Section Sizes*

"A" dimension (in.)
14
27-28
54-57
81-86
108-115
135-144
162-173
189-202
216-231

"B" dimension
ANY SIZE

Approx. weight
6.0 lbs/cu.ft.

See Rectangular Silencer Cross-Section Dimensions to ensure selection matches ductwork dimensions.

CERTIFIED PERFORMANCE DATA

VIBRO-ACOUSTICS®
A Swegon Group company

RFL-MV-F3

Rectangular Film Lined
Medium velocity silencer
(<1250 fpm)

How to Specify Example:

25 X **21** **RFL-MV-F3** X **60**

Duct Width	Duct Height	Silencer Model	Silencer Length

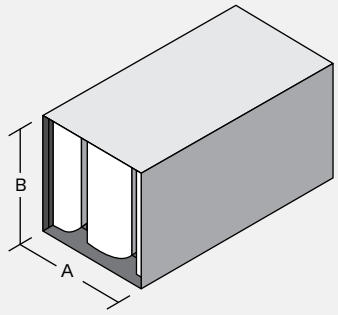

Insertion Loss (IL)

+ : "forward flow" where noise & airflow move in same direction (e.g. supply side)

- : "reverse flow" where noise & airflow move in opposite directions (e.g. return side)

See Silencer Selection Instructions. DIL above 50dB may be limited due to noise flanking around the silencer or along the duct walls. If more than 50dB DIL is required, contact your local Vibro-Acoustics Representative or call **1-800-565-8401**.

Length (in.)	Face Velocity (ft. per min)	Octave Band - Hz/Dynamic Insertion Loss (dB)							
		63	125	250	500	1000	2000	4000	8000
36	- 1250	4	6	13	19	17	16	12	7
	0	3	5	12	19	16	15	12	7
	+ 1250	3	5	11	17	16	16	12	7
60	- 1250	8	9	17	23	26	26	15	8
	0	6	8	18	24	25	25	15	8
	+ 1250	6	7	15	21	25	27	15	8
84	- 1250	12	12	21	27	35	37	18	9
	0	10	12	24	29	34	36	18	9
	+ 1250	9	10	18	24	33	38	18	9
108	- 1250	12	16	32	32	43	42	20	9
	0	10	15	30	34	43	43	20	10
	+ 1250	9	14	29	33	44	45	22	11

Pressure Drop (PD)

Pressure drops are reported in accordance with ASTM E477 methods and are based upon **ideal** flow conditions (5 diameters of straight duct on silencer inlet and 10 on outlet). Less than ideal conditions will result in an increase in pressure drop due to System Effects. See Silencer System Effects Data.

Length (in.)	Face Velocity (ft. per min) / Pressure Drop (in.w.g.)						
	500	750	1000	1250	1500	1750	2000
36	0.03	0.06	0.11	0.17	0.25	0.34	0.44
60	0.04	0.09	0.15	0.24	0.34	0.47	0.61
84	0.05	0.10	0.18	0.28	0.41	0.55	0.72
108	0.05	0.12	0.21	0.34	0.48	0.66	0.86

☐ Acceptable (0 - 0.35") ☐ Caution (>0.35") Pressure Drop may be too high for certain applications

Generated Noise (GN)

@ 5 sq.ft. face area

Length (in.)	Face Velocity (ft. per min)	Octave Band - Hz/Generated Noise (dB re 10^{-12} watts)							
		63	125	250	500	1K	2K	4K	8K
All	- 1250	54	51	49	50	50	52	43	32
	- 750	52	41	40	40	41	34	23	24
	+ 750	52	38	37	35	33	29	21	24
	+ 1250	56	52	48	46	45	47	39	31

GN correction chart at right must be used to correct GN to other face areas. →

Face Area (sq.ft.)	2.5	5	10	20	40	80
dB	-3	0	+3	+6	+9	+12

Cross Section Sizes*

"A" dimension (in.)
13
25-26
50-53
75-80
100-107
125-134
150-161
175-188
200-215
225-240

"B" dimension
ANY SIZE

Approx. weight
6.1 lbs/cu.ft.

See Rectangular Silencer Cross-Section Dimensions to ensure selection matches ductwork dimensions.

CERTIFIED PERFORMANCE DATA

VIBRO-ACOUSTICS®
A Swegon Group company

RFL-MV-F4

Rectangular Film Lined
Medium velocity silencer
(<1250 fpm)

How to Specify Example:

47 X **22** **RFL-MV-F4** X **60**

Duct Width	Duct Height	Silencer Model	Silencer Length

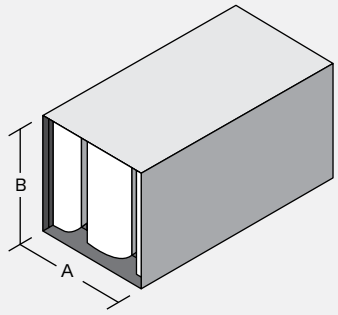

Insertion Loss (IL)

+ : "forward flow" where noise & airflow move in same direction (e.g. supply side)

- : "reverse flow" where noise & airflow move in opposite directions (e.g. return side)

See Silencer Selection Instructions. DIL above 50dB may be limited due to noise flanking around the silencer or along the duct walls. If more than 50dB DIL is required, contact your local Vibro-Acoustics Representative or call **1-800-565-8401**.

Length (in.)	Face Velocity (ft. per min)	Octave Band - Hz/Dynamic Insertion Loss (dB)							
		63	125	250	500	1000	2000	4000	8000
36	- 1250	4	6	12	19	17	16	11	6
	0	3	5	12	20	17	15	11	7
	+ 1250	3	5	11	18	17	16	12	6
60	- 1250	8	8	15	24	27	27	14	7
	0	7	8	17	26	26	26	14	8
	+ 1250	7	7	13	22	25	28	15	7
84	- 1250	13	11	17	28	37	39	17	8
	0	10	11	23	32	36	38	17	9
	+ 1250	10	9	15	25	34	41	18	8
108	- 1250	12	16	30	32	45	43	19	8
	0	10	15	29	36	46	45	19	9
	+ 1250	8	14	28	35	46	48	22	10

Pressure Drop (PD)

Pressure drops are reported in accordance with ASTM E477 methods and are based upon **ideal** flow conditions (5 diameters of straight duct on silencer inlet and 10 on outlet). Less than ideal conditions will result in an increase in pressure drop due to System Effects. See Silencer System Effects Data.

Length (in.)	Face Velocity (ft. per min) / Pressure Drop (in.w.g.)						
	500	750	1000	1250	1500	1750	2000
36	0.03	0.06	0.10	0.16	0.23	0.31	0.40
60	0.04	0.08	0.14	0.22	0.32	0.43	0.56
84	0.04	0.09	0.16	0.25	0.36	0.49	0.64
108	0.05	0.11	0.19	0.30	0.43	0.58	0.76

☐ Acceptable (0 - 0.35") ☐ Caution (>0.35") Pressure Drop may be too high for certain applications

Generated Noise (GN)

@ 5 sq.ft. face area

Length (in.)	Face Velocity (ft. per min)	Octave Band - Hz/Generated Noise (dB re 10^{-12} watts)							
		63	125	250	500	1K	2K	4K	8K
All	- 1250	54	51	49	50	51	53	44	33
	- 750	52	41	40	41	42	35	23	24
	+ 750	51	38	37	36	33	28	21	24
	+ 1250	56	52	48	46	46	46	39	31

GN correction chart at right must be used to correct GN to other face areas. →

Face Area (sq.ft.)	2.5	5	10	20	40	80
dB	-3	0	+3	+6	+9	+12

Cross Section Sizes*

"A" dimension (in.)
12
23-24
46-49
69-74
92-99
115-124
138-149
161-174
184-199
207-224
230-240

"B" dimension
ANY SIZE

Approx. weight
6.3 lbs/cu.ft.

See Rectangular Silencer Cross-Section Dimensions to ensure selection matches ductwork dimensions.

CERTIFIED PERFORMANCE DATA

VIBRO-ACOUSTICS®
A Swegon Group company

RFL-MV-F5

Rectangular Film Lined
Medium velocity silencer
(<1250 fpm)

How to Specify Example:

44 X **22** **RFL-MV-F5** X **60**

Duct Width	Duct Height	Silencer Model	Silencer Length

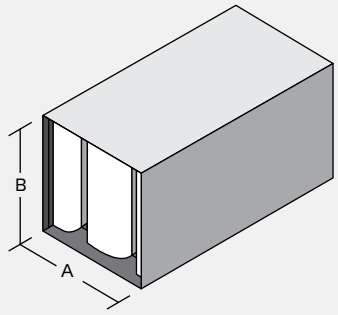

Insertion Loss (IL)

+ : "forward flow" where noise & airflow move in same direction (e.g. supply side)

- : "reverse flow" where noise & airflow move in opposite directions (e.g. return side)

See Silencer Selection Instructions. DIL above 50dB may be limited due to noise flanking around the silencer or along the duct walls. If more than 50dB DIL is required, contact your local Vibro-Acoustics Representative or call **1-800-565-8401**.

Length (in.)	Face Velocity (ft. per min)	Octave Band - Hz/Dynamic Insertion Loss (dB)							
		63	125	250	500	1000	2000	4000	8000
36	- 1250	4	6	12	19	19	17	13	6
	0	3	5	11	20	18	16	12	7
	+ 1250	3	4	10	18	18	17	13	6
60	- 1250	8	8	15	24	29	29	17	8
	0	6	8	17	26	28	28	17	8
	+ 1250	6	7	13	22	27	30	17	8
84	- 1250	12	11	18	30	39	40	21	9
	0	10	11	22	33	38	40	21	9
	+ 1250	9	9	15	27	36	43	22	9
108	- 1250	11	16	29	33	45	43	22	8
	0	9	14	27	36	46	46	24	10
	+ 1250	8	13	26	35	46	48	26	11

Pressure Drop (PD)

Pressure drops are reported in accordance with ASTM E477 methods and are based upon **ideal** flow conditions (5 diameters of straight duct on silencer inlet and 10 on outlet). Less than ideal conditions will result in an increase in pressure drop due to System Effects. See Silencer System Effects Data.

Length (in.)	Face Velocity (ft. per min) / Pressure Drop (in.w.g.)						
	500	750	1000	1250	1500	1750	2000
36	0.03	0.06	0.10	0.16	0.23	0.31	0.41
60	0.04	0.08	0.15	0.23	0.33	0.45	0.59
84	0.05	0.10	0.19	0.29	0.42	0.57	0.74
108	0.05	0.11	0.20	0.31	0.45	0.61	0.80

☐ Acceptable (0 - 0.35") ☐ Caution (>0.35") Pressure Drop may be too high for certain applications

Generated Noise (GN)

@ 5 sq.ft. face area

Length (in.)	Face Velocity (ft. per min)	Octave Band - Hz/Generated Noise (dB re 10^{-12} watts)							
		63	125	250	500	1K	2K	4K	8K
All	- 1250	54	51	49	50	51	53	44	34
	- 750	52	42	41	43	43	36	24	24
	+ 750	51	39	37	37	34	28	21	24
	+ 1250	56	52	48	46	46	46	39	32

GN correction chart at right must be used to correct GN to other face areas. →

Face Area (sq.ft.)	2.5	5	10	20	40	80
dB	-3	0	+3	+6	+9	+12

Cross Section Sizes*

"A" dimension (in.)
11
21-22
42-45
63-68
84-91
105-114
126-137
147-160
168-183
189-206
210-229
231-240

"B" dimension
ANY SIZE

Approx. weight
6.1 lbs/cu.ft.

See Rectangular Silencer Cross-Section Dimensions to ensure selection matches ductwork dimensions.

RFL-MV-F6

Rectangular Film Lined
Medium velocity silencer
(<1250 fpm)

How to Specify Example:

40 X **21** **RFL-MV-F6** X **60**

- 40 — Duct Width
- 21 — Duct Height
- RFL-MV-F6 — Silencer Model
- 60 — Silencer Length

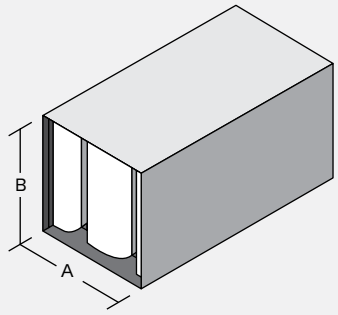

Insertion Loss (IL)

+ : "forward flow" where noise & airflow move in same direction (e.g. supply side)

- : "reverse flow" where noise & airflow move in opposite directions (e.g. return side)

See Silencer Selection Instructions. DIL above 50dB may be limited due to noise flanking around the silencer or along the duct walls. If more than 50dB DIL is required, contact your local Vibro-Acoustics Representative or call **1-800-565-8401**.

Length (in.)	Face Velocity (ft. per min)	Octave Band - Hz/Dynamic Insertion Loss (dB)							
		63	125	250	500	1000	2000	4000	8000
36	- 1250	4	5	11	19	20	19	14	7
	0	3	5	11	19	20	18	13	7
	+ 1250	3	4	10	17	20	19	14	7
60	- 1250	8	8	15	25	31	30	19	8
	0	6	8	16	26	30	30	20	9
	+ 1250	6	7	13	23	29	31	20	8
84	- 1250	11	11	18	31	41	42	25	10
	0	9	11	21	33	40	42	26	10
	+ 1250	9	9	16	28	38	44	27	10
108	- 1250	10	15	27	33	45	43	26	9
	0	9	13	26	36	47	47	28	10
	+ 1250	7	12	24	35	47	49	31	12

Pressure Drop (PD)

Pressure drops are reported in accordance with ASTM E477 methods and are based upon **ideal** flow conditions (5 diameters of straight duct on silencer inlet and 10 on outlet). Less than ideal conditions will result in an increase in pressure drop due to System Effects. See Silencer System Effects Data.

Length (in.)	Face Velocity (ft. per min) / Pressure Drop (in.w.g.)						
	500	750	1000	1250	1500	1750	2000
36	0.03	0.06	0.10	0.16	0.23	0.32	0.41
60	0.04	0.09	0.16	0.24	0.35	0.48	0.63
84	0.05	0.12	0.21	0.33	0.47	0.64	0.84
108	0.05	0.12	0.21	0.33	0.47	0.64	0.84

☐ Acceptable (0 - 0.35") ☐ Caution (>0.35") Pressure Drop may be too high for certain applications

Generated Noise (GN)

@ 5 sq.ft. face area

Length (in.)	Face Velocity (ft. per min)	Octave Band - Hz/Generated Noise (dB re 10^{-12} watts)							
		63	125	250	500	1K	2K	4K	8K
All	- 1250	54	51	48	50	51	54	45	34
	- 750	52	42	41	44	44	37	24	24
	+ 750	51	39	37	37	35	28	21	24
	+ 1250	56	52	48	47	46	46	39	32

GN correction chart at right must be used to correct GN to other face areas. →

Face Area (sq.ft.)	2.5	5	10	20	40	80
dB	-3	0	+3	+6	+9	+12

Cross Section Sizes*

"A" dimension (in.)
10
19-20
38-41
57-62
76-83
95-104
114-125
133-146
152-167
171-188
190-240

"B" dimension
ANY SIZE

Approx. weight
6.2 lbs/cu.ft.

See Rectangular Silencer Cross-Section Dimensions to ensure selection matches ductwork dimensions.

CERTIFIED PERFORMANCE DATA

VIBRO-ACOUSTICS®
A Swegon Group company

RFL-MV-F7

Rectangular Film Lined
Medium velocity silencer
(<1250 fpm)

How to Specify Example:

37 X **21** **RFL-MV-F7** X **60**

Duct Width	Duct Height	Silencer Model	Silencer Length

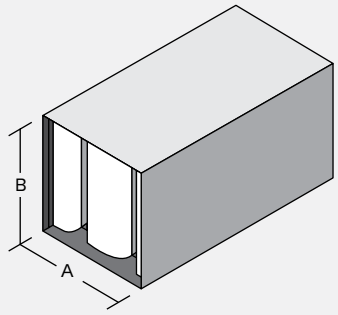

Insertion Loss (IL)

+ : "forward flow" where noise & airflow move in same direction (e.g. supply side)

- : "reverse flow" where noise & airflow move in opposite directions (e.g. return side)

See Silencer Selection Instructions. DIL above 50dB may be limited due to noise flanking around the silencer or along the duct walls. If more than 50dB DIL is required, contact your local Vibro-Acoustics Representative or call **1-800-565-8401**.

Length (in.)	Face Velocity (ft. per min)	Octave Band - Hz/Dynamic Insertion Loss (dB)							
		63	125	250	500	1000	2000	4000	8000
36	- 1250	4	5	11	19	22	20	15	7
	0	3	4	10	19	21	19	15	8
	+ 1250	3	4	9	17	21	20	16	7
60	- 1250	7	8	15	26	33	31	22	9
	0	6	7	15	26	31	32	22	9
	+ 1250	5	6	13	23	31	33	23	9
84	- 1250	11	11	19	32	43	43	29	10
	0	9	10	20	34	42	44	30	11
	+ 1250	8	9	16	29	40	46	31	11
108	- 1250	9	14	26	33	45	43	29	9
	0	8	13	24	37	47	48	33	11
	+ 1250	7	11	23	35	47	49	36	13

Pressure Drop (PD)

Pressure drops are reported in accordance with ASTM E477 methods and are based upon **ideal** flow conditions (5 diameters of straight duct on silencer inlet and 10 on outlet). Less than ideal conditions will result in an increase in pressure drop due to System Effects. See Silencer System Effects Data.

Length (in.)	Face Velocity (ft. per min) / Pressure Drop (in.w.g.)						
	500	750	1000	1250	1500	1750	2000
36	0.03	0.06	0.11	0.16	0.24	0.32	0.42
60	0.04	0.09	0.17	0.26	0.37	0.51	0.66
84	0.06	0.13	0.24	0.37	0.53	0.72	0.94
108	0.06	0.12	0.22	0.34	0.50	0.67	0.88

☐ Acceptable (0 - 0.35") ☐ Caution (>0.35") Pressure Drop may be too high for certain applications

Generated Noise (GN)

@ 5 sq.ft. face area

Length (in.)	Face Velocity (ft. per min)	Octave Band - Hz/Generated Noise (dB re 10^{-12} watts)							
		63	125	250	500	1K	2K	4K	8K
All	- 1250	54	51	48	50	52	54	45	35
	- 750	52	42	42	45	44	38	25	24
	+ 750	51	39	37	38	35	28	21	24
	+ 1250	56	52	48	47	46	46	39	33

GN correction chart at right must be used to correct GN to other face areas. →

Face Area (sq.ft.)	2.5	5	10	20	40	80
dB	-3	0	+3	+6	+9	+12

Cross Section Sizes*

"A" dimension (in.)
9
17-18
33-37
50-56
66-75
83-94
99-113
116-240

"B" dimension
ANY SIZE

Approx. weight
6.3 lbs/cu.ft.

See Rectangular Silencer Cross-Section Dimensions to ensure selection matches ductwork dimensions.

RFL-MV-F8

Rectangular Film Lined
Medium velocity silencer
(<1250 fpm)

How to Specify Example:

14 X **22** **RFL-MV-F8** X **60**

Duct Width | Duct Height | Silencer Model | Silencer Length

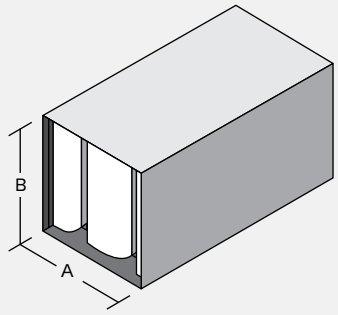

Insertion Loss (IL)

+ : "forward flow" where noise & airflow move in same direction (e.g. supply side)

- : "reverse flow" where noise & airflow move in opposite directions (e.g. return side)

See Silencer Selection Instructions. DIL above 50dB may be limited due to noise flanking around the silencer or along the duct walls. If more than 50dB DIL is required, contact your local Vibro-Acoustics Representative or call **1-800-565-8401**.

Length (in.)	Face Velocity (ft. per min)	Octave Band - Hz/Dynamic Insertion Loss (dB)							
		63	125	250	500	1000	2000	4000	8000
36	- 1250	4	6	10	17	20	21	20	12
	0	2	4	9	17	20	20	20	11
	+ 1250	3	4	8	16	19	20	21	11
60	- 1250	5	8	14	25	32	29	25	11
	0	4	7	13	24	32	30	26	12
	+ 1250	4	6	12	23	31	31	27	11
84	- 1250	7	10	19	33	44	38	30	11
	0	6	9	17	32	44	41	32	12
	+ 1250	5	8	16	31	43	41	33	12
108	- 1250	9	12	24	39	49	48	36	12
	0	7	11	22	41	55	52	39	14
	+ 1250	6	10	20	39	49	52	40	14

Pressure Drop (PD)

Pressure drops are reported in accordance with ASTM E477 methods and are based upon **ideal** flow conditions (5 diameters of straight duct on silencer inlet and 10 on outlet). Less than ideal conditions will result in an increase in pressure drop due to System Effects. See Silencer System Effects Data.

Length (in.)	Face Velocity (ft. per min) / Pressure Drop (in.w.g.)						
	500	750	1000	1250	1500	1750	2000
36	0.04	0.09	0.16	0.24	0.35	0.47	0.62
60	0.05	0.12	0.21	0.33	0.47	0.64	0.83
84	0.07	0.15	0.26	0.41	0.59	0.80	1.05
108	0.08	0.18	0.32	0.49	0.71	0.97	1.26

☐ Acceptable (0 - 0.35") ☐ Caution (>0.35") Pressure Drop may be too high for certain applications

Generated Noise (GN)

@ 5 sq.ft. face area

Length (in.)	Face Velocity (ft. per min)	Octave Band - Hz/Generated Noise (dB re 10^{-12} watts)							
		63	125	250	500	1K	2K	4K	8K
All	- 1250	54	51	48	50	52	54	45	35
	- 750	52	42	42	45	44	38	25	24
	+ 750	51	39	37	38	35	28	21	24
	+ 1250	56	52	48	47	46	46	39	33

GN correction chart at right must be used to correct GN to other face areas. →

Face Area (sq.ft.)	2.5	5	10	20	40	80
dB	-3	0	+3	+6	+9	+12

Cross Section Sizes*

"A" dimension (in.)
7-8
14-16
27-32
41-49
54-65
68-240

"B" dimension
ANY SIZE

Approx. weight
6.5 lbs/cu.ft.

See Rectangular Silencer Cross-Section Dimensions to ensure selection matches ductwork dimensions.

CERTIFIED PERFORMANCE DATA

VIBRO-ACOUSTICS®
A Swegon Group company

RFL-MV-F9

Rectangular Film Lined
Medium velocity silencer
(<1250 fpm)

How to Specify Example:

21 X **21** **RFL-MV-F9** X **60**

Duct Width	Duct Height	Silencer Model	Silencer Length

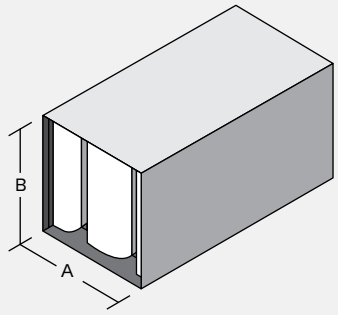

Insertion Loss (IL)

+ : "forward flow" where noise & airflow move in same direction (e.g. supply side)

- : "reverse flow" where noise & airflow move in opposite directions (e.g. return side)

See Silencer Selection Instructions. DIL above 50dB may be limited due to noise flanking around the silencer or along the duct walls. If more than 50dB DIL is required, contact your local Vibro-Acoustics Representative or call **1-800-565-8401**.

Length (in.)	Face Velocity (ft. per min)	Octave Band - Hz/Dynamic Insertion Loss (dB)							
		63	125	250	500	1000	2000	4000	8000
36	- 1250	4	4	9	18	26	24	18	8
	0	3	4	8	17	26	24	19	9
	+ 1250	3	3	8	16	25	24	20	9
60	- 1250	7	8	15	27	38	36	30	10
	0	5	6	13	27	37	37	31	11
	+ 1250	4	6	12	25	36	37	32	11
84	- 1250	9	11	20	36	50	47	42	13
	0	7	9	18	36	47	50	43	13
	+ 1250	6	9	17	33	47	50	44	13
108	- 1250	7	11	21	34	45	44	40	10
	0	7	10	19	38	49	50	46	13
	+ 1250	5	9	18	36	49	50	50	15

Pressure Drop (PD)

Pressure drops are reported in accordance with ASTM E477 methods and are based upon **ideal** flow conditions (5 diameters of straight duct on silencer inlet and 10 on outlet). Less than ideal conditions will result in an increase in pressure drop due to System Effects. See Silencer System Effects Data.

Length (in.)	Face Velocity (ft. per min) / Pressure Drop (in.w.g.)						
	500	750	1000	1250	1500	1750	2000
36	0.03	0.06	0.11	0.17	0.25	0.34	0.44
60	0.05	0.11	0.19	0.30	0.43	0.58	0.76
84	0.08	0.17	0.31	0.48	0.70	0.95	1.24
108	0.06	0.14	0.25	0.39	0.56	0.77	1.00

☐ Acceptable (0 - 0.35") ☐ Caution (>0.35") Pressure Drop may be too high for certain applications

Generated Noise (GN)

@ 5 sq.ft. face area

Length (in.)	Face Velocity (ft. per min)	Octave Band - Hz/Generated Noise (dB re 10^{-12} watts)							
		63	125	250	500	1K	2K	4K	8K
All	- 1250	54	51	47	50	53	56	47	37
	- 750	52	43	43	49	47	40	26	24
	+ 750	50	40	38	41	37	28	21	24
	+ 1250	57	53	48	48	47	45	39	35

GN correction chart at right must be used to correct GN to other face areas. →

Face Area (sq.ft.)	2.5	5	10	20	40	80
dB	-3	0	+3	+6	+9	+12

Cross Section Sizes*

"A" dimension (in.)
6
10-13
20-26
30-240

"B" dimension
ANY SIZE

Approx. weight
6.8 lbs/cu.ft.

See Rectangular Silencer Cross-Section Dimensions to ensure selection matches ductwork dimensions.

CERTIFIED PERFORMANCE DATA

VIBRO-ACOUSTICS®
A Swegon Group company

RFL-HV-F1

Rectangular Film Lined
High velocity silencer
(<2000 fpm)

How to Specify Example:

32 X **21** **RFL-HV-F1** X **60**

Duct Width	Duct Height	Silencer Model	Silencer Length

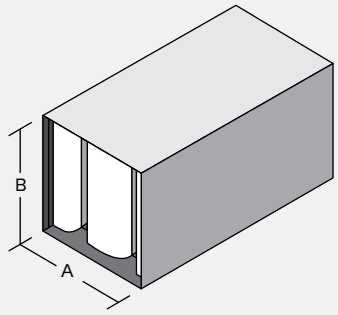

Insertion Loss (IL)

+ : "forward flow" where noise & airflow move in same direction (e.g. supply side)

- : "reverse flow" where noise & airflow move in opposite directions (e.g. return side)

See Silencer Selection Instructions. DIL above 50dB may be limited due to noise flanking around the silencer or along the duct walls. If more than 50dB DIL is required, contact your local Vibro-Acoustics representative or call **1-800-565-8401**.

Length (in.)	Face Velocity (ft. per min)	Octave Band - Hz/Dynamic Insertion Loss (dB)							
		63	125	250	500	1000	2000	4000	8000
36	- 2000	2	5	10	12	12	13	13	8
	0	2	4	9	11	11	11	11	7
	+ 2000	2	3	8	11	11	11	11	6
60	- 2000	5	7	11	14	18	19	13	8
	0	4	5	11	13	17	17	12	7
	+ 2000	4	5	10	13	17	17	13	7
84	- 2000	8	9	12	16	24	24	14	8
	0	7	7	12	15	22	22	14	8
	+ 2000	7	6	11	14	24	23	15	8
108	- 2000	10	11	16	20	29	28	16	8
	0	9	9	15	19	28	25	16	9
	+ 2000	8	8	14	18	29	27	17	9

Pressure Drop (PD)

Pressure drops are reported in accordance with ASTM E477 methods and are based upon **ideal** flow conditions (5 diameters of straight duct on silencer inlet and 10 on outlet). Less than ideal conditions will result in an increase in pressure drop due to System Effects. See Silencer System Effects Data.

Length (in.)	Face Velocity (ft. per min) / Pressure Drop (in.w.g.)						
	500	1000	1500	1750	2000	2250	2500
36	0.01	0.04	0.09	0.12	0.16	0.20	0.25
60	0.01	0.06	0.12	0.17	0.22	0.28	0.34
84	0.02	0.07	0.16	0.21	0.28	0.35	0.44
108	0.02	0.09	0.19	0.26	0.34	0.43	0.53

☐ Acceptable (0 - 0.35") ☐ Caution (>0.35") Pressure Drop may be too high for certain applications

Generated Noise (GN)

@ 5 sq.ft. face area

Length (in.)	Face Velocity (ft. per min)	Octave Band - Hz/Generated Noise (dB re 10^{-12} watts)							
		63	125	250	500	1K	2K	4K	8K
All	- 2000	58	54	54	53	54	55	47	38
	- 1250	54	49	47	47	47	44	33	26
	+ 1250	58	47	42	43	42	39	28	25
	+ 2000	60	56	52	52	51	53	46	36

GN correction chart at right must be used to correct GN to other face areas. →

Face Area (sq.ft.)	2.5	5	10	20	40	80
dB	-3	0	+3	+6	+9	+12

Cross Section Sizes*

"A" dimension (in.)
15-16
29-32
58-64
87-96
116-128
145-160
174-192
203-224
232-240

"B" dimension
ANY SIZE

Approx. weight
5.5 lbs/cu.ft.

See Rectangular Silencer Cross-Section Dimensions to ensure selection matches ductwork dimensions.

CERTIFIED PERFORMANCE DATA

VIBRO-ACOUSTICS®
A Swegon Group company

RFL-HV-F2

Rectangular Film Lined
High velocity silencer
(<2000 fpm)

How to Specify Example:

27 X **22** **RFL-HV-F2** X **60**

Duct Width	Duct Height	Silencer Model	Silencer Length

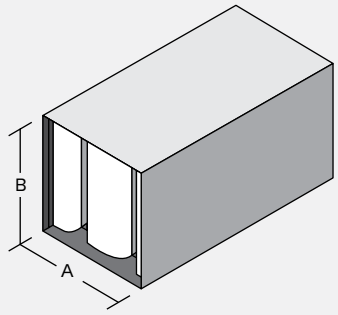

Insertion Loss (IL)

+ : "forward flow" where noise & airflow move in same direction (e.g. supply side)

- : "reverse flow" where noise & airflow move in opposite directions (e.g. return side)

See Silencer Selection Instructions. DIL above 50dB may be limited due to noise flanking around the silencer or along the duct walls. If more than 50dB DIL is required, contact your local Vibro-Acoustics representative or call **1-800-565-8401**.

Length (in.)	Face Velocity (ft. per min)	Octave Band - Hz/Dynamic Insertion Loss (dB)							
		63	125	250	500	1000	2000	4000	8000
36	- 2000	3	5	9	13	13	12	11	7
	0	2	4	9	13	11	11	10	6
	+ 2000	1	3	8	11	12	11	10	5
60	- 2000	6	6	10	15	19	19	13	7
	0	5	5	10	15	18	17	11	7
	+ 2000	4	4	9	13	18	18	12	6
84	- 2000	9	8	12	17	26	25	14	7
	0	7	7	12	17	25	24	13	7
	+ 2000	7	6	10	15	25	25	14	7
108	- 2000	10	10	15	22	32	29	15	8
	0	8	9	15	21	31	28	15	8
	+ 2000	7	8	14	20	32	29	16	8

Pressure Drop (PD)

Pressure drops are reported in accordance with ASTM E477 methods and are based upon **ideal** flow conditions (5 diameters of straight duct on silencer inlet and 10 on outlet). Less than ideal conditions will result in an increase in pressure drop due to System Effects. See Silencer System Effects Data.

Length (in.)	Face Velocity (ft. per min) / Pressure Drop (in.w.g.)						
	500	1000	1500	1750	2000	2250	2500
36	0.01	0.04	0.09	0.12	0.16	0.20	0.25
60	0.01	0.05	0.12	0.16	0.21	0.27	0.33
84	0.02	0.07	0.16	0.21	0.28	0.35	0.44
108	0.02	0.08	0.18	0.25	0.32	0.41	0.50

☐ Acceptable (0 - 0.35") ☐ Caution (>0.35") Pressure Drop may be too high for certain applications

Cross Section Sizes*
"A" dimension (in.)
14
27-28
54-57
81-86
108-115
135-144
162-173
189-202
216-231
"B" dimension
ANY SIZE
Approx. weight
5.4 lbs/cu.ft.
See Rectangular Silencer Cross-Section Dimensions to ensure selection matches ductwork dimensions.

Generated Noise (GN)

@ 5 sq.ft. face area

Length (in.)	Face Velocity (ft. per min)	Octave Band - Hz/Generated Noise (dB re 10^{-12} watts)							
		63	125	250	500	1K	2K	4K	8K
All	- 2000	58	55	54	54	55	56	47	38
	- 1250	53	50	47	48	47	44	33	26
	+ 1250	57	48	42	43	42	39	28	25
	+ 2000	60	57	53	52	51	53	47	37

GN correction chart at right must be used to correct GN to other face areas. →

Face Area (sq.ft.)	2.5	5	10	20	40	80
dB	-3	0	+3	+6	+9	+12

CERTIFIED PERFORMANCE DATA

VIBRO-ACOUSTICS®
A Swegon Group company

RFL-HV-F3

Rectangular Film Lined
High velocity silencer
(<2000 fpm)

How to Specify Example:

25 X **21** **RFL-HV-F3** X **60**

Duct Width	Duct Height	Silencer Model	Silencer Length

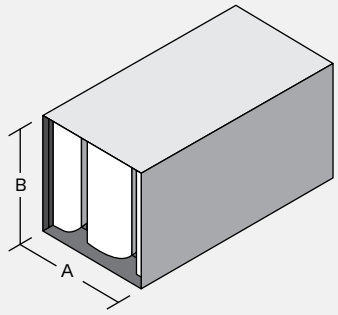

Insertion Loss (IL)

+ : "forward flow" where noise & airflow move in same direction (e.g. supply side)

- : "reverse flow" where noise & airflow move in opposite directions (e.g. return side)

See Silencer Selection Instructions. DIL above 50dB may be limited due to noise flanking around the silencer or along the duct walls. If more than 50dB DIL is required, contact your local Vibro-Acoustics representative or call **1-800-565-8401**.

Length (in.)	Face Velocity (ft. per min)	Octave Band - Hz/Dynamic Insertion Loss (dB)							
		63	125	250	500	1000	2000	4000	8000
36	- 2000	3	4	9	13	13	12	10	6
	0	2	3	9	14	12	11	9	6
	+ 2000	1	3	7	12	13	11	9	5
60	- 2000	7	6	10	15	21	19	12	6
	0	5	5	10	16	19	18	11	6
	+ 2000	4	4	8	14	19	19	12	6
84	- 2000	10	8	11	17	28	26	14	7
	0	8	7	11	18	27	25	12	7
	+ 2000	7	6	9	15	26	28	14	6
108	- 2000	9	10	15	24	36	31	15	7
	0	7	9	14	23	34	30	14	8
	+ 2000	6	8	13	22	35	32	15	8

Pressure Drop (PD)

Pressure drops are reported in accordance with ASTM E477 methods and are based upon **ideal** flow conditions (5 diameters of straight duct on silencer inlet and 10 on outlet). Less than ideal conditions will result in an increase in pressure drop due to System Effects. See Silencer System Effects Data.

Length (in.)	Face Velocity (ft. per min) / Pressure Drop (in.w.g.)						
	500	1000	1500	1750	2000	2250	2500
36	0.01	0.04	0.09	0.12	0.16	0.20	0.25
60	0.01	0.05	0.12	0.16	0.21	0.26	0.32
84	0.02	0.07	0.16	0.21	0.28	0.35	0.44
108	0.02	0.08	0.17	0.23	0.30	0.38	0.47

☐ Acceptable (0 - 0.35") ☐ Caution (>0.35") Pressure Drop may be too high for certain applications

Generated Noise (GN)

@ 5 sq.ft. face area

Length (in.)	Face Velocity (ft. per min)	Octave Band - Hz/Generated Noise (dB re 10^{-12} watts)							
		63	125	250	500	1K	2K	4K	8K
All	- 2000	57	55	55	54	55	56	48	38
	- 1250	53	50	47	48	48	44	33	25
	+ 1250	57	49	43	43	42	40	29	25
	+ 2000	59	58	54	52	51	53	47	38

GN correction chart at right must be used to correct GN to other face areas. →

Face Area (sq.ft.)	2.5	5	10	20	40	80
dB	-3	0	+3	+6	+9	+12

Cross Section Sizes*

"A" dimension (in.)
13
25-26
50-53
75-80
100-107
125-134
150-161
175-188
200-215
225-240

"B" dimension
ANY SIZE

Approx. weight
5.6 lbs/cu.ft.

See Rectangular Silencer Cross-Section Dimensions to ensure selection matches ductwork dimensions.

CERTIFIED PERFORMANCE DATA

VIBRO-ACOUSTICS®
A Swegon Group company

RFL-HV-F4

Rectangular Film Lined
High velocity silencer
(<2000 fpm)

How to Specify Example:

47 X **22** **RFL-HV-F4** X **60**

Duct Width	Duct Height	Silencer Model	Silencer Length

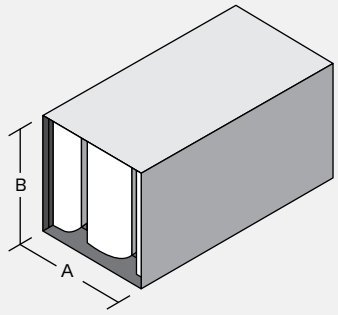

Insertion Loss (IL)

+ : "forward flow" where noise & airflow move in same direction (e.g. supply side)

- : "reverse flow" where noise & airflow move in opposite directions (e.g. return side)

See Silencer Selection Instructions. DIL above 50dB may be limited due to noise flanking around the silencer or along the duct walls. If more than 50dB DIL is required, contact your local Vibro-Acoustics representative or call **1-800-565-8401**.

Length (in.)	Face Velocity (ft. per min)	Octave Band - Hz/Dynamic Insertion Loss (dB)							
		63	125	250	500	1000	2000	4000	8000
36	- 2000	3	4	8	13	14	11	9	5
	0	2	3	8	15	13	10	8	5
	+ 2000	1	3	7	12	13	11	8	4
60	- 2000	7	6	9	16	22	19	11	6
	0	5	5	10	18	21	19	10	6
	+ 2000	4	4	7	14	20	21	11	5
84	- 2000	11	7	10	18	31	27	14	7
	0	8	7	11	20	29	27	12	6
	+ 2000	8	5	8	16	27	30	13	6
108	- 2000	8	10	15	26	37	32	14	6
	0	6	8	14	25	37	32	13	7
	+ 2000	5	8	13	24	38	34	14	7

Pressure Drop (PD)

Pressure drops are reported in accordance with ASTM E477 methods and are based upon **ideal** flow conditions (5 diameters of straight duct on silencer inlet and 10 on outlet). Less than ideal conditions will result in an increase in pressure drop due to System Effects. See Silencer System Effects Data.

Length (in.)	Face Velocity (ft. per min) / Pressure Drop (in.w.g.)						
	500	1000	1500	1750	2000	2250	2500
36	0.01	0.04	0.09	0.12	0.16	0.20	0.25
60	0.01	0.05	0.11	0.15	0.20	0.25	0.31
84	0.02	0.07	0.16	0.21	0.28	0.35	0.44
108	0.02	0.07	0.16	0.21	0.28	0.35	0.44

☐ Acceptable (0 - 0.35") ☐ Caution (>0.35") Pressure Drop may be too high for certain applications

Generated Noise (GN)

@ 5 sq.ft. face area

Length (in.)	Face Velocity (ft. per min)	Octave Band - Hz/Generated Noise (dB re 10^{-12} watts)							
		63	125	250	500	1K	2K	4K	8K
All	- 2000	56	56	55	54	55	56	48	37
	- 1250	53	50	47	48	48	44	32	25
	+ 1250	56	49	44	43	42	40	29	25
	+ 2000	59	59	54	52	51	54	48	39

GN correction chart at right must be used to correct GN to other face areas. →

Face Area (sq.ft.)	2.5	5	10	20	40	80
dB	-3	0	+3	+6	+9	+12

Cross Section Sizes*

"A" dimension (in.)
12
23-24
46-49
69-74
92-99
115-124
138-149
161-174
184-199
207-224
230-240

"B" dimension
ANY SIZE

Approx. weight
5.7 lbs/cu.ft.

See Rectangular Silencer Cross-Section Dimensions to ensure selection matches ductwork dimensions.

CERTIFIED PERFORMANCE DATA

VIBRO-ACOUSTICS®
A Swegon Group company

RFL-HV-F5

Rectangular Film Lined
High velocity silencer
(<2000 fpm)

How to Specify Example:

44 X **22** **RFL-HV-F5** X **60**

Duct Width	Duct Height	Silencer Model	Silencer Length

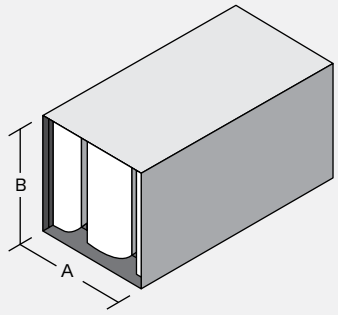

Insertion Loss (IL)

+ : "forward flow" where noise & airflow move in same direction (e.g. supply side)

- : "reverse flow" where noise & airflow move in opposite directions (e.g. return side)

See Silencer Selection Instructions. DIL above 50dB may be limited due to noise flanking around the silencer or along the duct walls. If more than 50dB DIL is required, contact your local Vibro-Acoustics representative or call **1-800-565-8401**.

Length (in.)	Face Velocity (ft. per min)	Octave Band - Hz/Dynamic Insertion Loss (dB)							
		63	125	250	500	1000	2000	4000	8000
36	- 2000	3	4	8	13	15	14	10	5
	0	2	3	8	14	13	13	9	5
	+ 2000	1	3	7	11	14	14	10	4
60	- 2000	7	6	9	16	24	22	13	6
	0	5	5	10	18	22	21	12	6
	+ 2000	4	4	7	14	21	23	13	5
84	- 2000	11	7	10	20	32	30	16	7
	0	8	7	11	21	31	30	14	7
	+ 2000	7	5	8	17	28	32	16	6
108	- 2000	8	10	15	27	38	34	16	6
	0	6	8	14	25	38	34	15	7
	+ 2000	4	7	13	24	39	37	17	8

Pressure Drop (PD)

Pressure drops are reported in accordance with ASTM E477 methods and are based upon **ideal** flow conditions (5 diameters of straight duct on silencer inlet and 10 on outlet). Less than ideal conditions will result in an increase in pressure drop due to System Effects. See Silencer System Effects Data.

Length (in.)	Face Velocity (ft. per min) / Pressure Drop (in.w.g.)						
	500	1000	1500	1750	2000	2250	2500
36	0.01	0.04	0.09	0.12	0.16	0.20	0.25
60	0.01	0.05	0.12	0.16	0.21	0.26	0.32
84	0.02	0.08	0.17	0.23	0.31	0.39	0.48
108	0.02	0.07	0.17	0.22	0.29	0.37	0.46

☐ Acceptable (0 - 0.35") ☐ Caution (>0.35") Pressure Drop may be too high for certain applications

Generated Noise (GN)

@ 5 sq.ft. face area

Length (in.)	Face Velocity (ft. per min)	Octave Band - Hz/Generated Noise (dB re 10^{-12} watts)							
		63	125	250	500	1K	2K	4K	8K
All	- 2000	56	55	55	55	55	57	49	39
	- 1250	53	50	47	48	48	45	33	25
	+ 1250	56	49	44	44	43	40	29	25
	+ 2000	59	59	54	53	52	53	48	40

GN correction chart at right must be used to correct GN to other face areas. →

Face Area (sq.ft.)	2.5	5	10	20	40	80
dB	-3	0	+3	+6	+9	+12

Cross Section Sizes*

"A" dimension (in.)
11
21-22
42-45
63-68
84-91
105-114
126-137
147-160
168-183
189-206
210-229
231-240

"B" dimension
ANY SIZE

Approx. weight
5.5 lbs/cu.ft.

See Rectangular Silencer Cross-Section Dimensions to ensure selection matches ductwork dimensions.

RFL-HV-F6

Rectangular Film Lined
High velocity silencer
(<2000 fpm)

How to Specify Example:

40 X **21** **RFL-HV-F6** X **60**

Duct Width | Duct Height | Silencer Model | Silencer Length

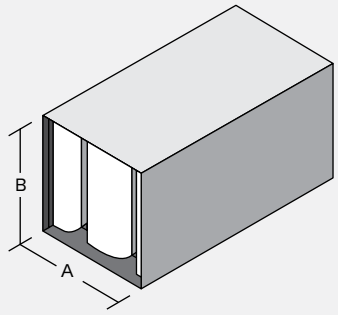

Insertion Loss (IL)

+ : "forward flow" where noise & airflow move in same direction (e.g. supply side)

- : "reverse flow" where noise & airflow move in opposite directions (e.g. return side)

See Silencer Selection Instructions. DIL above 50dB may be limited due to noise flanking around the silencer or along the duct walls. If more than 50dB DIL is required, contact your local Vibro-Acoustics representative or call **1-800-565-8401**.

Length (in.)	Face Velocity (ft. per min)	Octave Band - Hz/Dynamic Insertion Loss (dB)							
		63	125	250	500	1000	2000	4000	8000
36	- 2000	3	4	7	12	15	16	11	5
	0	2	3	8	14	14	15	10	5
	+ 2000	1	3	6	11	14	16	11	4
60	- 2000	7	6	9	16	25	24	15	6
	0	5	5	10	18	24	24	13	6
	+ 2000	4	4	7	15	22	26	14	5
84	- 2000	10	7	11	21	34	32	18	8
	0	7	7	12	22	33	33	16	7
	+ 2000	7	6	9	18	30	35	18	7
108	- 2000	7	10	15	27	39	36	18	7
	0	6	8	14	26	39	37	17	7
	+ 2000	4	7	12	24	39	39	20	8

Pressure Drop (PD)

Pressure drops are reported in accordance with ASTM E477 methods and are based upon **ideal** flow conditions (5 diameters of straight duct on silencer inlet and 10 on outlet). Less than ideal conditions will result in an increase in pressure drop due to System Effects. See Silencer System Effects Data.

Length (in.)	Face Velocity (ft. per min) / Pressure Drop (in.w.g.)						
	500	1000	1500	1750	2000	2250	2500
36	0.01	0.04	0.09	0.12	0.16	0.20	0.25
60	0.01	0.05	0.12	0.16	0.21	0.27	0.33
84	0.02	0.08	0.19	0.26	0.33	0.42	0.52
108	0.02	0.08	0.17	0.23	0.31	0.39	0.48

☐ Acceptable (0 - 0.35") ☐ Caution (>0.35") Pressure Drop may be too high for certain applications

Generated Noise (GN)

@ 5 sq.ft. face area

Length (in.)	Face Velocity (ft. per min)	Octave Band - Hz/Generated Noise (dB re 10^{-12} watts)							
		63	125	250	500	1K	2K	4K	8K
All	- 2000	56	55	56	55	55	58	50	40
	- 1250	52	50	47	48	49	46	34	26
	+ 1250	56	49	44	44	43	39	29	25
	+ 2000	59	58	55	53	52	53	48	41

GN correction chart at right must be used to correct GN to other face areas. →

Face Area (sq.ft.)	2.5	5	10	20	40	80
dB	-3	0	+3	+6	+9	+12

Cross Section Sizes*

"A" dimension (in.)
10
19-20
38-41
57-62
76-83
95-104
114-125
133-146
152-167
171-188
190-240

"B" dimension
ANY SIZE

Approx. weight
5.6 lbs/cu.ft.

See Rectangular Silencer Cross-Section Dimensions to ensure selection matches ductwork dimensions.

RFL-HV-F7

Rectangular Film Lined
High velocity silencer
(<2000 fpm)

How to Specify Example:

37 X **21** **RFL-HV-F7** X **60**

Duct Width	Duct Height	Silencer Model	Silencer Length

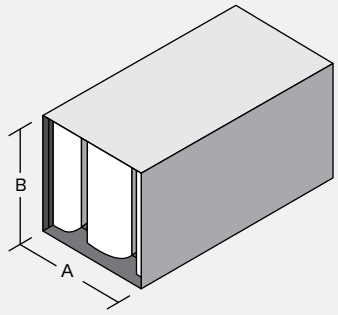

Insertion Loss (IL)

+ : "forward flow" where noise & airflow move in same direction (e.g. supply side)

- : "reverse flow" where noise & airflow move in opposite directions (e.g. return side)

See Silencer Selection Instructions. DIL above 50dB may be limited due to noise flanking around the silencer or along the duct walls. If more than 50dB DIL is required, contact your local Vibro-Acoustics representative or call **1-800-565-8401**.

Length (in.)	Face Velocity (ft. per min)	Octave Band - Hz/Dynamic Insertion Loss (dB)							
		63	125	250	500	1000	2000	4000	8000
36	- 2000	3	4	7	12	16	19	12	5
	0	2	3	7	13	15	17	11	5
	+ 2000	1	3	6	10	15	18	12	4
60	- 2000	6	6	9	17	26	27	16	7
	0	5	5	9	18	25	27	15	6
	+ 2000	4	4	7	15	23	28	16	6
84	- 2000	10	8	12	22	36	35	20	8
	0	7	7	12	23	36	36	19	8
	+ 2000	6	6	9	19	32	38	21	7
108	- 2000	7	9	15	27	39	38	19	7
	0	6	8	13	26	41	39	19	8
	+ 2000	4	7	12	25	40	41	22	9

Pressure Drop (PD)

Pressure drops are reported in accordance with ASTM E477 methods and are based upon **ideal** flow conditions (5 diameters of straight duct on silencer inlet and 10 on outlet). Less than ideal conditions will result in an increase in pressure drop due to System Effects. See Silencer System Effects Data.

Length (in.)	Face Velocity (ft. per min) / Pressure Drop (in.w.g.)						
	500	1000	1500	1750	2000	2250	2500
36	0.01	0.04	0.09	0.12	0.16	0.20	0.25
60	0.01	0.06	0.12	0.17	0.22	0.28	0.34
84	0.02	0.09	0.20	0.28	0.36	0.46	0.56
108	0.02	0.08	0.18	0.25	0.32	0.41	0.50

☐ Acceptable (0 - 0.35") ☐ Caution (>0.35") Pressure Drop may be too high for certain applications

Generated Noise (GN)

@ 5 sq.ft. face area

Length (in.)	Face Velocity (ft. per min)	Octave Band - Hz/Generated Noise (dB re 10^{-12} watts)							
		63	125	250	500	1K	2K	4K	8K
All	- 2000	56	55	56	55	56	58	52	41
	- 1250	52	50	46	48	49	47	35	26
	+ 1250	56	49	44	45	44	39	29	25
	+ 2000	59	58	55	54	53	53	48	42

GN correction chart at right must be used to correct GN to other face areas. →

Face Area (sq.ft.)	2.5	5	10	20	40	80
dB	-3	0	+3	+6	+9	+12

Cross Section Sizes*
"A" dimension (in.)
9
17-18
33-37
50-56
66-75
83-94
99-113
116-240
"B" dimension
ANY SIZE
Approx. weight
5.7 lbs/cu.ft.
See Rectangular Silencer Cross-Section Dimensions to ensure selection matches ductwork dimensions.

CERTIFIED PERFORMANCE DATA

VIBRO-ACOUSTICS®
A Swegon Group company

RFL-HV-F8

Rectangular Film Lined
High velocity silencer
(<2000 fpm)

How to Specify Example:

14 X **22** **RFL-HV-F8** X **60**

Duct Width	Duct Height	Silencer Model	Silencer Length

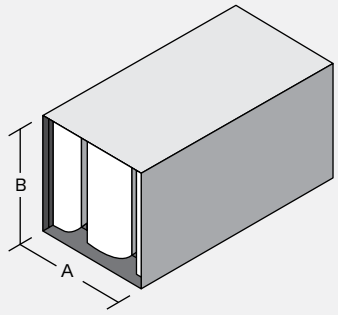

Insertion Loss (IL)

+ : "forward flow" where noise & airflow move in same direction (e.g. supply side)

- : "reverse flow" where noise & airflow move in opposite directions (e.g. return side)

See Silencer Selection Instructions. DIL above 50dB may be limited due to noise flanking around the silencer or along the duct walls. If more than 50dB DIL is required, contact your local Vibro-Acoustics representative or call **1-800-565-8401**.

Length (in.)	Face Velocity (ft. per min)	Octave Band - Hz/Dynamic Insertion Loss (dB)							
		63	125	250	500	1000	2000	4000	8000
36	- 2000	2	4	7	11	14	21	17	8
	0	1	3	6	10	14	20	17	8
	+ 2000	1	3	5	9	14	20	17	8
60	- 2000	5	5	10	17	25	24	18	8
	0	3	4	9	17	24	25	19	9
	+ 2000	3	4	8	15	24	26	19	8
84	- 2000	7	6	13	24	35	28	18	8
	0	5	6	12	23	34	30	20	9
	+ 2000	5	5	11	22	34	31	21	9
108	- 2000	9	8	17	31	42	35	21	9
	0	7	7	15	30	44	37	24	10
	+ 2000	7	6	14	28	42	39	25	10

Pressure Drop (PD)

Pressure drops are reported in accordance with ASTM E477 methods and are based upon **ideal** flow conditions (5 diameters of straight duct on silencer inlet and 10 on outlet). Less than ideal conditions will result in an increase in pressure drop due to System Effects. See Silencer System Effects Data.

Length (in.)	Face Velocity (ft. per min) / Pressure Drop (in.w.g.)						
	500	1000	1500	1750	2000	2250	2500
36	0.01	0.05	0.10	0.14	0.18	0.23	0.28
60	0.02	0.07	0.15	0.21	0.27	0.34	0.42
84	0.02	0.09	0.20	0.28	0.36	0.46	0.56
108	0.03	0.11	0.25	0.34	0.45	0.57	0.70

☐ Acceptable (0 - 0.35") ☐ Caution (>0.35") Pressure Drop may be too high for certain applications

Generated Noise (GN)

@ 5 sq.ft. face area

Length (in.)	Face Velocity (ft. per min)	Octave Band - Hz/Generated Noise (dB re 10^{-12} watts)							
		63	125	250	500	1K	2K	4K	8K
All	- 2000	58	55	56	56	57	58	53	45
	- 1250	53	47	47	49	48	46	35	28
	+ 1250	57	47	43	46	45	36	27	26
	+ 2000	60	57	54	55	55	51	46	40

GN correction chart at right must be used to correct GN to other face areas. →

Face Area (sq.ft.)	2.5	5	10	20	40	80
dB	-3	0	+3	+6	+9	+12

Cross Section Sizes*
"A" dimension (in.) 7-8 14-16 27-32 41-49 54-65 68-240
"B" dimension ANY SIZE
Approx. weight 6.0 lbs/cu.ft.
See Rectangular Silencer Cross-Section Dimensions to ensure selection matches ductwork dimensions.

RFL-HV-F9

Rectangular Film Lined
High velocity silencer
(<2000 fpm)

How to Specify Example:

21 X **21** **RFL-HV-F9** X **60**

Duct Width | Duct Height | Silencer Model | Silencer Length

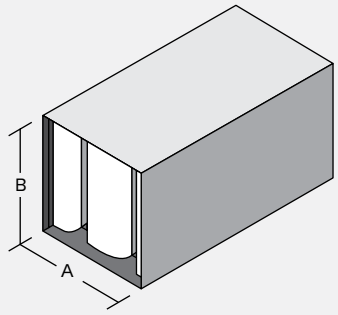

Insertion Loss (IL)

+ : "forward flow" where noise & airflow move in same direction (e.g. supply side)

- : "reverse flow" where noise & airflow move in opposite directions (e.g. return side)

See Silencer Selection Instructions. DIL above 50dB may be limited due to noise flanking around the silencer or along the duct walls. If more than 50dB DIL is required, contact your local Vibro-Acoustics representative or call **1-800-565-8401**.

Length (in.)	Face Velocity (ft. per min)	Octave Band - Hz/Dynamic Insertion Loss (dB)							
		63	125	250	500	1000	2000	4000	8000
36	- 2000	2	4	6	10	18	26	15	6
	0	2	3	6	11	18	24	14	6
	+ 2000	1	3	4	8	16	25	15	5
60	- 2000	5	6	10	18	29	35	21	8
	0	4	5	9	19	30	34	20	7
	+ 2000	3	4	7	15	26	35	21	7
84	- 2000	8	8	14	26	41	44	27	10
	0	6	7	13	26	42	45	26	9
	+ 2000	5	6	10	22	36	45	28	9
108	- 2000	6	8	15	29	41	44	25	8
	0	6	7	13	27	44	46	26	8
	+ 2000	4	6	11	25	42	48	30	10

Pressure Drop (PD)

Pressure drops are reported in accordance with ASTM E477 methods and are based upon **ideal** flow conditions (5 diameters of straight duct on silencer inlet and 10 on outlet). Less than ideal conditions will result in an increase in pressure drop due to System Effects. See Silencer System Effects Data.

Length (in.)	Face Velocity (ft. per min) / Pressure Drop (in.w.g.)						
	500	1000	1500	1750	2000	2250	2500
36	0.01	0.04	0.09	0.12	0.16	0.20	0.25
60	0.02	0.06	0.14	0.18	0.24	0.30	0.38
84	0.03	0.11	0.25	0.34	0.44	0.56	0.69
108	0.02	0.09	0.20	0.28	0.36	0.46	0.56

☐ Acceptable (0 - 0.35") ☐ Caution (>0.35") Pressure Drop may be too high for certain applications

Cross Section Sizes*
"A" dimension (in.) 6 10-13 20-26 30-240
"B" dimension ANY SIZE
Approx. weight 6.3 lbs/cu.ft.
See Rectangular Silencer Cross-Section Dimensions to ensure selection matches ductwork dimensions.

Generated Noise (GN)

@ 5 sq.ft. face area

Length (in.)	Face Velocity (ft. per min)	Octave Band - Hz/Generated Noise (dB re 10^{-12} watts)							
		63	125	250	500	1K	2K	4K	8K
All	- 2000	53	55	57	55	56	60	55	45
	- 1250	52	49	45	48	50	49	38	27
	+ 1250	56	48	43	46	45	38	29	26
	+ 2000	59	58	55	55	54	52	48	44

GN correction chart at right must be used to correct GN to other face areas. →

Face Area (sq.ft.)	2.5	5	10	20	40	80
dB	-3	0	+3	+6	+9	+12

CFL

Circular Film lined
Straight Silencers

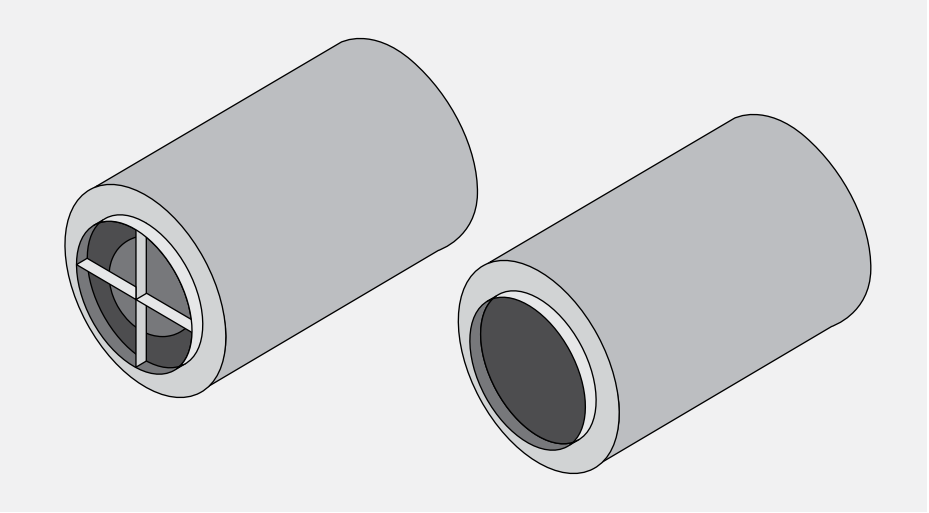

Description

VIBRO-ACOUSTICS' CFL SILENCERS use acoustic grade glass fiber as the principal sound-absorbing mechanism. The glass fiber is protected by a film liner and perforated metal. The CFL models also incorporate film lined glass fiber external to the duct connection size.

An acoustical spacer between the film liner and the perforated metal helps reduce the acoustic performance degradation caused by the film liner. Some models incorporate a bullet shaped center body held in place and centered by trusses. Duct outer diameter and gap factor also vary depending on the pressure drop and attenuation requirements.

Model Names

Vibro-Acoustics' silencer model names are coded to help identify their recommended application range.

*The lower the Frequency Indicator, the better the silencer's insertion loss in the low frequency range.

Circular CFL - ___ - ___

Silencer Type

Velocity Range
LV, MV, HV, UHV

Frequency Indicator*
F1, F2

Applications

> Wherever glass fiber is not desirable in direct contact with the airstream (e.g. health care, laboratory and clean room etc.)
> In supply, return and exhaust ductwork
> In fan plenums and air handling units (both supply and return)
> On cooling towers, air-cooled chillers, etc.
> On the receiver side of valves, dampers, terminal boxes, etc.
> Economical substitution for acoustically lined duct
> Normal recommended duct velocity range

CFL-LV	0-1500 fpm	CFL-HV	3000-5000 fpm
CFL-MV	1500-3000 fpm	CFL-UHV	5000-7000 fpm

Features and Benefits

> Greatly reduces the potential for glass fiber particles to enter the airstream

> Prevents contamination sources from entering the silencer media

> Available in any diameter to “fit-the-duct”

> Can be selected to suit the acoustic, space, or energy-cost requirements

> Construction quality and aerodynamic design optimized to give reliable performance, best acoustics, lowest pressure drop and lowest overall cost

> Designs can be optimized to minimize extra pressure losses due to poor inlet or discharge flow conditions (e.g. near fans, elbows, etc.)

> When break-out noise is of prime concern CFL silencers may be appropriate selections. They may require mass/stiffness added to their outer casing. Refer to Silencer Selection Instructions for proper silencer location.

Cautions/When Not to Use CFL Silencers

> When 3-5 equivalent duct diameters of straight, unobstructed duct are not available on both the silencer’s inlet or discharge; consider using Elbow Silencers, Transitional Silencers or Fan Silencers

> When no acoustical media whatsoever is acceptable in the airstream, consider No-Media Silencers

> The acoustic performance of CFL silencers is generally less than CD silencers. Longer lengths may be required to achieve the insertion loss required.

Performance Data/Testing

See Performance Data section.
Vibro-Acoustics’ 5th generation aero-acoustic laboratory was the first laboratory to be NVLAP accredited (Lab Code 100424-0) for the ASTM E-477 silencer test code. NVLAP is administered by the U.S. Dept. of Commerce.

Silencer Selection and Location

Vibro-Acoustics offers multiple selection methods, from our complete analysis service to Do-It-Yourself quick selections. Refer to Silencer Selection Instructions for details.

Standard Construction Features

> Galvanized, lockformed casings for class I construction

> Galvanized or prime painted mild steel, stitchwelded and sealed casings for class II construction

> Prime painted, mild steel continuously welded casings for class III construction

> 2” slip connection at each end

> Centerbody “bullet” centered and supported in airstream by steel struts

> Centerbodies have either spun aerodynamic noses or truncated nose cones

> Centerbodies have perforated diffuser tail sections

> Casing and centerbodies filled with acoustic grade glass fiber under minimum 15% compression

> Glass fiber carefully wrapped in Vibar™ film with lap joints away from splitter to reduce potential tearing of the Vibar™

> 0.5 inch deep corrugated honeycomb “stand-off” spacer sheet placed between the perforated metal and the film

Special Construction Options

> Heavier gauge casings and perforated metal

> Continuously welded casings

> Special materials (e.g. stainless steel, aluminum)

> Flanges

> Access doors

> High transmission loss (HTL) casings to prevent break-out/break-in noise

> Built in transitions

> Removable splitters

> Flow measuring stations

> For details of above and more special options see Special Construction Options.

CERTIFIED PERFORMANCE DATA

VIBRO-ACOUSTICS®
A Swegon Group company

CFL-LV-F1

Circular Film Lined
Low velocity silencer
(<1500 fpm)

How to Specify Example:

24 X **CFL-LV-F1** X **72**

- **24** — Duct Connection Size
- **CFL-LV-F1** — Silencer Model
- **72** — Silencer Length

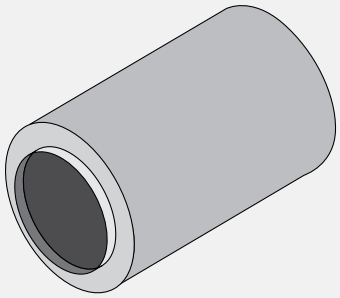

Insertion Loss (IL)

+ : "forward flow" where noise & airflow move in same direction (e.g. supply side)

- : "reverse flow" where noise & airflow move in opposite directions (e.g. return side)

DC Size - Duct Connection Size (in.)

SL - Silencer Length (in.)

FV - Face Velocity (ft. per min)

SO Dia. - Silencer Outer Diameter (in.)

See Silencer Selection Instructions. DIL above 50dB may be limited due to noise flanking around the silencer or along the duct walls. If more than 50dB DIL is required, contact your local Vibro-Acoustics representative or call **1-800-565-8401**.

DC Size (in.)	SL (in.)	FV (ft. per min)	Octave Band - Hz/Dynamic Insertion Loss (dB)							
			63	125	250	500	1000	2000	4000	8000
12	24	- 1000	6	9	14	20	30	44	49	20
		0	6	9	13	19	29	43	49	20
		+ 1000	6	9	12	19	27	42	49	20
24	48	- 1000	6	10	19	24	37	47	40	13
		0	6	10	19	24	35	46	40	13
		+ 1000	6	10	18	23	34	45	40	13
36	72	- 1000	9	14	23	30	37	39	27	10
		0	9	14	22	29	35	38	27	10
		+ 1000	9	14	21	28	34	37	27	10
48	96	- 1000	10	18	27	32	35	34	21	9
		0	10	18	27	32	34	33	21	9
		+ 1000	10	18	26	31	32	32	21	9
60	120	- 1000	11	20	28	33	34	30	19	9
		0	11	20	27	32	32	29	19	9
		+ 1000	11	20	27	32	30	28	19	9

DC Size (in.)	SL (in.)	FV (ft. per min)	Octave Band - Hz/Dynamic Insertion Loss (dB)							
			63	125	250	500	1000	2000	4000	8000
12	36	- 1000	7	13	20	30	44	60	60	30
		0	7	13	19	29	43	60	60	30
		+ 1000	7	13	19	28	41	60	60	30
24	72	- 1000	9	16	29	35	49	60	55	19
		0	9	16	28	35	48	59	55	19
		+ 1000	9	16	27	34	46	58	55	19
36	108	- 1000	11	21	34	42	49	56	41	15
		0	11	21	33	41	48	55	41	15
		+ 1000	11	21	32	40	46	54	41	15
48	144	- 1000	16	27	41	43	48	50	33	14
		0	16	27	40	42	46	49	33	14
		+ 1000	16	27	39	42	44	48	33	14
60	180	- 1000	16	29	43	45	48	44	29	13
		0	16	29	42	44	46	43	29	13
		+ 1000	16	29	41	43	44	42	29	13

Pressure Drop (PD)

Pressure drops are reported in accordance with ASTM E477 methods and are based upon **ideal** flow conditions (5 diameters of straight duct on silencer inlet and 10 on outlet). Less than ideal conditions will result in an increase in pressure drop due to System Effects. See Silencer System Effects Data.

☐ Acceptable (0 - 0.35")

▒ Caution (>0.35") Pressure Drop may be too high for certain applications

DC Size (in.)	SO Dia. (in.)	SL (in.)	Weight (lbs)	Face Velocity (ft. per min) / Pressure Drop (in.w.g.)						
				500	1000	1500	2000	2500	3000	3500
12	28	24	126	0.02	0.09	0.20	0.36	0.57	0.82	1.11
		36	164	0.04	0.15	0.33	0.59	0.92	1.33	1.81
24	40	48	363	0.02	0.08	0.19	0.33	0.52	0.74	1.01
		72	487	0.03	0.13	0.29	0.51	0.80	1.15	1.56
36	52	72	726	0.02	0.09	0.20	0.36	0.57	0.82	1.11
		108	995	0.03	0.12	0.27	0.48	0.74	1.07	1.46
48	64	96	1233	0.02	0.08	0.19	0.33	0.52	0.74	1.01
		144	1689	0.03	0.10	0.23	0.42	0.65	0.94	1.28
60	76	120	1890	0.02	0.08	0.19	0.33	0.52	0.74	1.01
		180	2599	0.03	0.10	0.23	0.40	0.63	0.90	1.23

Generated Noise (GN)

@ 3 sq.ft. face area

Length (in.)	Face Velocity (ft. per min)	Octave Band - Hz/Generated Noise (dB re 10^{-12} watts)							
		63	125	250	500	1000	2000	4000	8000
All	- 1500	62	54	50	48	46	47	44	46
	- 1000	57	49	45	43	41	42	39	41
	+ 1000	56	48	45	42	38	39	37	39
	+ 1500	61	53	50	47	43	44	42	44

GN correction chart at right must be used to correct GN to other face areas. →

Face Area (sq.ft.)	1.5	3	6	12	24	48
dB	-3	0	+3	+6	+9	+12

CFL-LV-F2

Circular Film Lined
Low velocity silencer
(<1500 fpm)

How to Specify Example:

24 X **CFL-LV-F2** X **72**

- **24** — Duct Connection Size
- **CFL-LV-F2** — Silencer Model
- **72** — Silencer Length

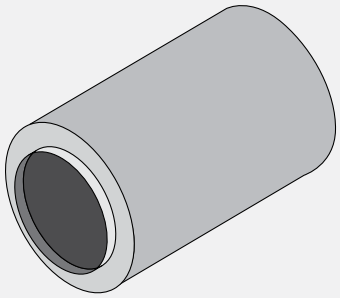

Insertion Loss (IL)

+ : "forward flow" where noise & airflow move in same direction (e.g. supply side)

- : "reverse flow" where noise & airflow move in opposite directions (e.g. return side)

DC Size - Duct Connection Size (in.)

SL - Silencer Length (in.)

FV - Face Velocity (ft. per min)

SO Dia. - Silencer Outer Diameter (in.)

See Silencer Selection Instructions. DIL above 50dB may be limited due to noise flanking around the silencer or along the duct walls. If more than 50dB DIL is required, contact your local Vibro-Acoustics representative or call **1-800-565-8401**.

DC Size (in.)	SL (in.)	FV (ft. per min)	Octave Band - Hz/Dynamic Insertion Loss (dB)							
			63	125	250	500	1000	2000	4000	8000
12	24	- 1000	3	6	12	20	30	44	49	20
		0	3	6	12	19	29	43	49	20
		+ 1000	3	6	11	19	27	42	49	20
24	48	- 1000	3	7	17	24	37	47	40	13
		0	3	7	16	24	35	46	40	13
		+ 1000	3	7	15	23	34	45	40	13
36	72	- 1000	5	10	20	30	37	39	27	10
		0	5	10	19	29	35	38	27	10
		+ 1000	5	10	18	28	34	37	27	10
48	96	- 1000	6	12	24	32	35	34	21	9
		0	6	12	23	32	34	33	21	9
		+ 1000	6	12	22	31	32	32	21	9
60	120	- 1000	7	13	25	33	34	30	19	9
		0	7	13	24	32	32	29	19	9
		+ 1000	7	13	23	32	30	28	19	9

DC Size (in.)	SL (in.)	FV (ft. per min)	Octave Band - Hz/Dynamic Insertion Loss (dB)							
			63	125	250	500	1000	2000	4000	8000
12	36	- 1000	4	9	18	30	44	60	60	30
		0	4	9	17	29	43	60	60	30
		+ 1000	4	9	16	28	41	60	60	30
24	72	- 1000	5	10	25	35	49	60	55	19
		0	5	10	25	35	48	59	55	19
		+ 1000	5	10	24	34	46	58	55	19
36	108	- 1000	7	14	29	42	49	56	41	15
		0	7	14	28	41	48	55	41	15
		+ 1000	7	14	28	40	46	54	41	15
48	144	- 1000	9	18	35	43	48	50	33	14
		0	9	18	35	42	46	49	33	14
		+ 1000	9	18	34	42	44	48	33	14
60	180	- 1000	9	19	37	45	48	44	29	13
		0	9	19	36	44	46	43	29	13
		+ 1000	9	19	35	43	44	42	29	13

Pressure Drop (PD)

Pressure drops are reported in accordance with ASTM E477 methods and are based upon **ideal** flow conditions (5 diameters of straight duct on silencer inlet and 10 on outlet). Less than ideal conditions will result in an increase in pressure drop due to System Effects. See Silencer System Effects Data.

☐ Acceptable (0 - 0.35")

▒ Caution (>0.35") Pressure Drop may be too high for certain applications

DC Size (in.)	SO Dia. (in.)	SL (in.)	Weight (lbs)	Face Velocity (ft. per min) / Pressure Drop (in.w.g.)						
				500	1000	1500	2000	2500	3000	3500
12	20	24	87	0.02	0.09	0.20	0.36	0.57	0.82	1.11
		36	114	0.04	0.15	0.33	0.59	0.92	1.33	1.81
24	32	48	279	0.02	0.08	0.19	0.33	0.52	0.74	1.01
		72	379	0.03	0.13	0.29	0.51	0.80	1.15	1.56
36	44	72	589	0.02	0.09	0.20	0.36	0.57	0.82	1.11
		108	798	0.03	0.12	0.27	0.48	0.74	1.07	1.46
48	56	96	1026	0.02	0.08	0.19	0.33	0.52	0.74	1.01
		144	1416	0.03	0.10	0.23	0.42	0.65	0.94	1.28
60	68	120	1589	0.02	0.08	0.19	0.33	0.52	0.74	1.01
		180	2232	0.03	0.10	0.23	0.40	0.63	0.90	1.23

Generated Noise (GN)

@ 3 sq.ft. face area

Length (in.)	Face Velocity (ft. per min)	Octave Band - Hz/Generated Noise (dB re 10^{-12} watts)							
		63	125	250	500	1000	2000	4000	8000
All	- 1500	62	54	50	48	46	47	44	46
	- 1000	57	49	45	43	41	42	39	41
	+ 1000	56	48	45	42	38	39	37	39
	+ 1500	61	53	50	47	43	44	42	44

GN correction chart at right must be used to correct GN to other face areas. →

Face Area (sq.ft.)	1.5	3	6	12	24	48
dB	-3	0	+3	+6	+9	+12

CERTIFIED PERFORMANCE DATA

VIBRO-ACOUSTICS®
A Swegon Group company

CFL-MV-F1

Circular Film Lined
Medium velocity silencer
(<3000 fpm)

How to Specify Example:

24 X **CFL-MV-F1** X **72**

- **24** — Duct Connection Size
- **CFL-MV-F1** — Silencer Model
- **72** — Silencer Length

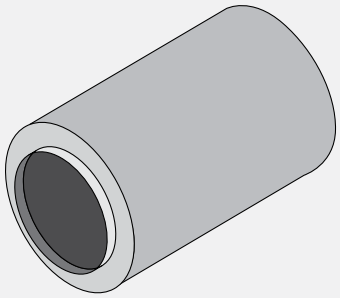

Insertion Loss (IL)

+ : "forward flow" where noise & airflow move in same direction (e.g. supply side)

- : "reverse flow" where noise & airflow move in opposite directions (e.g. return side)

DC Size - Duct Connection Size (in.)

SL - Silencer Length (in.)

FV - Face Velocity (ft. per min)

SO Dia. - Silencer Outer Diameter (in.)

See Silencer Selection Instructions. DIL above 50dB may be limited due to noise flanking around the silencer or along the duct walls. If more than 50dB DIL is required, contact your local Vibro-Acoustics representative or call **1-800-565-8401**.

DC Size (in.)	SL (in.)	FV (ft. per min)	Octave Band - Hz/Dynamic Insertion Loss (dB)							
			63	125	250	500	1000	2000	4000	8000
12	24	- 2000	4	7	10	16	24	33	34	12
		0	4	7	10	15	23	33	35	13
		+ 2000	4	7	10	14	21	33	36	15
24	48	- 2000	4	8	14	19	29	34	25	9
		0	4	8	14	19	27	34	26	10
		+ 2000	4	8	14	18	26	34	27	11
36	72	- 2000	7	12	17	23	29	26	18	6
		0	7	12	17	22	27	26	19	7
		+ 2000	7	12	17	22	26	26	20	9
48	96	- 2000	9	14	20	25	27	22	15	6
		0	9	14	20	24	26	22	16	7
		+ 2000	9	14	20	24	24	22	17	9
60	120	- 2000	9	14	22	26	24	19	14	5
		0	9	14	22	25	23	19	15	7
		+ 2000	9	14	22	24	21	19	16	8

DC Size (in.)	SL (in.)	FV (ft. per min)	Octave Band - Hz/Dynamic Insertion Loss (dB)							
			63	125	250	500	1000	2000	4000	8000
12	36	- 2000	6	9	15	23	36	49	52	18
		0	6	9	15	22	34	49	53	20
		+ 2000	6	9	15	22	33	49	54	21
24	72	- 2000	7	12	21	30	43	52	36	13
		0	7	12	21	30	41	52	37	14
		+ 2000	7	12	21	29	40	52	38	15
36	108	- 2000	10	17	26	35	42	39	28	10
		0	10	17	26	34	41	39	29	11
		+ 2000	10	17	26	33	39	39	31	13
48	144	- 2000	11	21	31	37	40	33	23	9
		0	11	21	31	37	38	33	24	11
		+ 2000	11	21	31	36	37	33	25	12
60	180	- 2000	13	22	33	38	36	28	20	9
		0	13	22	33	37	34	28	21	10
		+ 2000	13	22	33	37	33	28	23	11

Pressure Drop (PD)

Pressure drops are reported in accordance with ASTM E477 methods and are based upon **ideal** flow conditions (5 diameters of straight duct on silencer inlet and 10 on outlet). Less than ideal conditions will result in an increase in pressure drop due to System Effects. See Silencer System Effects Data.

☐ Acceptable (0 - 0.35")

▒ Caution (>0.35") Pressure Drop may be too high for certain applications

DC Size (in.)	SO Dia. (in.)	SL (in.)	Weight (lbs)	Face Velocity (ft. per min) / Pressure Drop (in.w.g.)						
				1000	1500	2000	2500	3000	3500	4000
12	28	24	123	0.02	0.05	0.10	0.15	0.21	0.29	0.38
		36	160	0.04	0.09	0.16	0.24	0.35	0.48	0.63
24	40	48	353	0.02	0.05	0.10	0.15	0.21	0.29	0.38
		72	471	0.04	0.08	0.15	0.23	0.33	0.45	0.59
36	52	72	699	0.02	0.05	0.10	0.15	0.21	0.29	0.38
		108	956	0.03	0.07	0.13	0.20	0.29	0.40	0.52
48	64	96	1180	0.02	0.05	0.09	0.14	0.20	0.28	0.36
		144	1635	0.03	0.07	0.12	0.19	0.28	0.38	0.49
60	76	120	1796	0.02	0.05	0.09	0.14	0.19	0.26	0.35
		180	2457	0.03	0.07	0.12	0.18	0.26	0.36	0.47

Generated Noise (GN)

@ 3 sq.ft. face area

Length (in.)	Face Velocity (ft. per min)	Octave Band - Hz/Generated Noise (dB re 10^{-12} watts)							
		63	125	250	500	1000	2000	4000	8000
All	- 3000	66	58	56	62	57	57	55	56
	- 1500	52	44	44	48	44	42	36	35
	+ 1500	51	43	44	47	41	39	34	33
	+ 3000	65	57	56	61	54	54	53	54

GN correction chart at right must be used to correct GN to other face areas. →

Face Area (sq.ft.)	1.5	3	6	12	24	48
dB	-3	0	+3	+6	+9	+12

CFL-MV-F2

Circular Film Lined
Medium velocity silencer
(<3000 fpm)

How to Specify Example:

24 X **CFL-MV-F2** X **72**

- **24** — Duct Connection Size
- **CFL-MV-F2** — Silencer Model
- **72** — Silencer Length

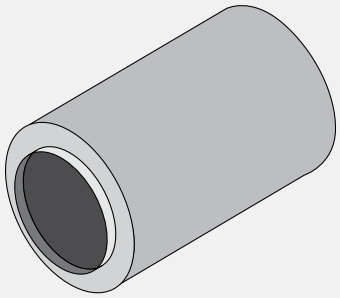

Insertion Loss (IL)

+ : "forward flow" where noise & airflow move in same direction (e.g. supply side)

- : "reverse flow" where noise & airflow move in opposite directions (e.g. return side)

DC Size - Duct Connection Size (in.)

SL - Silencer Length (in.)

FV - Face Velocity (ft. per min)

SO Dia. - Silencer Outer Diameter (in.)

See Silencer Selection Instructions. DIL above 50dB may be limited due to noise flanking around the silencer or along the duct walls. If more than 50dB DIL is required, contact your local Vibro-Acoustics representative or call **1-800-565-8401**.

DC Size (in.)	SL (in.)	FV (ft. per min)	Octave Band - Hz/Dynamic Insertion Loss (dB)							
			63	125	250	500	1000	2000	4000	8000
12	24	- 2000	3	4	8	16	24	33	34	12
		0	3	4	8	15	23	33	35	13
		+ 2000	3	4	8	14	21	33	36	15
24	48	- 2000	3	5	12	19	29	34	25	9
		0	3	5	12	19	27	34	26	10
		+ 2000	3	5	12	18	26	34	27	11
36	72	- 2000	4	8	15	23	29	26	18	6
		0	4	8	15	22	27	26	19	7
		+ 2000	4	8	15	22	26	26	20	9
48	96	- 2000	5	10	18	25	27	22	15	6
		0	5	10	18	24	26	22	16	7
		+ 2000	5	10	18	24	24	22	17	9
60	120	- 2000	5	10	19	26	24	19	14	5
		0	5	10	19	25	23	19	15	7
		+ 2000	5	10	19	24	21	19	16	8

DC Size (in.)	SL (in.)	FV (ft. per min)	Octave Band - Hz/Dynamic Insertion Loss (dB)							
			63	125	250	500	1000	2000	4000	8000
12	36	- 2000	3	6	13	23	36	49	52	18
		0	3	6	13	22	34	49	53	20
		+ 2000	3	6	13	22	33	49	54	21
24	72	- 2000	4	8	18	30	43	52	36	13
		0	4	8	18	30	41	52	37	14
		+ 2000	4	8	18	29	40	52	38	15
36	108	- 2000	6	11	22	35	42	39	28	10
		0	6	11	22	34	41	39	29	11
		+ 2000	6	11	22	33	39	39	31	13
48	144	- 2000	7	14	27	37	40	33	23	9
		0	7	14	27	37	38	33	24	11
		+ 2000	7	14	27	36	37	33	25	12
60	180	- 2000	8	15	28	38	36	28	20	9
		0	8	15	28	37	34	28	21	10
		+ 2000	8	15	28	37	33	28	23	11

Pressure Drop (PD)

Pressure drops are reported in accordance with ASTM E477 methods and are based upon **ideal** flow conditions (5 diameters of straight duct on silencer inlet and 10 on outlet). Less than ideal conditions will result in an increase in pressure drop due to System Effects. See Silencer System Effects Data.

☐ Acceptable (0 - 0.35")

▒ Caution (>0.35") Pressure Drop may be too high for certain applications

DC Size (in.)	SO Dia. (in.)	SL (in.)	Weight (lbs)	Face Velocity (ft. per min) / Pressure Drop (in.w.g.)						
				1000	1500	2000	2500	3000	3500	4000
12	20	24	85	0.02	0.05	0.10	0.15	0.21	0.29	0.38
		36	111	0.04	0.09	0.16	0.24	0.35	0.48	0.63
24	32	48	270	0.02	0.05	0.10	0.15	0.21	0.29	0.38
		72	362	0.04	0.08	0.15	0.23	0.33	0.45	0.59
36	44	72	564	0.02	0.05	0.10	0.15	0.21	0.29	0.38
		108	770	0.03	0.07	0.13	0.20	0.29	0.40	0.52
48	56	96	972	0.02	0.05	0.09	0.14	0.20	0.28	0.36
		144	1334	0.03	0.07	0.12	0.19	0.28	0.38	0.49
60	68	120	1513	0.02	0.05	0.09	0.14	0.19	0.26	0.35
		180	2081	0.03	0.07	0.12	0.18	0.26	0.36	0.47

Generated Noise (GN)

@ 3 sq.ft. face area

Length (in.)	Face Velocity (ft. per min)	Octave Band - Hz/Generated Noise (dB re 10^{-12} watts)							
		63	125	250	500	1000	2000	4000	8000
All	- 3000	66	58	56	62	57	57	55	56
	- 1500	52	44	44	48	44	42	36	35
	+ 1500	51	43	44	47	41	39	34	33
	+ 3000	65	57	56	61	54	54	53	54

GN correction chart at right must be used to correct GN to other face areas. →

Face Area (sq.ft.)	1.5	3	6	12	24	48
dB	-3	0	+3	+6	+9	+12

CERTIFIED PERFORMANCE DATA

VIBRO-ACOUSTICS®
A Swegon Group company

CFL-HV-F1

Circular Film Lined
High velocity silencer
(<5000 fpm)

How to Specify Example:

24 X **CFL-HV-F1** X **72**

- **24** — Duct Connection Size
- **CFL-HV-F1** — Silencer Model
- **72** — Silencer Length

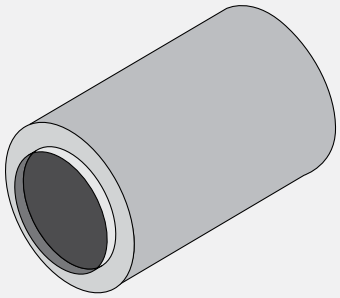

Insertion Loss (IL)

+ : "forward flow" where noise & airflow move in same direction (e.g. supply side)

- : "reverse flow" where noise & airflow move in opposite directions (e.g. return side)

DC Size - Duct Connection Size (in.)

SL - Silencer Length (in.)

FV - Face Velocity (ft. per min)

SO Dia. - Silencer Outer Diameter (in.)

See Silencer Selection Instructions. DIL above 50dB may be limited due to noise flanking around the silencer or along the duct walls. If more than 50dB DIL is required, contact your local Vibro-Acoustics representative or call **1-800-565-8401**.

DC Size (in.)	SL (in.)	FV (ft. per min)	Octave Band - Hz/Dynamic Insertion Loss (dB)							
			63	125	250	500	1000	2000	4000	8000
12	24	- 4000	4	7	10	14	20	27	25	9
		0	3	5	9	12	20	27	26	9
		+ 4000	1	4	8	11	19	27	27	9
24	48	- 4000	6	8	12	17	23	24	16	7
		0	4	7	12	16	23	24	17	7
		+ 4000	3	5	11	14	22	24	18	7
36	72	- 4000	7	10	15	20	22	19	14	6
		0	6	9	14	19	21	19	15	6
		+ 4000	4	8	13	17	20	19	16	6
48	96	- 4000	9	13	18	22	20	15	11	6
		0	7	12	17	21	19	15	12	6
		+ 4000	6	10	16	19	18	15	14	6
60	120	- 4000	9	13	19	22	17	14	11	6
		0	7	12	19	21	16	14	12	6
		+ 4000	6	10	18	19	16	14	14	6

DC Size (in.)	SL (in.)	FV (ft. per min)	Octave Band - Hz/Dynamic Insertion Loss (dB)							
			63	125	250	500	1000	2000	4000	8000
12	36	- 4000	6	9	14	20	30	41	37	13
		0	4	8	13	19	29	41	38	13
		+ 4000	3	7	12	17	28	41	40	13
24	72	- 4000	7	12	19	27	36	36	25	11
		0	6	10	19	25	35	36	26	11
		+ 4000	4	9	18	24	34	36	27	11
36	108	- 4000	10	16	22	30	32	28	20	9
		0	9	14	21	28	31	28	21	9
		+ 4000	7	13	20	27	30	28	23	9
48	144	- 4000	11	20	27	32	29	23	17	9
		0	10	18	26	31	28	23	18	9
		+ 4000	9	17	25	30	27	23	19	9
60	180	- 4000	11	20	28	32	25	21	17	9
		0	10	18	27	31	24	21	18	9
		+ 4000	9	17	27	30	23	21	19	9

Pressure Drop (PD)

Pressure drops are reported in accordance with ASTM E477 methods and are based upon **ideal** flow conditions (5 diameters of straight duct on silencer inlet and 10 on outlet). Less than ideal conditions will result in an increase in pressure drop due to System Effects. See Silencer System Effects Data.

☐ Acceptable (0 - 0.35")

▒ Caution (>0.35") Pressure Drop may be too high for certain applications

DC Size (in.)	SO Dia. (in.)	SL (in.)	Weight (lbs)	Face Velocity (ft. per min) / Pressure Drop (in.w.g.)						
				1000	2000	3000	4000	5000	6000	7000
12	28	24	120	0.01	0.03	0.08	0.14	0.22	0.31	0.43
		36	157	0.01	0.06	0.13	0.24	0.37	0.53	0.73
24	40	48	335	0.01	0.04	0.08	0.15	0.23	0.33	0.45
		72	450	0.02	0.07	0.15	0.27	0.42	0.60	0.82
36	52	72	655	0.01	0.04	0.08	0.15	0.23	0.33	0.45
		108	903	0.02	0.06	0.14	0.26	0.40	0.58	0.78
48	64	96	1090	0.01	0.04	0.08	0.15	0.23	0.33	0.45
		144	1501	0.02	0.06	0.14	0.25	0.39	0.55	0.75
60	76	120	1638	0.01	0.04	0.08	0.14	0.22	0.32	0.44
		180	2268	0.01	0.06	0.13	0.23	0.36	0.51	0.70

Generated Noise (GN)

@ 3 sq.ft. face area

Length (in.)	Face Velocity (ft. per min)	Octave Band - Hz/Generated Noise (dB re 10^{-12} watts)							
		63	125	250	500	1000	2000	4000	8000
All	- 5000	76	68	67	75	70	67	68	70
	- 3000	63	55	55	63	57	56	52	50
	+ 3000	62	54	55	62	54	53	50	48
	+ 5000	75	67	67	74	67	64	66	68

GN correction chart at right must be used to correct GN to other face areas. →

Face Area (sq.ft.)	1.5	3	6	12	24	48
dB	-3	0	+3	+6	+9	+12

CFL-HV-F2

Circular Film Lined
High velocity silencer
(<5000 fpm)

How to Specify Example:

24 X **CFL-HV-F2** X **72**

- **24** — Duct Connection Size
- **CFL-HV-F2** — Silencer Model
- **72** — Silencer Length

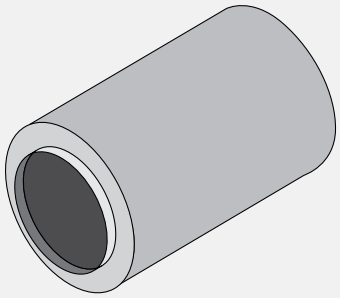

Insertion Loss (IL)

+ : "forward flow" where noise & airflow move in same direction (e.g. supply side)

- : "reverse flow" where noise & airflow move in opposite directions (e.g. return side)

DC Size - Duct Connection Size (in.)

SL - Silencer Length (in.)

FV - Face Velocity (ft. per min)

SO Dia. - Silencer Outer Diameter (in.)

See Silencer Selection Instructions. DIL above 50dB may be limited due to noise flanking around the silencer or along the duct walls. If more than 50dB DIL is required, contact your local Vibro-Acoustics representative or call **1-800-565-8401**.

DC Size (in.)	SL (in.)	FV (ft. per min)	Octave Band - Hz/Dynamic Insertion Loss (dB)							
			63	125	250	500	1000	2000	4000	8000
12	24	- 4000	3	4	8	14	20	27	25	9
		0	2	3	8	12	20	27	26	9
		+ 4000	1	3	7	11	19	27	27	9
24	48	- 4000	3	5	11	17	23	24	16	7
		0	3	4	10	16	23	24	17	7
		+ 4000	2	3	9	14	22	24	18	7
36	72	- 4000	4	7	13	20	22	19	14	6
		0	3	6	12	19	21	19	15	6
		+ 4000	3	5	12	17	20	19	16	6
48	96	- 4000	5	9	15	22	20	15	11	6
		0	4	8	15	21	19	15	12	6
		+ 4000	3	7	14	19	18	15	14	6
60	120	- 4000	5	9	17	22	17	14	11	6
		0	4	8	16	21	16	14	12	6
		+ 4000	3	7	15	19	16	14	14	6

DC Size (in.)	SL (in.)	FV (ft. per min)	Octave Band - Hz/Dynamic Insertion Loss (dB)							
			63	125	250	500	1000	2000	4000	8000
12	36	- 4000	3	6	12	20	30	41	37	13
		0	3	5	12	19	29	41	38	13
		+ 4000	2	4	11	17	28	41	40	13
24	72	- 4000	4	8	17	27	36	36	25	11
		0	3	7	16	25	35	36	26	11
		+ 4000	3	6	15	24	34	36	27	11
36	108	- 4000	6	10	19	30	32	28	20	9
		0	5	10	18	28	31	28	21	9
		+ 4000	4	9	18	27	30	28	23	9
48	144	- 4000	7	13	23	32	29	23	17	9
		0	6	12	22	31	28	23	18	9
		+ 4000	5	11	22	30	27	23	19	9
60	180	- 4000	7	13	25	32	25	21	17	9
		0	6	12	24	31	24	21	18	9
		+ 4000	5	11	23	30	23	21	19	9

Pressure Drop (PD)

Pressure drops are reported in accordance with ASTM E477 methods and are based upon **ideal** flow conditions (5 diameters of straight duct on silencer inlet and 10 on outlet). Less than ideal conditions will result in an increase in pressure drop due to System Effects. See Silencer System Effects Data.

☐ Acceptable (0 - 0.35")

▒ Caution (>0.35") Pressure Drop may be too high for certain applications

DC Size (in.)	SO Dia. (in.)	SL (in.)	Weight (lbs)	Face Velocity (ft. per min) / Pressure Drop (in.w.g.)						
				1000	2000	3000	4000	5000	6000	7000
12	20	24	82	0.01	0.03	0.08	0.14	0.22	0.31	0.43
		36	107	0.01	0.06	0.13	0.24	0.37	0.53	0.73
24	32	48	252	0.01	0.04	0.08	0.15	0.23	0.33	0.45
		72	341	0.02	0.07	0.15	0.27	0.42	0.60	0.82
36	44	72	520	0.01	0.04	0.08	0.15	0.23	0.33	0.45
		108	713	0.02	0.06	0.14	0.26	0.40	0.58	0.78
48	56	96	848	0.01	0.04	0.08	0.15	0.23	0.33	0.45
		144	1232	0.02	0.06	0.14	0.25	0.39	0.55	0.75
60	68	120	1362	0.01	0.04	0.08	0.14	0.22	0.32	0.44
		180	1892	0.01	0.06	0.13	0.23	0.36	0.51	0.70

Generated Noise (GN)

@ 3 sq.ft. face area

Length (in.)	Face Velocity (ft. per min)	Octave Band - Hz/Generated Noise (dB re 10^{-12} watts)							
		63	125	250	500	1000	2000	4000	8000
All	- 5000	76	68	67	75	70	67	68	70
	- 3000	63	55	55	63	57	56	52	50
	+ 3000	62	54	55	62	54	53	50	48
	+ 5000	75	67	67	74	67	64	66	68

GN correction chart at right must be used to correct GN to other face areas. →

Face Area (sq.ft.)	1.5	3	6	12	24	48
dB	-3	0	+3	+6	+9	+12

CERTIFIED PERFORMANCE DATA

VIBRO-ACOUSTICS®
A Swegon Group company

CFL-UHV-F1

Circular Film Lined
Ultra high velocity silencer
(<7000 fpm)

How to Specify Example:

24 X **CFL-UHV-F1** X **72**

- **24**: Duct Connection Size
- **CFL-UHV-F1**: Silencer Model
- **72**: Silencer Length

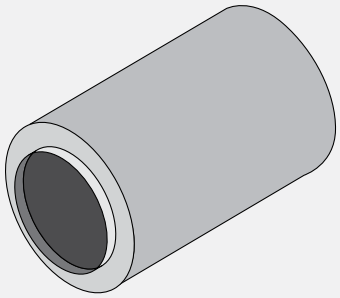

Insertion Loss (IL)

+ : "forward flow" where noise & airflow move in same direction (e.g. supply side)

- : "reverse flow" where noise & airflow move in opposite directions (e.g. return side)

DC Size - Duct Connection Size (in.)

SL - Silencer Length (in.)

FV - Face Velocity (ft. per min)

SO Dia. - Silencer Outer Diameter (in.)

See Silencer Selection Instructions. DIL above 50dB may be limited due to noise flanking around the silencer or along the duct walls. If more than 50dB DIL is required, contact your local Vibro-Acoustics representative or call **1-800-565-8401**.

DC Size (in.)	SL (in.)	FV (ft. per min)	Octave Band - Hz/Dynamic Insertion Loss (dB)							
			63	125	250	500	1000	2000	4000	8000
12	24	- 6000	3	4	9	11	10	11	8	3
		0	1	3	7	9	12	13	9	5
		+ 6000	0	1	5	8	13	15	10	6
24	48	- 6000	6	9	12	14	10	6	7	2
		0	4	8	11	13	12	8	8	3
		+ 6000	3	7	9	12	13	10	9	5
36	72	- 6000	7	10	14	14	7	5	6	1
		0	6	9	12	12	9	7	7	3
		+ 6000	4	8	11	11	10	9	8	4
48	96	- 6000	9	13	16	13	4	4	5	1
		0	7	12	14	12	5	6	6	2
		+ 6000	6	10	12	10	7	8	7	3
60	120	- 6000	9	13	17	10	3	4	5	1
		0	7	12	15	9	5	6	6	2
		+ 6000	6	10	13	7	6	8	7	3

DC Size (in.)	SL (in.)	FV (ft. per min)	Octave Band - Hz/Dynamic Insertion Loss (dB)							
			63	125	250	500	1000	2000	4000	8000
12	36	- 6000	4	5	12	16	16	17	14	6
		0	3	4	11	14	17	19	15	7
		+ 6000	1	3	9	13	19	21	16	9
24	72	- 6000	7	12	17	21	16	9	10	4
		0	6	10	15	19	17	11	11	5
		+ 6000	4	9	13	18	19	13	12	7
36	108	- 6000	10	16	21	19	11	8	9	3
		0	9	14	19	18	12	10	10	5
		+ 6000	7	13	18	17	14	12	11	6
48	144	- 6000	10	17	23	19	7	7	7	3
		0	9	16	21	17	9	9	8	4
		+ 6000	7	14	19	16	10	11	9	5
60	180	- 6000	11	20	24	14	6	7	7	1
		0	10	18	22	13	8	9	8	3
		+ 6000	9	17	20	12	9	11	9	4

Pressure Drop (PD)

Pressure drops are reported in accordance with ASTM E477 methods and are based upon **ideal** flow conditions (5 diameters of straight duct on silencer inlet and 10 on outlet). Less than ideal conditions will result in an increase in pressure drop due to System Effects. See Silencer System Effects Data.

☐ Acceptable (0 - 0.35")

☐ Caution (>0.35") Pressure Drop may be too high for certain applications

DC Size (in.)	SO Dia. (in.)	SL (in.)	Weight (lbs)	Face Velocity (ft. per min) / Pressure Drop (in.w.g.)						
				2000	3000	4000	5000	6000	7000	8000
12	28	24	114	0.01	0.03	0.04	0.07	0.10	0.14	0.18
		36	149	0.02	0.04	0.07	0.11	0.15	0.21	0.27
24	40	48	307	0.01	0.02	0.04	0.06	0.08	0.11	0.15
		72	414	0.01	0.03	0.06	0.09	0.13	0.18	0.23
36	52	72	584	0.01	0.02	0.03	0.05	0.08	0.10	0.13
		108	810	0.01	0.03	0.05	0.08	0.12	0.16	0.20
48	64	96	965	0.01	0.02	0.03	0.05	0.07	0.10	0.13
		144	1340	0.01	0.03	0.05	0.08	0.11	0.15	0.19
60	76	120	1418	0.01	0.02	0.03	0.05	0.07	0.09	0.12
		180	1985	0.01	0.03	0.04	0.07	0.10	0.14	0.18

Generated Noise (GN)

@ 3 sq.ft. face area

Length (in.)	Face Velocity (ft. per min)	Octave Band - Hz/Generated Noise (dB re 10^{-12} watts)							
		63	125	250	500	1000	2000	4000	8000
All	- 7000	84	76	75	81	78	77	66	67
	- 5000	74	66	65	71	68	67	56	57
	+ 5000	73	65	65	70	65	64	54	55
	+ 7000	83	75	75	80	75	74	64	65

GN correction chart at right must be used to correct GN to other face areas. →

Face Area (sq.ft.)	1.5	3	6	12	24	48
dB	-3	0	+3	+6	+9	+12

CFL-UHV-F2

Circular Film Lined
Ultra high velocity silencer
(<7000 fpm)

How to Specify Example:

24 X **CFL-UHV-F2** X **72**

- **24** — Duct Connection Size
- **CFL-UHV-F2** — Silencer Model
- **72** — Silencer Length

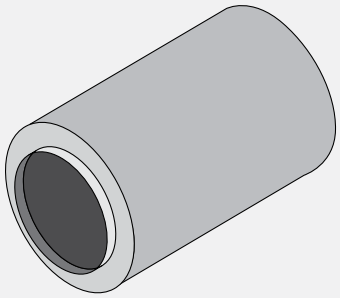

Insertion Loss (IL)

+ : "forward flow" where noise & airflow move in same direction (e.g. supply side)

- : "reverse flow" where noise & airflow move in opposite directions (e.g. return side)

DC Size - Duct Connection Size (in.)

SL - Silencer Length (in.)

FV - Face Velocity (ft. per min)

SO Dia. - Silencer Outer Diameter (in.)

See Silencer Selection Instructions. DIL above 50dB may be limited due to noise flanking around the silencer or along the duct walls. If more than 50dB DIL is required, contact your local Vibro-Acoustics representative or call **1-800-565-8401**.

DC Size (in.)	SL (in.)	FV (ft. per min)	Octave Band - Hz/Dynamic Insertion Loss (dB)							
			63	125	250	500	1000	2000	4000	8000
12	24	- 6000	2	3	8	11	10	11	8	3
		0	1	2	6	9	12	13	9	5
		+ 6000	0	1	5	8	13	15	10	6
24	48	- 6000	3	6	11	14	10	6	7	2
		0	3	5	9	13	12	8	8	3
		+ 6000	2	4	8	12	13	10	9	5
36	72	- 6000	4	7	12	14	7	5	6	1
		0	3	6	11	12	9	7	7	3
		+ 6000	3	5	9	11	10	9	8	4
48	96	- 6000	5	9	14	13	4	4	5	1
		0	4	8	12	12	5	6	6	2
		+ 6000	3	7	11	10	7	8	7	3
60	120	- 6000	5	9	15	10	3	4	5	1
		0	4	8	13	9	5	6	6	2
		+ 6000	3	7	12	7	6	8	7	3

DC Size (in.)	SL (in.)	FV (ft. per min)	Octave Band - Hz/Dynamic Insertion Loss (dB)							
			63	125	250	500	1000	2000	4000	8000
12	36	- 6000	3	3	11	16	16	17	14	6
		0	2	3	9	14	17	19	15	7
		+ 6000	1	2	8	13	19	21	16	9
24	72	- 6000	4	8	15	21	16	9	10	4
		0	3	7	13	19	17	11	11	5
		+ 6000	3	6	12	18	19	13	12	7
36	108	- 6000	6	10	18	19	11	8	9	3
		0	5	10	17	18	12	10	10	5
		+ 6000	4	9	15	17	14	12	11	6
48	144	- 6000	6	11	20	19	7	7	7	3
		0	5	10	18	17	9	9	8	4
		+ 6000	4	10	17	16	10	11	9	5
60	180	- 6000	7	13	21	14	6	7	7	1
		0	6	12	19	13	8	9	8	3
		+ 6000	5	11	18	12	9	11	9	4

Pressure Drop (PD)

Pressure drops are reported in accordance with ASTM E477 methods and are based upon **ideal** flow conditions (5 diameters of straight duct on silencer inlet and 10 on outlet). Less than ideal conditions will result in an increase in pressure drop due to System Effects. See Silencer System Effects Data.

☐ Acceptable (0 - 0.35")

☐ Caution (>0.35") Pressure Drop may be too high for certain applications

DC Size (in.)	SO Dia. (in.)	SL (in.)	Weight (lbs)	Face Velocity (ft. per min) / Pressure Drop (in.w.g.)						
				2000	3000	4000	5000	6000	7000	8000
12	20	24	76	0.01	0.03	0.04	0.07	0.10	0.14	0.18
		36	99	0.02	0.04	0.07	0.11	0.15	0.21	0.27
24	32	48	228	0.01	0.02	0.04	0.06	0.08	0.11	0.15
		72	305	0.01	0.03	0.06	0.09	0.13	0.18	0.23
36	44	72	456	0.01	0.02	0.03	0.05	0.08	0.10	0.13
		108	618	0.01	0.03	0.05	0.08	0.12	0.16	0.20
48	56	96	766	0.01	0.02	0.03	0.05	0.07	0.10	0.13
		144	1047	0.01	0.03	0.05	0.08	0.11	0.15	0.19
60	68	120	1135	0.01	0.02	0.03	0.05	0.07	0.09	0.12
		180	1589	0.01	0.03	0.04	0.07	0.10	0.14	0.18

Generated Noise (GN)

@ 3 sq.ft. face area

Length (in.)	Face Velocity (ft. per min)	Octave Band - Hz/Generated Noise (dB re 10^{-12} watts)							
		63	125	250	500	1000	2000	4000	8000
All	- 7000	84	76	75	81	78	77	66	67
	- 5000	74	66	65	71	68	67	56	57
	+ 5000	73	65	65	70	65	64	54	55
	+ 7000	83	75	75	80	75	74	64	65

GN correction chart at right must be used to correct GN to other face areas. →

Face Area (sq.ft.)	1.5	3	6	12	24	48
dB	-3	0	+3	+6	+9	+12

VIBRO-ACOUSTICS®
A Swegon Group company

RED REFL RENM

Rectangular Elbow silencers

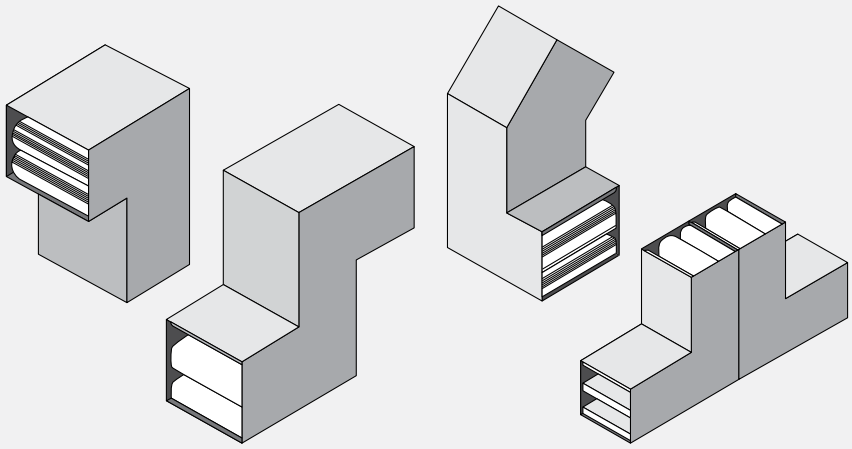

Description

VIBRO-ACOUSTICS' RED (Rectangular Elbow Dissipative), REFL (Rectangular Elbow Film Lined) and RENM (Rectangular Elbow No-Media) silencers incorporate a full 90 degree and/or a partial bend to fit the duct system configuration. RED silencers use acoustic grade glass fiber protected by perforated metal. REFL silencers incorporate a film liner between the perforated metal and the glass fiber. RENM silencers do not use glass fiber and are completely void of any fill material.

Splitters, sometimes called baffles, are aerodynamically designed to turn the air efficiently and minimize pressure drop. They vary in quantity and thickness, and air passages also vary in size.

Applications

> When there is not enough space for straight silencers (straight silencers should not be located within three diameters of duct elbows or bends)

> In supply, return or exhaust ductwork

> In fan plenums and air handling units (both supply and return)

> On the receiver side of valves, dampers, terminal boxes, etc.

> Economical substitution for acoustically lined duct

Features and Benefits

> Allows silencing when space does not permit the use of straight silencers
> Aerodynamic splitters and specially designed air passage ways efficiently turn the air for minimum pressure drop
> Multiple configurations available such as
> "T" shaped (two 90 degree Elbows back-to-back)
> "Y" shaped (two greater than 90 degree Elbows back-to-back)
> "T-Shirt" shaped (two less than 90 degree Elbows back-to-back)
> "Z" shaped (two Elbows of any angle in series)
> Available in any cross-sectional dimensions to "fit-the-duct"
> Modular unit sizes to fit ducts and air handling units without using transitions or large blank-off sections
> Can be selected to suit the acoustic, space, or energy-cost requirements
> Construction quality and aerodynamic design optimized to give reliable performance, more acoustics, lower pressure drop and lower overall cost
> Available in Dissipative (RED), Film Lined (REFL) and No-Media (RENM) options
> When break-out noise is of prime concern RED, REFL and RENM silencers may be appropriate selections. They may require mass/stiffness added to their outer casing (see HTL Silencers)

Cautions/When Not to Use RED, REFL and RENM Silencers

> When there is enough straight duct length to effectively use straight silencers

Performance Data/Testing

See RED, REFL, RENM Performance Data section. Vibro-Acoustics' 5th generation aero-acoustic laboratory was the first laboratory to be NVLAP accredited (Lab Code 100424-0) for the ASTM E-477 silencer test code. NVLAP is administered by the U.S. Dept. of Commerce.

Silencer Selection and Location

Elbow Silencers are not built up of standard modules like rectangular straight silencers. For elbow silencers, the outside to inside length ratio increases with the turning radius. Whereas for straight silencers the internal geometry is identical when silencer modules are combined. Therefore, Elbow Silencers need to be carefully selected to optimize performance. Call **1-800-565-8401** for custom selections by our Application Engineers.

Special Construction Options

> Heavier gauge casings and perforated metal
> Continuously welded casings
> Special materials (e.g. stainless steel, aluminum)
> Flanges
> Access doors
> Media protection: glass fiber cloth
> High transmission loss (HTL) casings to prevent break-out/break-in noise
> Built in transitions
> Removable splitters
> Flow measuring stations
> For details of above and more special options see Special Construction Options.

Standard Construction Features

RED

> Galvanized, lockformed casing constructed to SMACNA standards
> 2” slip connection at each end
> Aerodynamically shaped, galvanized nose at inlet
> Galvanized gap plates between splitters to ensure close dimensional tolerances at air passages
> Perforated galvanized splitters complete with perforated diffuser tail sections
> Splitters filled with acoustic grade glass fiber under minimum 15% compression

REFL

> Galvanized, lockformed casing constructed to SMACNA standards
> 2” slip connection at each end
> Aerodynamically shaped, galvanized nose at inlet
> Galvanized gap plates between splitters to ensure close dimensional tolerances at air passages
> Perforated galvanized splitters complete with perforated diffuser tail sections
> Splitters filled with acoustic grade glass fiber under minimum 15% compression
> Glass fiber carefully wrapped in Vibar™ film with lap joints away from splitter to reduce potential tearing of the Vibar™
> 0.5 inch deep corrugated honeycomb “stand-off” spacer sheet placed between the perforated metal and the film

RENM

> Galvanized, lockformed casing constructed to SMACNA standards
> 2” slip connection at each end
> Aerodynamically shaped, galvanized nose at inlet
> Special “tuned” perforated galvanized splitters complete with perforated diffuser tail sections
> Splitters configured with internal “tuned” chambers
> No acoustical media

VIBRO-ACOUSTICS®
A Swegon Group company

TD
TFL
TNM

Transitional Silencers

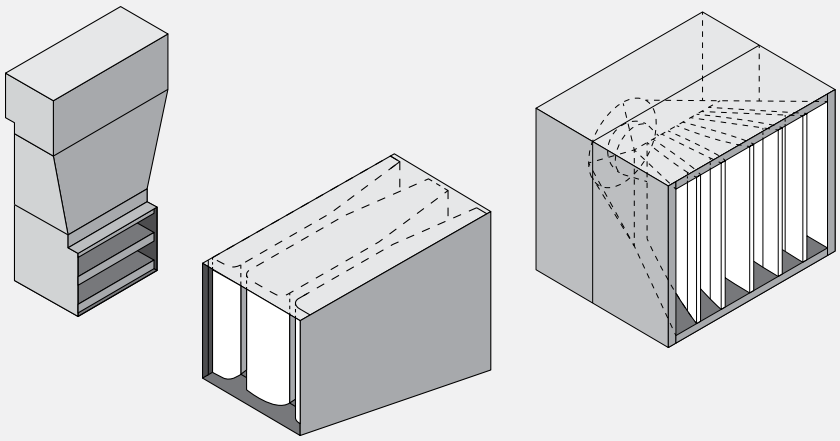

Description

VIBRO-ACOUSTICS' TD (Transitional Dissipative), TFL (Transitional Film Lined) and TNM (Transitional No-Media) silencers incorporate a transition(s) to optimally fit the duct system configuration. The transition(s) is integral to the silencer and may be in any plane. The silencers' splitters and air passages are custom designed to minimize pressure drop.

TD, TFL and TNM silencers can be straight or incorporate Elbows and HTL casings if necessary.

Applications

> Where system ductwork transitions exist at optimal or needed silencer locations

> Where controlled airflow expansions or contractions are desired

> Where varying airflow splits are required

> In supply, return or exhaust ductwork

> In fan plenums and air handling units (both supply and return)

> On the receiver side of valves, dampers, terminal boxes, etc.

Features and Benefits

> Allows silencing when the duct system shape does not permit the use of standard silencers

> Controlled aerodynamic acceleration or deceleration of the airflow through special splitter and air passage design

> Custom configurations available such as

  > Transitioning straight silencer

  > Round or oval to rectangular (or vice-versa) transitioning silencer

  > Transitioning Elbow Silencer

> Available in any cross-sectional dimensions to "fit-the-duct"

> One-piece or sectional supply for ease of installation

> Can be selected to suit the acoustic, space, or energy-cost requirements

> Construction quality and aerodynamic design optimized to give reliable performance, best acoustics, lowest pressure drop and lowest overall cost

> Available in Dissipative (TD), Film Lined (TFL) and NoMedia (TNM) options

> When break-out noise is of prime concern TD, TFL and TNM silencers may be appropriate selections. They may require mass/stiffness added to their outer casing. Refer to Silencer Selection Instructions for proper silencer location.

Cautions/When Not to Use TD, TFL AND TNM Silencers

> When there is enough space to properly fit standard silencers

Performance Data/Testing

See TD, TFL, and TNM Performance Data section. Vibro-Acoustics' 5th generation aero-acoustic laboratory was the first laboratory to be NVLAP accredited (Lab Code 100424-0) for the ASTM E-477 silencer test code. NVLAP is administered by the U.S. Dept. of Commerce.

Silencer Selection and Location

Vibro-Acoustics' Transitional Silencers need to be carefully selected to optimize performance. Call **1-800-565-8401** for custom selections by our application engineers.

Special Construction Options

> Heavier gauge casings and perforated metal

> Continuously welded casings

> Special materials (e.g. stainless steel, aluminum)

> Flanges

> Access doors

> Media protection: glass fiber cloth

> High transmission loss (htl) casings to prevent

> Break-out/break-in noise

> Removable splitters

> Flow measuring stations

> For details of above and more special options see Special Construction Options.

Standard Construction Features

TD

> Galvanized, lockformed casing constructed to SMACNA standards
> 2” slip connection at each end
> Aerodynamically shaped, galvanized nose at inlet
> Perforated galvanized splitters complete with perforated diffuser tail sections
> Splitters filled with acoustic grade glass fiber under minimum 15% compression

TFL

> Galvanized, lockformed casing constructed to SMACNA standards
> 2” slip connection at each end
> Aerodynamically shaped, galvanized nose at inlet
> Perforated galvanized splitters complete with perforated diffuser tail sections
> Splitters filled with acoustic grade glass fiber under minimum 15% compression
> Glass fiber carefully wrapped in Tedlar film with lap joints away from splitter to reduce potential tearing of the Tedlar
> 0.5 inch deep corrugated honeycomb “stand-off” spacer sheet placed between the perforated metal and the film

TNM

> Galvanized, lockformed casing constructed to SMACNA standards
> 2” slip connection at each end
> Aerodynamically shaped, galvanized nose at inlet
> Special “tuned” perforated galvanized splitters complete with perforated diffuser tail sections
> Splitters configured with internal “tuned” chambers
> No acoustical media

HVAC SILENCERS MOLDBLOCK

CERTIFIED PERFORMANCE DATA

VIBRO-ACOUSTICS®
A Swegon Group company

RMB-ULV-F1

Rectangular MoldBlock
Ultra low velocity silencer
(<500 fpm)

How to Specify Example:

32 X **21** **RMB-ULV-F1** X **60**

Duct Width	Duct Height	Silencer Model	Silencer Length

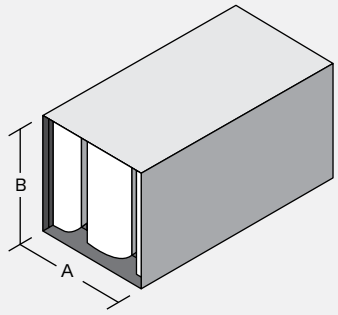

Insertion Loss (IL)

+ : "forward flow" where noise & airflow move in same direction (e.g. supply side)

- : "reverse flow" where noise & airflow move in opposite directions (e.g. return side)

See Silencer Selection Instructions. DIL above 50dB may be limited due to noise flanking around the silencer or along the duct walls. If more than 50dB DIL is required, contact your local Vibro-Acoustics Representative or call **1-800-565-8401**.

Length (in.)	Face Velocity (ft. per min)	Octave Band - Hz/Dynamic Insertion Loss (dB)							
		63	125	250	500	1000	2000	4000	8000
36	- 500	7	16	20	19	26	20	17	14
	+ 500	7	14	19	18	25	23	18	16
60	- 500	10	19	29	30	38	29	21	17
	+ 500	9	18	28	28	38	30	24	20
84	- 500	13	22	39	41	51	38	26	19
	+ 500	11	21	37	38	50	38	30	24
108	- 500	16	25	48	52	55	47	30	21
	+ 500	13	24	46	48	55	46	36	28

Pressure Drop (PD)

Pressure drops are reported in accordance with ASTM E477 methods and are based upon **ideal** flow conditions (5 diameters of straight duct on silencer inlet and 10 on outlet). Less than ideal conditions will result in an increase in pressure drop due to System Effects. See Silencer System Effects Data.

Length (in.)	Face Velocity (ft. per min) / Pressure Drop (in.w.g.)						
	250	500	750	1000	1250	1500	1750
36	0.03	0.12	0.26	0.46	0.72	1.04	1.41
60	0.04	0.16	0.35	0.63	0.98	1.41	1.91
84	0.05	0.20	0.45	0.80	1.24	1.79	2.43
108	0.06	0.24	0.54	0.96	1.50	2.17	2.95

☐ Acceptable (0 - 0.35") ☐ Caution (>0.35") Pressure Drop may be too high for certain applications

Generated Noise (GN)

@ 5 sq.ft. face area

Length (in.)	Face Velocity (ft. per min)	Octave Band - Hz/Generated Noise (dB re 10^{-12} watts)							
		63	125	250	500	1K	2K	4K	8K
All	- 750	55	42	38	41	47	49	40	32
	- 500	52	41	34	38	41	39	28	30
	+ 500	55	39	31	29	33	31	25	30
	+ 750	54	45	38	35	39	41	35	30

GN correction chart at right must be used to correct GN to other face areas. →

Face Area (sq.ft.)	2.5	5	10	20	40	80
dB	-3	0	+3	+6	+9	+12

Cross Section Sizes*

"A" dimension (in.)
14.5-15.5
29-31
58-62
116-124
145-155
174-186
203-217
232-248

"B" dimension
ANY SIZE

See Rectangular Silencer Cross-Section Dimensions to ensure selection matches ductwork dimensions.

CERTIFIED PERFORMANCE DATA

VIBRO-ACOUSTICS®
A Swegon Group company

RMB-ULV-F2

Rectangular MoldBlock
Ultra low velocity silencer
(<500 fpm)

How to Specify Example:

27 X **22** **RMB-ULV-F2** X **60**

Duct Width	Duct Height	Silencer Model	Silencer Length

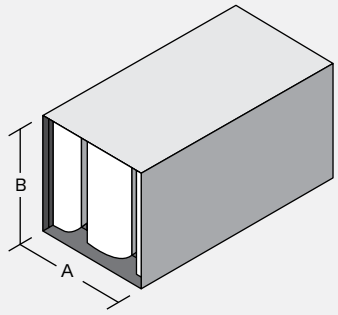

Insertion Loss (IL)

+ : "forward flow" where noise & airflow move in same direction (e.g. supply side)

- : "reverse flow" where noise & airflow move in opposite directions (e.g. return side)

See Silencer Selection Instructions. DIL above 50dB may be limited due to noise flanking around the silencer or along the duct walls. If more than 50dB DIL is required, contact your local Vibro-Acoustics Representative or call **1-800-565-8401**.

Length (in.)	Face Velocity (ft. per min)	Octave Band - Hz/Dynamic Insertion Loss (dB)							
		63	125	250	500	1000	2000	4000	8000
36	- 500	7	14	20	20	27	21	16	13
	+ 500	7	13	19	19	26	23	18	15
60	- 500	10	18	29	33	42	31	21	16
	+ 500	9	16	27	31	41	33	24	19
84	- 500	13	22	38	43	53	41	26	18
	+ 500	12	21	36	41	53	43	31	23
108	- 500	16	25	47	50	55	50	31	20
	+ 500	13	24	44	48	55	51	37	27

Pressure Drop (PD)

Pressure drops are reported in accordance with ASTM E477 methods and are based upon **ideal** flow conditions (5 diameters of straight duct on silencer inlet and 10 on outlet). Less than ideal conditions will result in an increase in pressure drop due to System Effects. See Silencer System Effects Data.

Length (in.)	Face Velocity (ft. per min) / Pressure Drop (in.w.g.)						
	250	500	750	1000	1250	1500	1750
36	0.03	0.11	0.26	0.45	0.71	1.02	1.39
60	0.04	0.15	0.34	0.61	0.95	1.37	1.86
84	0.05	0.19	0.44	0.78	1.22	1.75	2.39
108	0.06	0.22	0.50	0.89	1.40	2.01	2.74

☐ Acceptable (0 - 0.35") ☐ Caution (>0.35") Pressure Drop may be too high for certain applications

Generated Noise (GN)

@ 5 sq.ft. face area

Length (in.)	Face Velocity (ft. per min)	Octave Band - Hz/Generated Noise (dB re 10^{-12} watts)							
		63	125	250	500	1K	2K	4K	8K
All	- 750	54	43	40	42	47	50	40	31
	- 500	52	41	36	39	43	40	29	29
	+ 500	54	39	32	30	33	32	25	29
	+ 750	54	46	39	36	40	41	35	30

GN correction chart at right must be used to correct GN to other face areas. →

Face Area (sq.ft.)	2.5	5	10	20	40	80
dB	-3	0	+3	+6	+9	+12

Cross Section Sizes*

"A" dimension (in.)
13.5-14.5
27-29
54-58
81-87
108-116
135-145
162-174
189-203
216-232

"B" dimension
ANY SIZE

See Rectangular Silencer Cross-Section Dimensions to ensure selection matches ductwork dimensions.

CERTIFIED PERFORMANCE DATA

VIBRO-ACOUSTICS®
A Swegon Group company

RMB-ULV-F3

Rectangular MoldBlock
Ultra low velocity silencer
(<500 fpm)

How to Specify Example:

25 X **21** **RMB-ULV-F3** X **60**

Duct Width	Duct Height	Silencer Model	Silencer Length

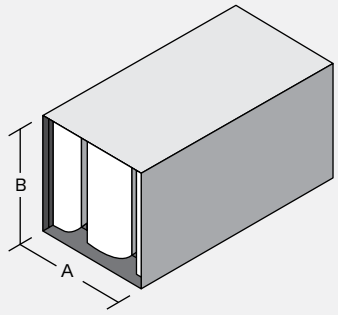

Insertion Loss (IL)

+ : "forward flow" where noise & airflow move in same direction (e.g. supply side)

- : "reverse flow" where noise & airflow move in opposite directions (e.g. return side)

See Silencer Selection Instructions. DIL above 50dB may be limited due to noise flanking around the silencer or along the duct walls. If more than 50dB DIL is required, contact your local Vibro-Acoustics Representative or call **1-800-565-8401**.

Length (in.)	Face Velocity (ft. per min)	Octave Band - Hz/Dynamic Insertion Loss (dB)							
		63	125	250	500	1000	2000	4000	8000
36	- 500	8	13	20	22	28	22	15	12
	+ 500	7	13	18	21	28	24	17	14
60	- 500	10	17	28	37	45	33	21	15
	+ 500	9	15	27	35	44	36	24	18
84	- 500	14	22	37	46	55	44	26	16
	+ 500	12	20	35	44	55	48	31	22
108	- 500	15	25	45	49	55	54	32	19
	+ 500	13	23	43	48	55	55	37	26

Pressure Drop (PD)

Pressure drops are reported in accordance with ASTM E477 methods and are based upon **ideal** flow conditions (5 diameters of straight duct on silencer inlet and 10 on outlet). Less than ideal conditions will result in an increase in pressure drop due to System Effects. See Silencer System Effects Data.

Length (in.)	Face Velocity (ft. per min) / Pressure Drop (in.w.g.)						
	250	500	750	1000	1250	1500	1750
36	0.03	0.11	0.25	0.45	0.70	1.00	1.37
60	0.04	0.15	0.33	0.59	0.92	1.33	1.80
84	0.05	0.19	0.43	0.76	1.20	1.72	2.34
108	0.05	0.21	0.47	0.83	1.29	1.86	2.53

☐ Acceptable (0 - 0.35") ☐ Caution (>0.35") Pressure Drop may be too high for certain applications

Generated Noise (GN)

@ 5 sq.ft. face area

Length (in.)	Face Velocity (ft. per min)	Octave Band - Hz/Generated Noise (dB re 10^{-12} watts)							
		63	125	250	500	1K	2K	4K	8K
All	- 750	53	45	42	44	48	50	40	31
	- 500	51	42	38	41	44	41	29	29
	+ 500	52	40	33	30	33	32	24	28
	+ 750	53	47	40	36	40	42	36	29

GN correction chart at right must be used to correct GN to other face areas. →

Face Area (sq.ft.)	2.5	5	10	20	40	80
dB	-3	0	+3	+6	+9	+12

Cross Section Sizes*

"A" dimension (in.)
13.5-14.5
27-29
54-58
81-87
108-116
135-145
162-174
189-203
216-232

"B" dimension
ANY SIZE

See Rectangular Silencer Cross-Section Dimensions to ensure selection matches ductwork dimensions.

CERTIFIED PERFORMANCE DATA

VIBRO-ACOUSTICS®
A Swegon Group company

RMB-ULV-F4

Rectangular MoldBlock
Ultra low velocity silencer
(<500 fpm)

How to Specify Example:

47 X **22** **RMB-ULV-F4** X **60**

Duct Width	Duct Height	Silencer Model	Silencer Length

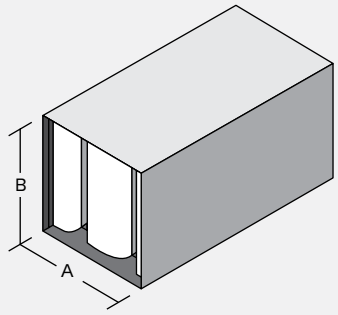

Insertion Loss (IL)

+ : "forward flow" where noise & airflow move in same direction (e.g. supply side)

- : "reverse flow" where noise & airflow move in opposite directions (e.g. return side)

See Silencer Selection Instructions. DIL above 50dB may be limited due to noise flanking around the silencer or along the duct walls. If more than 50dB DIL is required, contact your local Vibro-Acoustics Representative or call **1-800-565-8401**.

Length (in.)	Face Velocity (ft. per min)	Octave Band - Hz/Dynamic Insertion Loss (dB)							
		63	125	250	500	1000	2000	4000	8000
36	- 500	8	12	20	24	29	23	14	11
	+ 500	8	12	18	22	29	24	16	13
60	- 500	10	16	28	40	48	35	20	15
	+ 500	9	14	26	38	47	38	24	17
84	- 500	14	21	36	48	55	47	26	15
	+ 500	12	20	34	47	55	53	32	21
108	- 500	15	25	44	48	55	55	33	19
	+ 500	13	22	41	48	55	55	38	24

Pressure Drop (PD)

Pressure drops are reported in accordance with ASTM E477 methods and are based upon **ideal** flow conditions (5 diameters of straight duct on silencer inlet and 10 on outlet). Less than ideal conditions will result in an increase in pressure drop due to System Effects. See Silencer System Effects Data.

Length (in.)	Face Velocity (ft. per min) / Pressure Drop (in.w.g.)						
	250	500	750	1000	1250	1500	1750
36	0.03	0.11	0.25	0.44	0.69	0.99	1.35
60	0.04	0.14	0.32	0.57	0.89	1.28	1.75
84	0.05	0.19	0.42	0.75	1.17	1.69	2.30
108	0.05	0.19	0.43	0.76	1.19	1.71	2.33

☐ Acceptable (0 - 0.35") ☐ Caution (>0.35") Pressure Drop may be too high for certain applications

Generated Noise (GN)

@ 5 sq.ft. face area

Length (in.)	Face Velocity (ft. per min)	Octave Band - Hz/Generated Noise (dB re 10^{-12} watts)							
		63	125	250	500	1K	2K	4K	8K
All	- 750	52	46	44	46	49	51	41	30
	- 500	51	42	40	42	45	43	29	28
	+ 500	51	40	34	31	34	33	24	27
	+ 750	53	47	41	37	40	43	36	29

GN correction chart at right must be used to correct GN to other face areas. →

Face Area (sq.ft.)	2.5	5	10	20	40	80
dB	-3	0	+3	+6	+9	+12

Cross Section Sizes*

"A" dimension (in.)
11.5-12.5
23-25
46-50
69-100
115-125
138-150
161-175
207-225

"B" dimension
ANY SIZE

See Rectangular Silencer Cross-Section Dimensions to ensure selection matches ductwork dimensions.

CERTIFIED PERFORMANCE DATA

VIBRO-ACOUSTICS®
A Swegon Group company

RMB-ULV-F5

Rectangular MoldBlock
Ultra low velocity silencer
(<500 fpm)

How to Specify Example:

44 X **22** **RMB-ULV-F5** X **60**

Duct Width | Duct Height | Silencer Model | Silencer Length

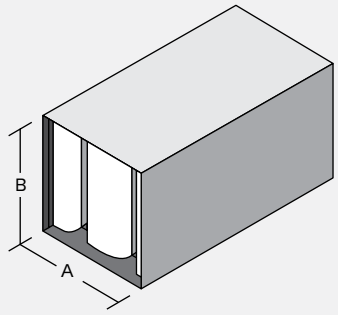

Insertion Loss (IL)

+ : "forward flow" where noise & airflow move in same direction (e.g. supply side)

- : "reverse flow" where noise & airflow move in opposite directions (e.g. return side)

See Silencer Selection Instructions. DIL above 50dB may be limited due to noise flanking around the silencer or along the duct walls. If more than 50dB DIL is required, contact your local Vibro-Acoustics Representative or call **1-800-565-8401**.

Length (in.)	Face Velocity (ft. per min)	Octave Band - Hz/Dynamic Insertion Loss (dB)							
		63	125	250	500	1000	2000	4000	8000
36	- 500	7	12	19	24	32	26	16	12
	+ 500	7	11	17	23	31	26	18	13
60	- 500	10	16	27	40	49	39	23	17
	+ 500	8	14	25	37	48	42	27	19
84	- 500	13	22	35	47	55	50	30	18
	+ 500	12	20	33	46	55	55	36	23
108	- 500	15	26	43	48	55	55	37	22
	+ 500	13	23	40	48	55	55	42	27

Pressure Drop (PD)

Pressure drops are reported in accordance with ASTM E477 methods and are based upon **ideal** flow conditions (5 diameters of straight duct on silencer inlet and 10 on outlet). Less than ideal conditions will result in an increase in pressure drop due to System Effects. See Silencer System Effects Data.

Length (in.)	Face Velocity (ft. per min) / Pressure Drop (in.w.g.)						
	250	500	750	1000	1250	1500	1750
36	0.03	0.12	0.26	0.47	0.73	1.06	1.44
60	0.04	0.15	0.34	0.60	0.94	1.36	1.85
84	0.05	0.19	0.44	0.78	1.22	1.75	2.38
108	0.05	0.20	0.46	0.82	1.27	1.83	2.50

☐ Acceptable (0 - 0.35") ☐ Caution (>0.35") Pressure Drop may be too high for certain applications

Generated Noise (GN)

@ 5 sq.ft. face area

Length (in.)	Face Velocity (ft. per min)	Octave Band - Hz/Generated Noise (dB re 10^{-12} watts)							
		63	125	250	500	1K	2K	4K	8K
All	- 750	52	46	44	46	49	51	41	31
	- 500	51	42	40	42	45	43	29	28
	+ 500	51	40	34	31	34	32	24	27
	+ 750	53	47	41	38	40	43	36	29

GN correction chart at right must be used to correct GN to other face areas. →

Face Area (sq.ft.)	2.5	5	10	20	40	80
dB	-3	0	+3	+6	+9	+12

Cross Section Sizes*

"A" dimension (in.)
10.5-11.5
21-23
42-46
63-69
105-115
126-138
147-161
168-184
189-207

"B" dimension
ANY SIZE

See Rectangular Silencer Cross-Section Dimensions to ensure selection matches ductwork dimensions.

CERTIFIED PERFORMANCE DATA

VIBRO-ACOUSTICS®
A Swegon Group company

RMB-ULV-F6

Rectangular MoldBlock
Ultra low velocity silencer
(<500 fpm)

How to Specify Example:

40 X **21** **RMB-ULV-F6** X **60**

Duct Width | Duct Height | Silencer Model | Silencer Length

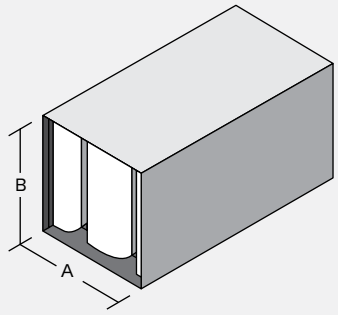

Insertion Loss (IL)

+ : "forward flow" where noise & airflow move in same direction (e.g. supply side)

- : "reverse flow" where noise & airflow move in opposite directions (e.g. return side)

See Silencer Selection Instructions. DIL above 50dB may be limited due to noise flanking around the silencer or along the duct walls. If more than 50dB DIL is required, contact your local Vibro-Acoustics Representative or call **1-800-565-8401**.

Length (in.)	Face Velocity (ft. per min)	Octave Band - Hz/Dynamic Insertion Loss (dB)							
		63	125	250	500	1000	2000	4000	8000
36	- 500	7	12	18	24	35	28	17	12
	+ 500	6	10	16	23	34	29	19	14
60	- 500	10	16	26	39	50	44	27	18
	+ 500	8	14	24	37	49	46	31	21
84	- 500	13	22	34	46	55	52	34	21
	+ 500	11	20	32	45	55	55	39	26
108	- 500	14	27	42	47	55	55	42	25
	+ 500	12	24	39	47	55	55	46	30

Pressure Drop (PD)

Pressure drops are reported in accordance with ASTM E477 methods and are based upon **ideal** flow conditions (5 diameters of straight duct on silencer inlet and 10 on outlet). Less than ideal conditions will result in an increase in pressure drop due to System Effects. See Silencer System Effects Data.

Length (in.)	Face Velocity (ft. per min) / Pressure Drop (in.w.g.)						
	250	500	750	1000	1250	1500	1750
36	0.03	0.13	0.28	0.50	0.78	1.13	1.53
60	0.04	0.16	0.36	0.64	0.99	1.43	1.95
84	0.05	0.20	0.45	0.81	1.26	1.82	2.47
108	0.05	0.22	0.49	0.87	1.36	1.96	2.66

☐ Acceptable (0 - 0.35") ☐ Caution (>0.35") Pressure Drop may be too high for certain applications

Generated Noise (GN)

@ 5 sq.ft. face area

Length (in.)	Face Velocity (ft. per min)	Octave Band - Hz/Generated Noise (dB re 10^{-12} watts)							
		63	125	250	500	1K	2K	4K	8K
All	- 750	52	46	44	46	50	52	42	31
	- 500	51	42	40	42	45	43	29	28
	+ 500	51	40	34	31	34	32	23	27
	+ 750	54	48	42	38	41	43	36	29

GN correction chart at right must be used to correct GN to other face areas. →

Face Area (sq.ft.)	2.5	5	10	20	40	80
dB	-3	0	+3	+6	+9	+12

Cross Section Sizes*

"A" dimension (in.)
9.5-10.5
19-21
38-42
57-63
76-84
95-105
114-126
133-147
152-168
171-189

"B" dimension
ANY SIZE

See Rectangular Silencer Cross-Section Dimensions to ensure selection matches ductwork dimensions.

CERTIFIED PERFORMANCE DATA

VIBRO-ACOUSTICS®
A Swegon Group company

RMB-ULV-F7

Rectangular MoldBlock
Ultra low velocity silencer
(<500 fpm)

How to Specify Example:

37 X **21** **RMB-ULV-F7** X **60**

Duct Width | Duct Height | Silencer Model | Silencer Length

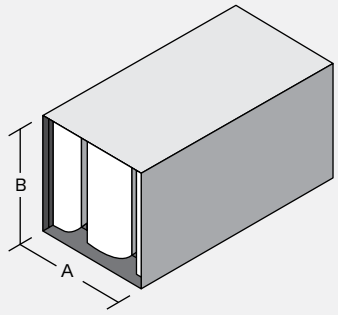

Insertion Loss (IL)

+ : "forward flow" where noise & airflow move in same direction (e.g. supply side)

- : "reverse flow" where noise & airflow move in opposite directions (e.g. return side)

See Silencer Selection Instructions. DIL above 50dB may be limited due to noise flanking around the silencer or along the duct walls. If more than 50dB DIL is required, contact your local Vibro-Acoustics Representative or call **1-800-565-8401**.

Length (in.)	Face Velocity (ft. per min)	Octave Band - Hz/Dynamic Insertion Loss (dB)							
		63	125	250	500	1000	2000	4000	8000
36	- 500	7	10	22	29	35	29	19	13
	+ 500	6	9	20	28	34	30	21	15
60	- 500	9	14	32	47	48	46	30	21
	+ 500	8	13	30	44	47	47	34	23
84	- 500	12	21	42	55	54	53	38	24
	+ 500	10	18	39	54	55	55	43	29
108	- 500	14	25	53	55	54	55	46	29
	+ 500	12	22	48	55	54	55	49	34

Pressure Drop (PD)

Pressure drops are reported in accordance with ASTM E477 methods and are based upon **ideal** flow conditions (5 diameters of straight duct on silencer inlet and 10 on outlet). Less than ideal conditions will result in an increase in pressure drop due to System Effects. See Silencer System Effects Data.

Length (in.)	Face Velocity (ft. per min) / Pressure Drop (in.w.g.)						
	250	500	750	1000	1250	1500	1750
36	0.03	0.13	0.30	0.53	0.83	1.19	1.62
60	0.04	0.17	0.38	0.67	1.05	1.51	2.05
84	0.05	0.21	0.47	0.83	1.30	1.88	2.56
108	0.06	0.23	0.52	0.93	1.45	2.08	2.83

☐ Acceptable (0 - 0.35") ☐ Caution (>0.35") Pressure Drop may be too high for certain applications

Generated Noise (GN)

@ 5 sq.ft. face area

Length (in.)	Face Velocity (ft. per min)	Octave Band - Hz/Generated Noise (dB re 10^{-12} watts)							
		63	125	250	500	1K	2K	4K	8K
All	- 750	52	46	45	46	50	53	43	32
	- 500	51	41	40	42	45	43	29	28
	+ 500	51	40	34	31	34	31	23	27
	+ 750	54	49	42	39	41	43	36	29

GN correction chart at right must be used to correct GN to other face areas. →

Face Area (sq.ft.)	2.5	5	10	20	40	80
dB	-3	0	+3	+6	+9	+12

Cross Section Sizes*

"A" dimension (in.)
8.25-9.5
16.5-19
33-38
49.7-57
66-76
82.5-95
99-114
115.5-133
132-152
148.5-171

"B" dimension
ANY SIZE

See Rectangular Silencer Cross-Section Dimensions to ensure selection matches ductwork dimensions.

CERTIFIED PERFORMANCE DATA

VIBRO-ACOUSTICS®
A Swegon Group company

RMB-ULV-F8

Rectangular MoldBlock
Ultra low velocity silencer
(<500 fpm)

How to Specify Example:

14 X **22** **RMB-ULV-F8** X **60**

Duct Width | Duct Height | Silencer Model | Silencer Length

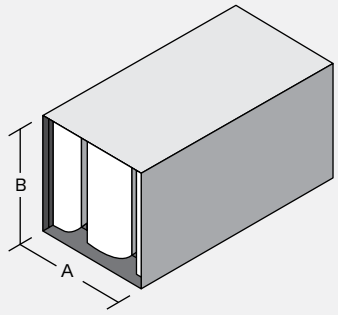

Insertion Loss (IL)

+ : "forward flow" where noise & airflow move in same direction (e.g. supply side)

- : "reverse flow" where noise & airflow move in opposite directions (e.g. return side)

See Silencer Selection Instructions. DIL above 50dB may be limited due to noise flanking around the silencer or along the duct walls. If more than 50dB DIL is required, contact your local Vibro-Acoustics Representative or call **1-800-565-8401**.

Length (in.)	Face Velocity (ft. per min)	Octave Band - Hz/Dynamic Insertion Loss (dB)							
		63	125	250	500	1000	2000	4000	8000
36	- 500	5	11	19	28	35	30	24	20
	+ 500	4	8	18	27	33	30	23	19
60	- 500	7	17	29	42	45	46	29	25
	+ 500	6	14	27	40	44	46	30	25
84	- 500	10	23	38	55	55	55	35	30
	+ 500	7	20	36	53	55	55	37	30
108	- 500	13	29	48	55	55	55	41	35
	+ 500	9	26	45	55	55	55	44	36

Pressure Drop (PD)

Pressure drops are reported in accordance with ASTM E477 methods and are based upon **ideal** flow conditions (5 diameters of straight duct on silencer inlet and 10 on outlet). Less than ideal conditions will result in an increase in pressure drop due to System Effects. See Silencer System Effects Data.

Length (in.)	Face Velocity (ft. per min) / Pressure Drop (in.w.g.)						
	250	500	750	1000	1250	1500	1750
36	0.04	0.16	0.35	0.63	0.98	1.42	1.93
60	0.05	0.19	0.42	0.75	1.18	1.70	2.31
84	0.05	0.22	0.49	0.88	1.37	1.98	2.69
108	0.06	0.25	0.57	1.00	1.57	2.26	3.08

☐ Acceptable (0 - 0.35") ☐ Caution (>0.35") Pressure Drop may be too high for certain applications

Generated Noise (GN)

@ 5 sq.ft. face area

Length (in.)	Face Velocity (ft. per min)	Octave Band - Hz/Generated Noise (dB re 10^{-12} watts)							
		63	125	250	500	1K	2K	4K	8K
All	- 750	55	43	43	46	49	52	42	33
	- 500	54	40	39	44	43	40	26	30
	+ 500	51	41	34	33	33	29	24	29
	+ 750	56	50	41	38	39	41	33	30

GN correction chart at right must be used to correct GN to other face areas. →

Face Area (sq.ft.)	2.5	5	10	20	40	80
dB	-3	0	+3	+6	+9	+12

Cross Section Sizes*

"A" dimension (in.)
6.75-8.25
13.5-16.5
27-33
40.5-49.5
54-66
67.5-82.5
81-99
94.5-115.5
108-132
121.5-148.5

"B" dimension
ANY SIZE

See Rectangular Silencer Cross-Section Dimensions to ensure selection matches ductwork dimensions.

RMB-ULV-F9

Rectangular MoldBlock
Ultra low velocity silencer
(<500 fpm)

How to Specify Example:

21 X **21** **RMB-ULV-F9** X **60**

Duct Width | Duct Height | Silencer Model | Silencer Length

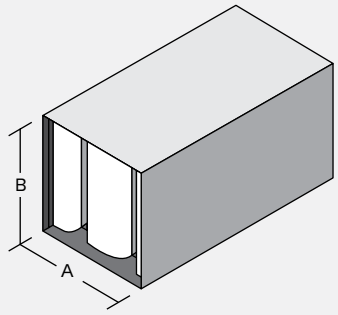

Insertion Loss (IL)

+ : "forward flow" where noise & airflow move in same direction (e.g. supply side)

- : "reverse flow" where noise & airflow move in opposite directions (e.g. return side)

See Silencer Selection Instructions. DIL above 50dB may be limited due to noise flanking around the silencer or along the duct walls. If more than 50dB DIL is required, contact your local Vibro-Acoustics Representative or call **1-800-565-8401**.

Length (in.)	Face Velocity (ft. per min)	Octave Band - Hz/Dynamic Insertion Loss (dB)							
		63	125	250	500	1000	2000	4000	8000
36	- 500	5	10	18	29	43	35	24	15
	+ 500	4	7	16	28	42	36	25	18
60	- 500	9	15	28	45	51	55	40	26
	+ 500	7	13	26	43	50	55	44	29
84	- 500	10	22	38	53	53	55	50	33
	+ 500	9	18	34	51	54	55	54	37
108	- 500	13	28	49	55	54	55	55	39
	+ 500	10	24	43	55	53	55	55	43

Pressure Drop (PD)

Pressure drops are reported in accordance with ASTM E477 methods and are based upon **ideal** flow conditions (5 diameters of straight duct on silencer inlet and 10 on outlet). Less than ideal conditions will result in an increase in pressure drop due to System Effects. See Silencer System Effects Data.

Length (in.)	Face Velocity (ft. per min) / Pressure Drop (in.w.g.)						
	250	500	750	1000	1250	1500	1750
36	0.04	0.16	0.35	0.62	0.97	1.40	1.90
60	0.05	0.19	0.43	0.77	1.20	1.73	2.36
84	0.05	0.23	0.52	0.92	1.44	2.07	2.82
108	0.07	0.27	0.61	1.09	1.70	2.45	3.34

☐ Acceptable (0 - 0.35") ☐ Caution (>0.35") Pressure Drop may be too high for certain applications

Generated Noise (GN)

@ 5 sq.ft. face area

Length (in.)	Face Velocity (ft. per min)	Octave Band - Hz/Generated Noise (dB re 10^{-12} watts)							
		63	125	250	500	1K	2K	4K	8K
All	- 750	53	47	45	47	51	55	45	34
	- 500	51	41	50	43	46	43	29	28
	+ 500	51	41	34	32	34	30	23	27
	+ 750	54	51	44	41	42	44	36	29

GN correction chart at right must be used to correct GN to other face areas. →

Face Area (sq.ft.)	2.5	5	10	20	40	80
dB	-3	0	+3	+6	+9	+12

Cross Section Sizes*

"A" dimension (in.)
5-6.75
10-13.5
20-27
30-40.5
40-54
50-67.5
60-81
70-94.5
80-108
90-121.5

"B" dimension
ANY SIZE

See Rectangular Silencer Cross-Section Dimensions to ensure selection matches ductwork dimensions.

CERTIFIED PERFORMANCE DATA

VIBRO-ACOUSTICS®
A Swegon Group company

RMB-LV-F1

Rectangular MoldBlock
Low velocity silencer
(<750 fpm)

How to Specify Example:

32 X **21** **RMB-LV-F1** X **60**

Duct Width	Duct Height	Silencer Model	Silencer Length

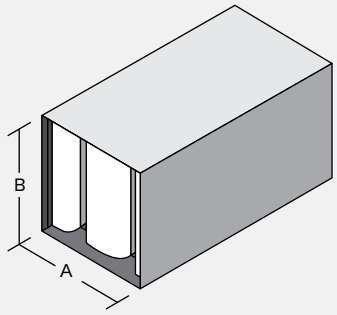

Insertion Loss (IL)

+ : "forward flow" where noise & airflow move in same direction (e.g. supply side)

- : "reverse flow" where noise & airflow move in opposite directions (e.g. return side)

See Silencer Selection Instructions. DIL above 50dB may be limited due to noise flanking around the silencer or along the duct walls. If more than 50dB DIL is required, contact your local Vibro-Acoustics Representative or call **1-800-565-8401**.

Length (in.)	Face Velocity (ft. per min)	Octave Band - Hz/Dynamic Insertion Loss (dB)							
		63	125	250	500	1000	2000	4000	8000
36	- 750	7	11	17	18	21	15	15	13
	+ 750	5	10	16	17	20	18	16	13
60	- 750	10	15	27	29	34	24	18	16
	+ 750	8	14	24	27	34	25	20	16
84	- 750	13	19	36	40	47	33	21	18
	+ 750	11	18	33	37	47	33	23	18
108	- 750	17	23	45	50	55	41	24	21
	+ 750	13	21	42	47	55	40	27	21

Pressure Drop (PD)

Pressure drops are reported in accordance with ASTM E477 methods and are based upon **ideal** flow conditions (5 diameters of straight duct on silencer inlet and 10 on outlet). Less than ideal conditions will result in an increase in pressure drop due to System Effects. See Silencer System Effects Data.

Length (in.)	Face Velocity (ft. per min) / Pressure Drop (in.w.g.)						
	250	500	750	1000	1250	1500	1750
36	0.02	0.07	0.15	0.27	0.42	0.61	0.83
60	0.02	0.09	0.20	0.36	0.56	0.80	1.09
84	0.03	0.11	0.25	0.44	0.70	1.00	1.36
108	0.03	0.13	0.30	0.53	0.83	1.20	1.63

☐ Acceptable (0 - 0.35") ☐ Caution (>0.35") Pressure Drop may be too high for certain applications

Generated Noise (GN)

@ 5 sq.ft. face area

Length (in.)	Face Velocity (ft. per min)	Octave Band - Hz/Generated Noise (dB re 10^{-12} watts)							
		63	125	250	500	1K	2K	4K	8K
All	- 750	52	44	40	44	48	46	34	27
	- 500	52	41	38	40	39	32	22	26
	+ 500	54	38	31	29	31	27	21	26
	+ 750	52	43	36	34	38	38	28	26

GN correction chart at right must be used to correct GN to other face areas. →

Face Area (sq.ft.)	2.5	5	10	20	40	80
dB	-3	0	+3	+6	+9	+12

Cross Section Sizes*

"A" dimension (in.)
14.5-15.5
29-31
58-62
87-93
116-124
145-155
174-186
203-217
232-248

"B" dimension
ANY SIZE

See Rectangular Silencer Cross-Section Dimensions to ensure selection matches ductwork dimensions.

CERTIFIED PERFORMANCE DATA

VIBRO-ACOUSTICS®
A Swegon Group company

RMB-LV-F2

Rectangular MoldBlock
Low velocity silencer
(<750 fpm)

How to Specify Example:

27 X **22** **RMB-LV-F2** X **60**

Duct Width | Duct Height | Silencer Model | Silencer Length

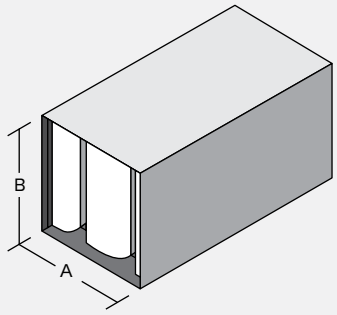

Insertion Loss (IL)

+ : "forward flow" where noise & airflow move in same direction (e.g. supply side)

- : "reverse flow" where noise & airflow move in opposite directions (e.g. return side)

See Silencer Selection Instructions. DIL above 50dB may be limited due to noise flanking around the silencer or along the duct walls. If more than 50dB DIL is required, contact your local Vibro-Acoustics Representative or call **1-800-565-8401**.

Length (in.)	Face Velocity (ft. per min)	Octave Band - Hz/Dynamic Insertion Loss (dB)							
		63	125	250	500	1000	2000	4000	8000
36	- 750	7	10	17	20	22	17	14	12
	+ 750	5	9	16	18	22	19	15	12
60	- 750	10	15	26	32	36	26	18	15
	+ 750	8	13	24	30	36	28	20	15
84	- 750	13	19	35	42	50	36	21	17
	+ 750	11	17	32	40	50	38	24	18
108	- 750	16	23	44	49	55	43	25	19
	+ 750	13	21	41	47	55	44	28	20

Pressure Drop (PD)

Pressure drops are reported in accordance with ASTM E477 methods and are based upon **ideal** flow conditions (5 diameters of straight duct on silencer inlet and 10 on outlet). Less than ideal conditions will result in an increase in pressure drop due to System Effects. See Silencer System Effects Data.

Length (in.)	Face Velocity (ft. per min) / Pressure Drop (in.w.g.)						
	250	500	750	1000	1250	1500	1750
36	0.02	0.07	0.15	0.26	0.41	0.59	0.81
60	0.02	0.09	0.20	0.35	0.55	0.79	1.08
84	0.03	0.11	0.24	0.43	0.67	0.97	1.32
108	0.03	0.12	0.28	0.50	0.77	1.11	1.52

☐ Acceptable (0 - 0.35") ☐ Caution (>0.35") Pressure Drop may be too high for certain applications

Generated Noise (GN)

@ 5 sq.ft. face area

Length (in.)	Face Velocity (ft. per min)	Octave Band - Hz/Generated Noise (dB re 10^{-12} watts)							
		63	125	250	500	1K	2K	4K	8K
All	- 750	51	45	42	46	48	47	34	27
	- 500	51	42	41	41	40	33	22	25
	+ 500	53	38	32	30	31	28	21	25
	+ 750	52	43	37	35	38	39	29	25

GN correction chart at right must be used to correct GN to other face areas. →

Face Area (sq.ft.)	2.5	5	10	20	40	80
dB	-3	0	+3	+6	+9	+12

Cross Section Sizes*

"A" dimension (in.)
13.5-14.5
27-29
54-58
81-8
108-116
135-145
162-174
189-203
216-232

"B" dimension
ANY SIZE

See Rectangular Silencer Cross-Section Dimensions to ensure selection matches ductwork dimensions.

CERTIFIED PERFORMANCE DATA

VIBRO-ACOUSTICS®
A Swegon Group company

RMB-LV-F3

Rectangular MoldBlock
Low velocity silencer
(<750 fpm)

How to Specify Example:

25 X **21** **RMB-LV-F3** X **60**

Duct Width | Duct Height | Silencer Model | Silencer Length

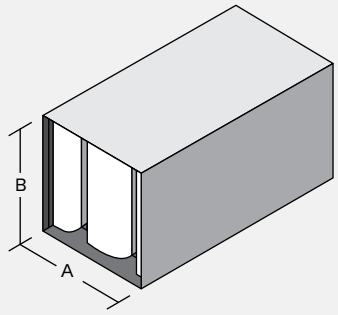

Insertion Loss (IL)

+ : "forward flow" where noise & airflow move in same direction (e.g. supply side)

- : "reverse flow" where noise & airflow move in opposite directions (e.g. return side)

See Silencer Selection Instructions. DIL above 50dB may be limited due to noise flanking around the silencer or along the duct walls. If more than 50dB DIL is required, contact your local Vibro-Acoustics Representative or call **1-800-565-8401**.

Length (in.)	Face Velocity (ft. per min)	Octave Band - Hz/Dynamic Insertion Loss (dB)							
		63	125	250	500	1000	2000	4000	8000
36	- 750	7	10	17	21	23	18	13	11
	+ 750	5	8	15	20	23	19	14	12
60	- 750	9	15	25	35	38	28	17	13
	+ 750	8	13	23	33	38	30	20	14
84	- 750	13	19	35	44	53	39	22	15
	+ 750	11	17	32	43	53	43	25	17
108	- 750	16	24	43	47	55	45	25	18
	+ 750	13	21	39	47	55	48	29	20

Pressure Drop (PD)

Pressure drops are reported in accordance with ASTM E477 methods and are based upon **ideal** flow conditions (5 diameters of straight duct on silencer inlet and 10 on outlet). Less than ideal conditions will result in an increase in pressure drop due to System Effects. See Silencer System Effects Data.

Length (in.)	Face Velocity (ft. per min) / Pressure Drop (in.w.g.)						
	250	500	750	1000	1250	1500	1750
36	0.02	0.06	0.14	0.26	0.40	0.58	0.79
60	0.02	0.09	0.19	0.35	0.54	0.78	1.06
84	0.03	0.10	0.23	0.41	0.65	0.93	1.27
108	0.03	0.11	0.26	0.46	0.71	1.03	1.40

☐ Acceptable (0 - 0.35") ☐ Caution (>0.35") Pressure Drop may be too high for certain applications

Generated Noise (GN)

@ 5 sq.ft. face area

Length (in.)	Face Velocity (ft. per min)	Octave Band - Hz/Generated Noise (dB re 10^{-12} watts)							
		63	125	250	500	1K	2K	4K	8K
All	- 750	50	46	44	47	49	47	35	26
	- 500	51	42	43	43	41	35	23	24
	+ 500	51	39	33	31	32	28	21	24
	+ 750	52	44	38	35	39	39	29	25

GN correction chart at right must be used to correct GN to other face areas. →

Face Area (sq.ft.)	2.5	5	10	20	40	80
dB	-3	0	+3	+6	+9	+12

Cross Section Sizes*

"A" dimension (in.)
12.5-13.5
25-27
50-54
75-81
100-108
125-135
150-162
175-189
200-216
225-243

"B" dimension
ANY SIZE

See Rectangular Silencer Cross-Section Dimensions to ensure selection matches ductwork dimensions.

CERTIFIED PERFORMANCE DATA

VIBRO-ACOUSTICS®
A Swegon Group company

RMB-LV-F4

Rectangular MoldBlock
Low velocity silencer
(<750 fpm)

How to Specify Example:

47 X **22** **RMB-LV-F4** X **60**

Duct Width | Duct Height | Silencer Model | Silencer Length

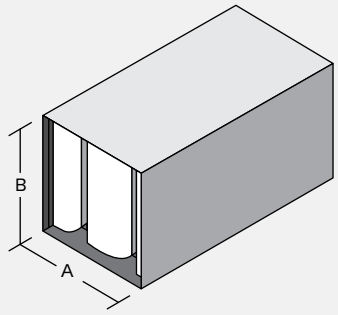

Insertion Loss (IL)

+ : "forward flow" where noise & airflow move in same direction (e.g. supply side)

- : "reverse flow" where noise & airflow move in opposite directions (e.g. return side)

See Silencer Selection Instructions. DIL above 50dB may be limited due to noise flanking around the silencer or along the duct walls. If more than 50dB DIL is required, contact your local Vibro-Acoustics Representative or call **1-800-565-8401**.

Length (in.)	Face Velocity (ft. per min)	Octave Band - Hz/Dynamic Insertion Loss (dB)							
		63	125	250	500	1000	2000	4000	8000
36	- 750	7	9	17	23	24	19	12	10
	+ 750	5	7	15	21	24	20	14	11
60	- 750	9	14	24	38	40	30	17	12
	+ 750	8	12	22	36	40	33	20	14
84	- 750	14	19	34	46	55	42	22	14
	+ 750	11	16	31	45	55	49	26	16
108	- 750	15	24	41	45	55	47	25	17
	+ 750	13	21	38	46	55	52	30	19

Pressure Drop (PD)

Pressure drops are reported in accordance with ASTM E477 methods and are based upon **ideal** flow conditions (5 diameters of straight duct on silencer inlet and 10 on outlet). Less than ideal conditions will result in an increase in pressure drop due to System Effects. See Silencer System Effects Data.

Length (in.)	Face Velocity (ft. per min) / Pressure Drop (in.w.g.)						
	250	500	750	1000	1250	1500	1750
36	0.02	0.06	0.14	0.25	0.39	0.56	0.77
60	0.02	0.09	0.19	0.34	0.53	0.77	1.04
84	0.03	0.10	0.23	0.40	0.63	0.90	1.23
108	0.03	0.10	0.24	0.42	0.66	0.94	1.29

☐ Acceptable (0 - 0.35") ☐ Caution (>0.35") Pressure Drop may be too high for certain applications

Generated Noise (GN)

@ 5 sq.ft. face area

Length (in.)	Face Velocity (ft. per min)	Octave Band - Hz/Generated Noise (dB re 10^{-12} watts)							
		63	125	250	500	1K	2K	4K	8K
All	- 750	49	48	46	49	50	48	35	25
	- 500	51	43	45	44	43	36	23	24
	+ 500	50	39	34	31	32	29	20	23
	+ 750	52	45	39	36	39	40	30	25

GN correction chart at right must be used to correct GN to other face areas. →

Face Area (sq.ft.)	2.5	5	10	20	40	80
dB	-3	0	+3	+6	+9	+12

Cross Section Sizes*

"A" dimension (in.)
11.5-12.5
23-25
46-50
69-75
92-100
115-125
138-150
161-175
207-225

"B" dimension
ANY SIZE

See Rectangular Silencer Cross-Section Dimensions to ensure selection matches ductwork dimensions.

CERTIFIED PERFORMANCE DATA

VIBRO-ACOUSTICS®
A Swegon Group company

RMB-LV-F5

Rectangular MoldBlock
Low velocity silencer
(<750 fpm)

How to Specify Example:

44 X **22** **RMB-LV-F5** X **60**

Duct Width | Duct Height | Silencer Model | Silencer Length

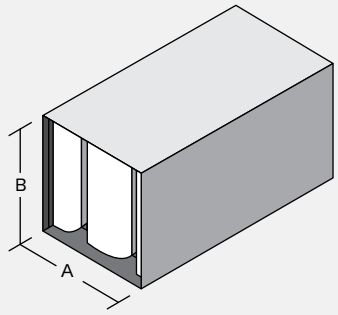

Insertion Loss (IL)

+ : "forward flow" where noise & airflow move in same direction (e.g. supply side)

- : "reverse flow" where noise & airflow move in opposite directions (e.g. return side)

See Silencer Selection Instructions. DIL above 50dB may be limited due to noise flanking around the silencer or along the duct walls. If more than 50dB DIL is required, contact your local Vibro-Acoustics Representative or call **1-800-565-8401**.

Length (in.)	Face Velocity (ft. per min)	Octave Band - Hz/Dynamic Insertion Loss (dB)							
		63	125	250	500	1000	2000	4000	8000
36	- 750	6	8	16	23	27	22	14	10
	+ 750	4	7	14	21	27	22	15	11
60	- 750	8	14	23	38	42	33	20	13
	+ 750	8	12	21	36	42	37	23	16
84	- 750	13	19	33	46	55	45	27	16
	+ 750	11	17	30	45	55	51	31	19
108	- 750	15	24	40	45	55	48	29	19
	+ 750	13	21	36	46	55	54	35	22

Pressure Drop (PD)

Pressure drops are reported in accordance with ASTM E477 methods and are based upon **ideal** flow conditions (5 diameters of straight duct on silencer inlet and 10 on outlet). Less than ideal conditions will result in an increase in pressure drop due to System Effects. See Silencer System Effects Data.

Length (in.)	Face Velocity (ft. per min) / Pressure Drop (in.w.g.)						
	250	500	750	1000	1250	1500	1750
36	0.02	0.07	0.15	0.26	0.41	0.58	0.80
60	0.02	0.09	0.21	0.37	0.58	0.83	1.13
84	0.03	0.11	0.24	0.43	0.67	0.96	1.31
108	0.03	0.11	0.25	0.45	0.70	1.00	1.37

☐ Acceptable (0 - 0.35") ☐ Caution (>0.35") Pressure Drop may be too high for certain applications

Generated Noise (GN)

@ 5 sq.ft. face area

Length (in.)	Face Velocity (ft. per min)	Octave Band - Hz/Generated Noise (dB re 10^{-12} watts)							
		63	125	250	500	1K	2K	4K	8K
All	- 750	50	47	46	49	50	48	36	26
	- 500	51	42	45	45	43	37	23	24
	+ 500	50	39	34	32	31	28	20	23
	+ 750	51	45	39	36	39	40	30	25

GN correction chart at right must be used to correct GN to other face areas. →

Face Area (sq.ft.)	2.5	5	10	20	40	80
dB	-3	0	+3	+6	+9	+12

Cross Section Sizes*

"A" dimension (in.)
10.5-11.5
21-23
42-46
63-69
84-92
105-115
126-138
147-161
168-184
189-207

"B" dimension
ANY SIZE

See Rectangular Silencer Cross-Section Dimensions to ensure selection matches ductwork dimensions.

CERTIFIED PERFORMANCE DATA

VIBRO-ACOUSTICS®
A Swegon Group company

RMB-LV-F6

Rectangular MoldBlock
Low velocity silencer
(<750 fpm)

How to Specify Example:

40 X **21** **RMB-LV-F6** X **60**

Duct Width	Duct Height	Silencer Model	Silencer Length

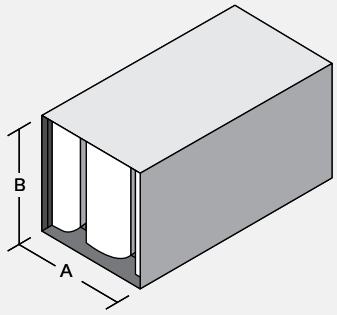

Insertion Loss (IL)

+ : "forward flow" where noise & airflow move in same direction (e.g. supply side)

- : "reverse flow" where noise & airflow move in opposite directions (e.g. return side)

See Silencer Selection Instructions. DIL above 50dB may be limited due to noise flanking around the silencer or along the duct walls. If more than 50dB DIL is required, contact your local Vibro-Acoustics Representative or call **1-800-565-8401**.

Length (in.)	Face Velocity (ft. per min)	Octave Band - Hz/Dynamic Insertion Loss (dB)							
		63	125	250	500	1000	2000	4000	8000
36	- 750	6	8	15	23	30	24	15	11
	+ 750	4	7	14	22	29	24	17	12
60	- 750	8	14	23	37	44	37	22	15
	+ 750	7	12	21	35	44	41	26	17
84	- 750	13	20	32	46	55	47	32	18
	+ 750	10	17	29	45	55	53	36	22
108	- 750	14	25	38	45	55	50	33	21
	+ 750	12	21	35	46	55	55	39	25

Pressure Drop (PD)

Pressure drops are reported in accordance with ASTM E477 methods and are based upon **ideal** flow conditions (5 diameters of straight duct on silencer inlet and 10 on outlet). Less than ideal conditions will result in an increase in pressure drop due to System Effects. See Silencer System Effects Data.

Length (in.)	Face Velocity (ft. per min) / Pressure Drop (in.w.g.)						
	250	500	750	1000	1250	1500	1750
36	0.02	0.07	0.15	0.27	0.42	0.61	0.83
60	0.02	0.10	0.22	0.40	0.62	0.89	1.21
84	0.03	0.11	0.26	0.45	0.71	1.02	1.39
108	0.03	0.12	0.27	0.47	0.74	1.06	1.44

☐ Acceptable (0 - 0.35") ☐ Caution (>0.35") Pressure Drop may be too high for certain applications

Generated Noise (GN)

@ 5 sq.ft. face area

Length (in.)	Face Velocity (ft. per min)	Octave Band - Hz/Generated Noise (dB re 10^{-12} watts)							
		63	125	250	500	1K	2K	4K	8K
All	- 750	50	46	45	48	51	49	36	26
	- 500	51	42	45	45	44	37	24	24
	+ 500	50	39	34	32	30	27	20	23
	+ 750	51	44	39	36	39	40	30	25

GN correction chart at right must be used to correct GN to other face areas. →

Face Area (sq.ft.)	2.5	5	10	20	40	80
dB	-3	0	+3	+6	+9	+12

Cross Section Sizes*

"A" dimension (in.)
9.5-10.5
19-21
38-42
57-63
76-84
95-105
114-126
133-147
152-168
171-189

"B" dimension
ANY SIZE

See Rectangular Silencer Cross-Section Dimensions to ensure selection matches ductwork dimensions.

CERTIFIED PERFORMANCE DATA

VIBRO-ACOUSTICS®
A Swegon Group company

RMB-LV-F7

Rectangular MoldBlock
Low velocity silencer
(<750 fpm)

How to Specify Example:

37 X **21** **RMB-LV-F7** X **60**

Duct Width	Duct Height	Silencer Model	Silencer Length

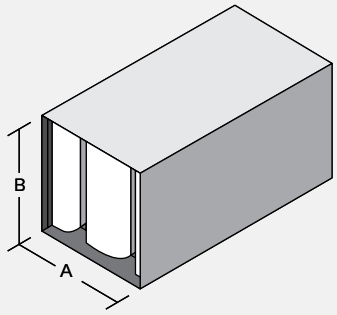

Insertion Loss (IL)

+ : "forward flow" where noise & airflow move in same direction (e.g. supply side)

- : "reverse flow" where noise & airflow move in opposite directions (e.g. return side)

See Silencer Selection Instructions. DIL above 50dB may be limited due to noise flanking around the silencer or along the duct walls. If more than 50dB DIL is required, contact your local Vibro-Acoustics Representative or call **1-800-565-8401**.

Length (in.)	Face Velocity (ft. per min)	Octave Band - Hz/Dynamic Insertion Loss (dB)							
		63	125	250	500	1000	2000	4000	8000
36	- 750	6	8	19	28	31	25	17	12
	+ 750	4	6	17	26	30	26	18	13
60	- 750	8	13	28	44	44	39	25	16
	+ 750	7	11	25	42	44	43	29	20
84	- 750	12	19	40	55	52	48	36	21
	+ 750	10	15	35	54	53	53	40	26
108	- 750	13	22	47	55	52	49	37	23
	+ 750	12	19	42	55	52	55	43	29

Pressure Drop (PD)

Pressure drops are reported in accordance with ASTM E477 methods and are based upon **ideal** flow conditions (5 diameters of straight duct on silencer inlet and 10 on outlet). Less than ideal conditions will result in an increase in pressure drop due to System Effects. See Silencer System Effects Data.

Length (in.)	Face Velocity (ft. per min) / Pressure Drop (in.w.g.)						
	250	500	750	1000	1250	1500	1750
36	0.02	0.07	0.16	0.28	0.44	0.63	0.86
60	0.03	0.11	0.24	0.43	0.66	0.96	1.30
84	0.03	0.12	0.27	0.48	0.75	1.08	1.47
108	0.03	0.12	0.28	0.50	0.78	1.12	1.52

☐ Acceptable (0 - 0.35") ☐ Caution (>0.35") Pressure Drop may be too high for certain applications

Generated Noise (GN)

@ 5 sq.ft. face area

Length (in.)	Face Velocity (ft. per min)	Octave Band - Hz/Generated Noise (dB re 10^{-12} watts)							
		63	125	250	500	1K	2K	4K	8K
All	- 750	50	46	44	48	51	49	37	26
	- 500	51	42	45	46	44	38	24	24
	+ 500	50	39	34	33	30	26	20	23
	+ 750	51	44	38	37	39	39	31	25

GN correction chart at right must be used to correct GN to other face areas. →

Face Area (sq.ft.)	2.5	5	10	20	40	80
dB	-3	0	+3	+6	+9	+12

Cross Section Sizes*

"A" dimension (in.)
8.25-9.5
16.5-19
33-38
49.5-57
66-76
82.5-95
99-114
115.5-133
132-152
148.5-171

"B" dimension
ANY SIZE

See Rectangular Silencer Cross-Section Dimensions to ensure selection matches ductwork dimensions.

RMB-LV-F8

Rectangular MoldBlock
Low velocity silencer
(<750 fpm)

How to Specify Example:

14 X **22** **RMB-LV-F8** X **60**

Duct Width | Duct Height | Silencer Model | Silencer Length

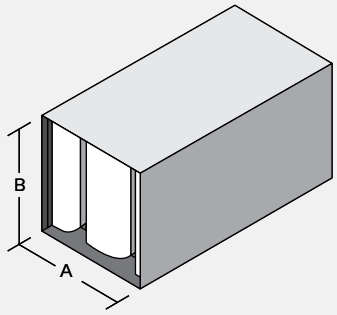

Insertion Loss (IL)

+ : "forward flow" where noise & airflow move in same direction (e.g. supply side)

- : "reverse flow" where noise & airflow move in opposite directions (e.g. return side)

See Silencer Selection Instructions. DIL above 50dB may be limited due to noise flanking around the silencer or along the duct walls. If more than 50dB DIL is required, contact your local Vibro-Acoustics Representative or call **1-800-565-8401**.

Length (in.)	Face Velocity (ft. per min)	Octave Band - Hz/Dynamic Insertion Loss (dB)							
		63	125	250	500	1000	2000	4000	8000
36	- 750	4	9	17	28	30	27	20	17
	+ 750	3	7	15	26	29	26	21	17
60	- 750	7	15	27	42	42	41	28	21
	+ 750	5	12	24	39	41	43	29	22
84	- 750	10	21	37	55	53	55	36	25
	+ 750	7	17	32	53	54	55	38	27
108	- 750	13	27	46	55	55	55	44	29
	+ 750	9	22	41	55	55	55	47	32

Pressure Drop (PD)

Pressure drops are reported in accordance with ASTM E477 methods and are based upon **ideal** flow conditions (5 diameters of straight duct on silencer inlet and 10 on outlet). Less than ideal conditions will result in an increase in pressure drop due to System Effects. See Silencer System Effects Data.

Length (in.)	Face Velocity (ft. per min) / Pressure Drop (in.w.g.)						
	250	500	750	1000	1250	1500	1750
36	0.02	0.08	0.18	0.32	0.50	0.72	0.98
60	0.03	0.10	0.24	0.42	0.66	0.94	1.29
84	0.03	0.13	0.29	0.52	0.81	1.17	1.59
108	0.04	0.16	0.35	0.62	0.97	1.40	1.90

☐ Acceptable (0 - 0.35") ☐ Caution (>0.35") Pressure Drop may be too high for certain applications

Generated Noise (GN)

@ 5 sq.ft. face area

Length (in.)	Face Velocity (ft. per min)	Octave Band - Hz/Generated Noise (dB re 10^{-12} watts)							
		63	125	250	500	1K	2K	4K	8K
All	- 750	51	41	39	45	50	48	36	27
	- 500	53	40	43	49	43	37	24	26
	+ 500	51	38	34	35	26	22	21	26
	+ 750	52	43	35	34	36	36	28	26

GN correction chart at right must be used to correct GN to other face areas. →

Face Area (sq.ft.)	2.5	5	10	20	40	80
dB	-3	0	+3	+6	+9	+12

Cross Section Sizes*

"A" dimension (in.)
6.75-8.25
13.5-16.5
27-33
40.5-49.5
54-66
67.5-82.5
81-99
94.5-115.5
108-132
121.5-148.5

"B" dimension
ANY SIZE

See Rectangular Silencer Cross-Section Dimensions to ensure selection matches ductwork dimensions.

CERTIFIED PERFORMANCE DATA

VIBRO-ACOUSTICS®
A Swegon Group company

RMB-LV-F9

Rectangular MoldBlock
Low velocity silencer
(<750 fpm)

How to Specify Example:

21 X **21** **RMB-LV-F9** X **60**

Duct Width	Duct Height	Silencer Model	Silencer Length

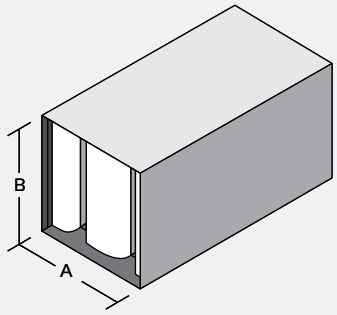

Insertion Loss (IL)

+ : "forward flow" where noise & airflow move in same direction (e.g. supply side)

- : "reverse flow" where noise & airflow move in opposite directions (e.g. return side)

See Silencer Selection Instructions. DIL above 50dB may be limited due to noise flanking around the silencer or along the duct walls. If more than 50dB DIL is required, contact your local Vibro-Acoustics Representative or call **1-800-565-8401**.

Length (in.)	Face Velocity (ft. per min)	Octave Band - Hz/Dynamic Insertion Loss (dB)							
		63	125	250	500	1000	2000	4000	8000
36	- 750	5	7	16	28	39	32	21	13
	+ 750	3	6	14	26	38	32	23	15
60	- 750	8	12	25	42	50	50	32	20
	+ 750	6	10	22	40	51	55	38	25
84	- 750	11	21	37	53	52	55	50	27
	+ 750	8	15	31	52	53	55	55	35
108	- 750	12	23	41	54	51	53	50	29
	+ 750	10	18	36	54	53	55	55	38

Pressure Drop (PD)

Pressure drops are reported in accordance with ASTM E477 methods and are based upon **ideal** flow conditions (5 diameters of straight duct on silencer inlet and 10 on outlet). Less than ideal conditions will result in an increase in pressure drop due to System Effects. See Silencer System Effects Data.

Length (in.)	Face Velocity (ft. per min) / Pressure Drop (in.w.g.)						
	250	500	750	1000	1250	1500	1750
36	0.02	0.08	0.17	0.31	0.48	0.70	0.95
60	0.03	0.13	0.29	0.51	0.80	1.15	1.56
84	0.04	0.14	0.32	0.56	0.88	1.26	1.72
108	0.04	0.14	0.32	0.57	0.90	1.29	1.76

☐ Acceptable (0 - 0.35") ☐ Caution (>0.35") Pressure Drop may be too high for certain applications

Generated Noise (GN)

@ 5 sq.ft. face area

Length (in.)	Face Velocity (ft. per min)	Octave Band - Hz/Generated Noise (dB re 10^{-12} watts)							
		63	125	250	500	1K	2K	4K	8K
All	- 750	51	44	41	46	52	51	39	27
	- 500	51	41	44	48	46	40	26	24
	+ 500	51	38	34	34	27	23	19	23
	+ 750	50	43	38	37	40	39	31	25

GN correction chart at right must be used to correct GN to other face areas. →

Face Area (sq.ft.)	2.5	5	10	20	40	80
dB	-3	0	+3	+6	+9	+12

Cross Section Sizes*

"A" dimension (in.)
5-6.75
10-13.5
20-27
30-40.5
40-54
50-67.5
60-81
70-94.5
80-108
90-121.5

"B" dimension
ANY SIZE

See Rectangular Silencer Cross-Section Dimensions to ensure selection matches ductwork dimensions.

CERTIFIED PERFORMANCE DATA

VIBRO-ACOUSTICS®
A Swegon Group company

RMB-MV-F1

Rectangular MoldBlock
Medium velocity silencer
(<1250 fpm)

How to Specify Example:

32 X **21** **RMB-MV-F1** X **60**

Duct Width	Duct Height	Silencer Model	Silencer Length

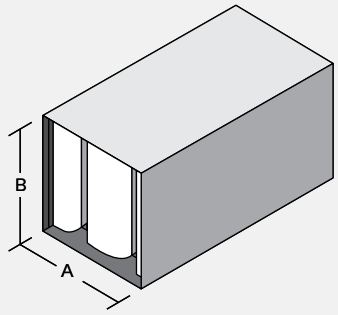

Insertion Loss (IL)

+ : "forward flow" where noise & airflow move in same direction (e.g. supply side)

- : "reverse flow" where noise & airflow move in opposite directions (e.g. return side)

See Silencer Selection Instructions. DIL above 50dB may be limited due to noise flanking around the silencer or along the duct walls. If more than 50dB DIL is required, contact your local Vibro-Acoustics Representative or call **1-800-565-8401**.

Length (in.)	Face Velocity (ft. per min)	Octave Band - Hz/Dynamic Insertion Loss (dB)							
		63	125	250	500	1000	2000	4000	8000
36	- 1250	5	10	14	15	18	14	13	11
	+ 1250	4	8	12	14	17	15	13	11
60	- 1250	7	13	22	24	27	20	16	13
	+ 1250	6	11	19	22	26	20	16	13
84	- 1250	10	17	29	33	36	26	18	15
	+ 1250	8	14	26	30	36	26	19	15
108	- 1250	12	21	37	41	45	32	21	17
	+ 1250	10	17	33	38	46	30	23	18

Pressure Drop (PD)

Pressure drops are reported in accordance with ASTM E477 methods and are based upon **ideal** flow conditions (5 diameters of straight duct on silencer inlet and 10 on outlet). Less than ideal conditions will result in an increase in pressure drop due to System Effects. See Silencer System Effects Data.

Length (in.)	Face Velocity (ft. per min) / Pressure Drop (in.w.g.)						
	500	750	1000	1250	1500	1750	2000
36	0.03	0.07	0.13	0.21	0.30	0.40	0.53
60	0.04	0.10	0.18	0.28	0.40	0.54	0.70
84	0.05	0.12	0.22	0.34	0.49	0.67	0.88
108	0.07	0.15	0.26	0.41	0.59	0.81	1.06

☐ Acceptable (0 - 0.35") ☐ Caution (>0.35") Pressure Drop may be too high for certain applications

Generated Noise (GN)

@ 5 sq.ft. face area

Length (in.)	Face Velocity (ft. per min)	Octave Band - Hz/Generated Noise (dB re 10^{-12} watts)							
		63	125	250	500	1K	2K	4K	8K
All	- 1250	53	50	49	50	52	50	40	28
	- 750	50	43	42	41	41	34	22	26
	+ 750	51	39	35	33	37	33	23	26
	+ 1250	56	51	45	43	45	47	40	29

GN correction chart at right must be used to correct GN to other face areas. →

Face Area (sq.ft.)	2.5	5	10	20	40	80
dB	-3	0	+3	+6	+9	+12

Cross Section Sizes*

"A" dimension (in.)
14.5-15.5
29-31
58-62
87-63
116-124
145-155
174-186
203-217
232-248

"B" dimension
ANY SIZE

See Rectangular Silencer Cross-Section Dimensions to ensure selection matches ductwork dimensions.

CERTIFIED PERFORMANCE DATA

VIBRO-ACOUSTICS®
A Swegon Group company

RMB-MV-F2

Rectangular MoldBlock
Medium velocity silencer
(<1250 fpm)

How to Specify Example:

27 X **22** **RMB-MV-F2** X **60**

Duct Width	Duct Height	Silencer Model	Silencer Length

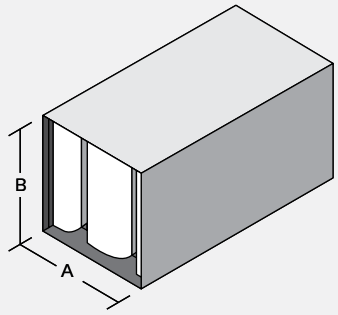

Insertion Loss (IL)

+ : "forward flow" where noise & airflow move in same direction (e.g. supply side)

- : "reverse flow" where noise & airflow move in opposite directions (e.g. return side)

See Silencer Selection Instructions. DIL above 50dB may be limited due to noise flanking around the silencer or along the duct walls. If more than 50dB DIL is required, contact your local Vibro-Acoustics Representative or call **1-800-565-8401**.

Length (in.)	Face Velocity (ft. per min)	Octave Band - Hz/Dynamic Insertion Loss (dB)							
		63	125	250	500	1000	2000	4000	8000
36	- 1250	5	9	14	16	18	14	12	10
	+ 1250	4	7	12	15	17	15	12	10
60	- 1250	6	13	22	26	28	20	15	12
	+ 1250	5	10	19	24	27	21	16	12
84	- 1250	11	17	28	36	38	26	18	14
	+ 1250	8	14	25	33	38	27	19	15
108	- 1250	12	21	35	42	48	32	20	15
	+ 1250	10	17	32	41	48	32	22	17

Pressure Drop (PD)

Pressure drops are reported in accordance with ASTM E477 methods and are based upon **ideal** flow conditions (5 diameters of straight duct on silencer inlet and 10 on outlet). Less than ideal conditions will result in an increase in pressure drop due to System Effects. See Silencer System Effects Data.

Length (in.)	Face Velocity (ft. per min) / Pressure Drop (in.w.g.)						
	500	750	1000	1250	1500	1750	2000
36	0.03	0.07	0.12	0.19	0.27	0.37	0.49
60	0.04	0.09	0.16	0.26	0.37	0.50	0.66
84	0.05	0.11	0.20	0.31	0.45	0.61	0.80
108	0.06	0.13	0.24	0.37	0.54	0.73	0.96

☐ Acceptable (0 - 0.35") ☐ Caution (>0.35") Pressure Drop may be too high for certain applications

Generated Noise (GN)

@ 5 sq.ft. face area

Length (in.)	Face Velocity (ft. per min)	Octave Band - Hz/Generated Noise (dB re 10^{-12} watts)							
		63	125	250	500	1K	2K	4K	8K
All	- 1250	53	50	48	50	52	51	40	28
	- 750	50	43	42	42	42	34	23	26
	+ 750	51	39	35	33	36	33	23	26
	+ 1250	56	51	45	43	45	47	39	29

GN correction chart at right must be used to correct GN to other face areas. →

Face Area (sq.ft.)	2.5	5	10	20	40	80
dB	-3	0	+3	+6	+9	+12

Cross Section Sizes*

"A" dimension (in.)
13.5–14.5
27–29
54–58
81–87
108–116
135–145
162–174
189–203
216–232

"B" dimension
ANY SIZE

See Rectangular Silencer Cross-Section Dimensions to ensure selection matches ductwork dimensions.

CERTIFIED PERFORMANCE DATA

VIBRO-ACOUSTICS®
A Swegon Group company

RMB-MV-F3

Rectangular MoldBlock
Medium velocity silencer
(<1250 fpm)

How to Specify Example:

25 X **21** **RMB-MV-F3** X **60**

Duct Width | Duct Height | Silencer Model | Silencer Length

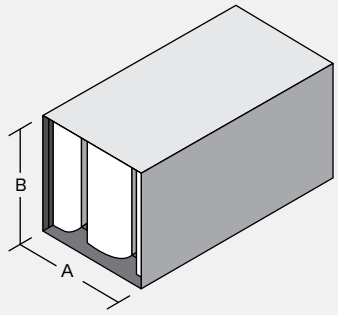

Insertion Loss (IL)

+ : "forward flow" where noise & airflow move in same direction (e.g. supply side)

- : "reverse flow" where noise & airflow move in opposite directions (e.g. return side)

See Silencer Selection Instructions. DIL above 50dB may be limited due to noise flanking around the silencer or along the duct walls. If more than 50dB DIL is required, contact your local Vibro-Acoustics Representative or call **1-800-565-8401**.

Length (in.)	Face Velocity (ft. per min)	Octave Band - Hz/Dynamic Insertion Loss (dB)							
		63	125	250	500	1000	2000	4000	8000
36	- 1250	4	8	13	18	18	14	11	9
	+ 1250	4	7	12	16	18	15	12	9
60	- 1250	5	12	21	29	29	21	15	11
	+ 1250	4	10	19	26	29	22	16	12
84	- 1250	11	17	27	40	40	27	17	13
	+ 1250	9	13	24	37	40	29	19	14
108	- 1250	12	21	34	42	50	32	19	14
	+ 1250	9	17	31	43	50	34	22	16

Pressure Drop (PD)

Pressure drops are reported in accordance with ASTM E477 methods and are based upon **ideal** flow conditions (5 diameters of straight duct on silencer inlet and 10 on outlet). Less than ideal conditions will result in an increase in pressure drop due to System Effects. See Silencer System Effects Data.

Length (in.)	Face Velocity (ft. per min) / Pressure Drop (in.w.g.)						
	500	750	1000	1250	1500	1750	2000
36	0.03	0.06	0.11	0.17	0.25	0.34	0.44
60	0.04	0.09	0.15	0.24	0.34	0.47	0.61
84	0.05	0.10	0.18	0.28	0.41	0.55	0.72
108	0.05	0.15	0.21	0.34	0.48	0.66	0.86

☐ Acceptable (0 - 0.35") ☐ Caution (>0.35") Pressure Drop may be too high for certain applications

Generated Noise (GN)

@ 5 sq.ft. face area

Length (in.)	Face Velocity (ft. per min)	Octave Band - Hz/Generated Noise (dB re 10^{-12} watts)							
		63	125	250	500	1K	2K	4K	8K
All	- 1250	53	50	48	50	52	51	41	29
	- 750	50	43	43	43	42	35	23	26
	+ 750	51	39	35	33	35	32	22	26
	+ 1250	56	51	44	42	45	47	39	29

GN correction chart at right must be used to correct GN to other face areas. →

Face Area (sq.ft.)	2.5	5	10	20	40	80
dB	-3	0	+3	+6	+9	+12

Cross Section Sizes*

"A" dimension (in.)
12.5–13.5
25–27
50–54
75–81
100–108
125–135
150–162
175–189
200–216
225–243

"B" dimension
ANY SIZE

See Rectangular Silencer Cross-Section Dimensions to ensure selection matches ductwork dimensions.

CERTIFIED PERFORMANCE DATA

VIBRO-ACOUSTICS®
A Swegon Group company

RMB-MV-F4

Rectangular MoldBlock
Medium velocity silencer
(<1250 fpm)

How to Specify Example:

47 X **22** **RMB-MV-F4** X **60**

Duct Width | Duct Height | Silencer Model | Silencer Length

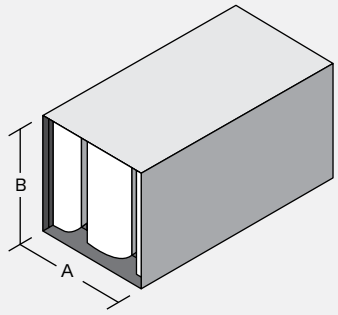

Insertion Loss (IL)

+ : "forward flow" where noise & airflow move in same direction (e.g. supply side)

- : "reverse flow" where noise & airflow move in opposite directions (e.g. return side)

See Silencer Selection Instructions. DIL above 50dB may be limited due to noise flanking around the silencer or along the duct walls. If more than 50dB DIL is required, contact your local Vibro-Acoustics Representative or call **1-800-565-8401**.

Length (in.)	Face Velocity (ft. per min)	Octave Band - Hz/Dynamic Insertion Loss (dB)							
		63	125	250	500	1000	2000	4000	8000
36	- 1250	4	7	13	19	18	14	10	7
	+ 1250	4	6	11	17	18	14	11	8
60	- 1250	4	12	20	32	30	21	14	10
	+ 1250	4	9	18	29	30	23	15	11
84	- 1250	12	16	26	43	41	27	16	11
	+ 1250	10	13	23	40	42	31	19	13
108	- 1250	12	21	32	42	52	33	19	12
	+ 1250	9	17	29	46	53	36	21	15

Pressure Drop (PD)

Pressure drops are reported in accordance with ASTM E477 methods and are based upon **ideal** flow conditions (5 diameters of straight duct on silencer inlet and 10 on outlet). Less than ideal conditions will result in an increase in pressure drop due to System Effects. See Silencer System Effects Data.

Length (in.)	Face Velocity (ft. per min) / Pressure Drop (in.w.g.)						
	500	750	1000	1250	1500	1750	2000
36	0.03	0.06	0.10	0.16	0.23	0.31	0.40
60	0.04	0.08	0.14	0.22	0.32	0.43	0.56
84	0.04	0.09	0.16	0.25	0.36	0.49	0.64
108	0.05	0.11	0.19	0.30	0.43	0.58	0.76

☐ Acceptable (0 - 0.35") ☐ Caution (>0.35") Pressure Drop may be too high for certain applications

Generated Noise (GN)

@ 5 sq.ft. face area

Length (in.)	Face Velocity (ft. per min)	Octave Band - Hz/Generated Noise (dB re 10^{-12} watts)							
		63	125	250	500	1K	2K	4K	8K
All	- 1250	53	50	48	50	52	52	42	29
	- 750	50	43	43	43	43	35	23	26
	+ 750	51	39	35	33	35	31	22	26
	+ 1250	56	51	44	42	45	46	39	29

GN correction chart at right must be used to correct GN to other face areas. →

Face Area (sq.ft.)	2.5	5	10	20	40	80
dB	-3	0	+3	+6	+9	+12

Cross Section Sizes*

"A" dimension (in.)
11.5–12.5
23–25
46–50
69–75
92–100
115–125
138–150
161–175
207–225

"B" dimension
ANY SIZE

See Rectangular Silencer Cross-Section Dimensions to ensure selection matches ductwork dimensions.

CERTIFIED PERFORMANCE DATA

VIBRO-ACOUSTICS®
A Swegon Group company

RMB-MV-F5

Rectangular MoldBlock
Medium velocity silencer
(<1250 fpm)

How to Specify Example:

44 X **22** **RMB-MV-F5** X **60**

Duct Width | Duct Height | Silencer Model | Silencer Length

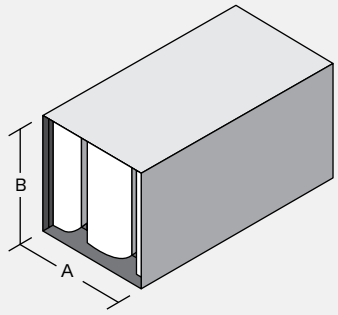

Insertion Loss (IL)

+ : "forward flow" where noise & airflow move in same direction (e.g. supply side)

- : "reverse flow" where noise & airflow move in opposite directions (e.g. return side)

See Silencer Selection Instructions. DIL above 50dB may be limited due to noise flanking around the silencer or along the duct walls. If more than 50dB DIL is required, contact your local Vibro-Acoustics Representative or call **1-800-565-8401**.

Length (in.)	Face Velocity (ft. per min)	Octave Band - Hz/Dynamic Insertion Loss (dB)							
		63	125	250	500	1000	2000	4000	8000
36	- 1250	4	7	13	19	21	16	11	7
	+ 1250	4	6	11	17	21	16	12	8
60	- 1250	4	11	20	31	34	25	16	11
	+ 1250	3	9	17	28	34	27	18	12
84	- 1250	12	17	25	43	44	32	20	13
	+ 1250	9	13	22	40	44	36	23	16
108	- 1250	12	21	31	42	52	36	22	13
	+ 1250	8	17	28	45	54	40	25	17

Pressure Drop (PD)

Pressure drops are reported in accordance with ASTM E477 methods and are based upon **ideal** flow conditions (5 diameters of straight duct on silencer inlet and 10 on outlet). Less than ideal conditions will result in an increase in pressure drop due to System Effects. See Silencer System Effects Data.

Length (in.)	Face Velocity (ft. per min) / Pressure Drop (in.w.g.)						
	500	750	1000	1250	1500	1750	2000
36	0.03	0.06	0.10	0.16	0.23	0.31	0.41
60	0.04	0.08	0.15	0.23	0.33	0.45	0.59
84	0.05	0.10	0.19	0.29	0.42	0.57	0.74
108	0.05	0.11	0.20	0.31	0.45	0.61	0.80

☐ Acceptable (0 - 0.35") ☐ Caution (>0.35") Pressure Drop may be too high for certain applications

Generated Noise (GN)

@ 5 sq.ft. face area

Length (in.)	Face Velocity (ft. per min)	Octave Band - Hz/Generated Noise (dB re 10^{-12} watts)							
		63	125	250	500	1K	2K	4K	8K
All	- 1250	53	50	47	49	52	52	42	30
	- 750	50	43	43	44	43	36	24	26
	+ 750	51	40	35	33	34	31	22	26
	+ 1250	56	51	44	42	44	46	39	28

GN correction chart at right must be used to correct GN to other face areas. →

Face Area (sq.ft.)	2.5	5	10	20	40	80
dB	-3	0	+3	+6	+9	+12

Cross Section Sizes*

"A" dimension (in.)
10.5–11.5
21–23
42–46
63–69
84–92
105–115
126–138
147–161
168–184
189–207

"B" dimension
ANY SIZE

See Rectangular Silencer Cross-Section Dimensions to ensure selection matches ductwork dimensions.

CERTIFIED PERFORMANCE DATA

VIBRO-ACOUSTICS®
A Swegon Group company

RMB-MV-F6

Rectangular MoldBlock
Medium velocity silencer
(<1250 fpm)

How to Specify Example:

40 X **21** **RMB-MV-F6** X **60**

Duct Width | Duct Height | Silencer Model | Silencer Length

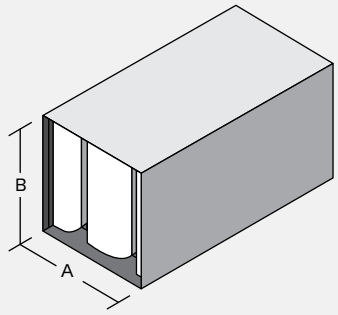

Insertion Loss (IL)

+ : "forward flow" where noise & airflow move in same direction (e.g. supply side)

- : "reverse flow" where noise & airflow move in opposite directions (e.g. return side)

See Silencer Selection Instructions. DIL above 50dB may be limited due to noise flanking around the silencer or along the duct walls. If more than 50dB DIL is required, contact your local Vibro-Acoustics Representative or call **1-800-565-8401**.

Length (in.)	Face Velocity (ft. per min)	Octave Band - Hz/Dynamic Insertion Loss (dB)							
		63	125	250	500	1000	2000	4000	8000
36	- 1250	4	7	12	19	24	18	12	8
	+ 1250	3	6	10	17	23	18	13	9
60	- 1250	4	11	19	31	38	28	18	11
	+ 1250	3	9	16	28	38	31	20	13
84	- 1250	12	17	25	44	47	36	23	14
	+ 1250	9	13	22	40	47	40	27	18
108	- 1250	11	20	30	42	52	39	25	14
	+ 1250	8	17	27	45	55	44	30	20

Pressure Drop (PD)

Pressure drops are reported in accordance with ASTM E477 methods and are based upon **ideal** flow conditions (5 diameters of straight duct on silencer inlet and 10 on outlet). Less than ideal conditions will result in an increase in pressure drop due to System Effects. See Silencer System Effects Data.

Length (in.)	Face Velocity (ft. per min) / Pressure Drop (in.w.g.)						
	500	750	1000	1250	1500	1750	2000
36	0.03	0.06	0.10	0.16	0.23	0.32	0.41
60	0.04	0.09	0.16	0.24	0.35	0.48	0.63
84	0.05	0.12	0.21	0.33	0.47	0.64	0.84
108	0.05	0.12	0.21	0.33	0.47	0.64	0.84

☐ Acceptable (0 - 0.35") ☐ Caution (>0.35") Pressure Drop may be too high for certain applications

Generated Noise (GN)

@ 5 sq.ft. face area

Length (in.)	Face Velocity (ft. per min)	Octave Band - Hz/Generated Noise (dB re 10^{-12} watts)							
		63	125	250	500	1K	2K	4K	8K
All	- 1250	53	50	47	49	52	53	43	30
	- 750	50	43	43	45	43	36	24	26
	+ 750	51	40	35	33	33	30	22	26
	+ 1250	56	51	44	42	44	46	38	28

GN correction chart at right must be used to correct GN to other face areas. →

Face Area (sq.ft.)	2.5	5	10	20	40	80
dB	-3	0	+3	+6	+9	+12

Cross Section Sizes*

"A" dimension (in.)
9.5–10.5
19–21
38–42
57–63
76–84
95–105
114–126
133–147
152–168
171–189

"B" dimension
ANY SIZE

See Rectangular Silencer Cross-Section Dimensions to ensure selection matches ductwork dimensions.

RMB-MV-F7

Rectangular MoldBlock
Medium velocity silencer
(<1250 fpm)

How to Specify Example:

37 X **21** **RMB-MV-F7** X **60**

Duct Width	Duct Height	Silencer Model	Silencer Length

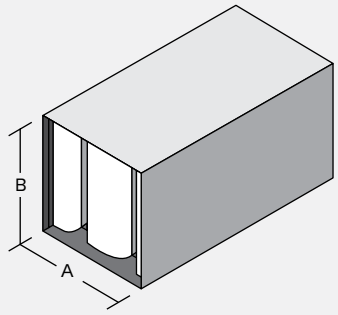

Insertion Loss (IL)

+ : "forward flow" where noise & airflow move in same direction (e.g. supply side)

- : "reverse flow" where noise & airflow move in opposite directions (e.g. return side)

See Silencer Selection Instructions. DIL above 50dB may be limited due to noise flanking around the silencer or along the duct walls. If more than 50dB DIL is required, contact your local Vibro-Acoustics Representative or call **1-800-565-8401**.

Length (in.)	Face Velocity (ft. per min)	Octave Band - Hz/Dynamic Insertion Loss (dB)							
		63	125	250	500	1000	2000	4000	8000
36	- 1250	4	6	15	23	25	19	13	8
	+ 1250	3	5	12	21	24	19	14	10
60	- 1250	4	10	23	37	39	30	19	12
	+ 1250	3	8	20	34	39	33	22	15
84	- 1250	12	15	32	53	47	39	26	16
	+ 1250	9	12	27	49	47	43	30	21
108	- 1250	11	18	37	50	50	40	28	16
	+ 1250	8	15	33	53	53	46	33	22

Pressure Drop (PD)

Pressure drops are reported in accordance with ASTM E477 methods and are based upon **ideal** flow conditions (5 diameters of straight duct on silencer inlet and 10 on outlet). Less than ideal conditions will result in an increase in pressure drop due to System Effects. See Silencer System Effects Data.

Length (in.)	Face Velocity (ft. per min) / Pressure Drop (in.w.g.)						
	500	750	1000	1250	1500	1750	2000
36	0.03	0.06	0.10	0.16	0.24	0.32	0.42
60	0.04	0.09	0.17	0.26	0.37	0.51	0.66
84	0.06	0.13	0.23	0.37	0.53	0.72	0.94
108	0.05	0.12	0.22	0.34	0.49	0.67	0.88

☐ Acceptable (0 - 0.35") ☐ Caution (>0.35") Pressure Drop may be too high for certain applications

Generated Noise (GN)

@ 5 sq.ft. face area

Length (in.)	Face Velocity (ft. per min)	Octave Band - Hz/Generated Noise (dB re 10^{-12} watts)							
		63	125	250	500	1K	2K	4K	8K
All	- 1250	53	50	47	49	52	54	43	31
	- 750	50	42	43	45	44	37	24	26
	+ 750	51	40	35	33	32	29	22	26
	+ 1250	56	51	43	42	44	45	38	28

GN correction chart at right must be used to correct GN to other face areas. →

Face Area (sq.ft.)	2.5	5	10	20	40	80
dB	-3	0	+3	+6	+9	+12

Cross Section Sizes*

"A" dimension (in.)
8.25–9.5
16.5–19
33–38
49.5–57
66–76
82.5–95
99–114
115.5–133
132–152
148.5–171

"B" dimension
ANY SIZE

See Rectangular Silencer Cross-Section Dimensions to ensure selection matches ductwork dimensions.

CERTIFIED PERFORMANCE DATA

VIBRO-ACOUSTICS®
A Swegon Group company

RMB-MV-F8

Rectangular MoldBlock
Medium velocity silencer
(<1250 fpm)

How to Specify Example:

14 X **22** **RMB-MV-F8** X **60**

Duct Width | Duct Height | Silencer Model | Silencer Length

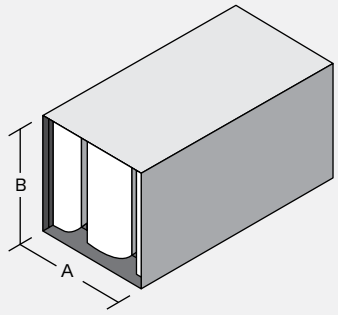

Insertion Loss (IL)

+ : "forward flow" where noise & airflow move in same direction (e.g. supply side)

- : "reverse flow" where noise & airflow move in opposite directions (e.g. return side)

See Silencer Selection Instructions. DIL above 50dB may be limited due to noise flanking around the silencer or along the duct walls. If more than 50dB DIL is required, contact your local Vibro-Acoustics Representative or call **1-800-565-8401**.

Length (in.)	Face Velocity (ft. per min)	Octave Band - Hz/Dynamic Insertion Loss (dB)							
		63	125	250	500	1000	2000	4000	8000
36	- 1250	4	7	13	22	25	21	17	15
	+ 1250	2	5	11	20	24	21	17	14
60	- 1250	6	11	21	35	37	32	22	17
	+ 1250	5	9	18	32	37	34	24	18
84	- 1250	9	15	30	47	50	43	28	20
	+ 1250	7	12	25	44	49	46	30	22
108	- 1250	12	20	38	55	55	54	33	23
	+ 1250	9	15	32	55	55	55	37	27

Pressure Drop (PD)

Pressure drops are reported in accordance with ASTM E477 methods and are based upon **ideal** flow conditions (5 diameters of straight duct on silencer inlet and 10 on outlet). Less than ideal conditions will result in an increase in pressure drop due to System Effects. See Silencer System Effects Data.

Length (in.)	Face Velocity (ft. per min) / Pressure Drop (in.w.g.)						
	500	750	1000	1250	1500	1750	2000
36	0.04	0.09	0.16	0.24	0.35	0.47	0.62
60	0.05	0.12	0.21	0.33	0.47	0.64	0.83
84	0.07	0.15	0.26	0.41	0.59	0.80	1.05
108	0.08	0.18	0.32	0.49	0.71	0.97	1.26

☐ Acceptable (0 - 0.35") ☐ Caution (>0.35") Pressure Drop may be too high for certain applications

Generated Noise (GN)

@ 5 sq.ft. face area

Length (in.)	Face Velocity (ft. per min)	Octave Band - Hz/Generated Noise (dB re 10^{-12} watts)							
		63	125	250	500	1K	2K	4K	8K
All	- 1250	53	50	47	49	52	54	43	31
	- 750	50	42	43	45	44	37	24	26
	+ 750	51	40	35	33	32	29	22	26
	+ 1250	56	51	43	42	44	45	38	28

GN correction chart at right must be used to correct GN to other face areas. →

Face Area (sq.ft.)	2.5	5	10	20	40	80
dB	-3	0	+3	+6	+9	+12

Cross Section Sizes*

"A" dimension (in.)
6.75–8.25
13.5–16.5
27–33
40.5–49.5
54–66
67.5–82.5
81–99
94.5–115.5
108–132
121.5–148.5

"B" dimension
ANY SIZE

See Rectangular Silencer Cross-Section Dimensions to ensure selection matches ductwork dimensions.

RMB-MV-F9

Rectangular MoldBlock
Medium velocity silencer
(<1250 fpm)

How to Specify Example:

21 X **21** **RMB-MV-F9** X **60**

Duct Width | Duct Height | Silencer Model | Silencer Length

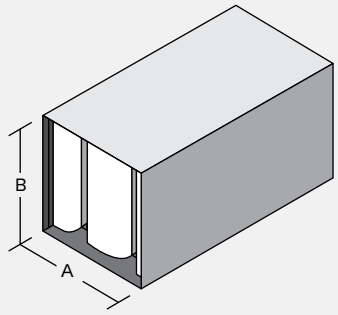

Insertion Loss (IL)

+ : "forward flow" where noise & airflow move in same direction (e.g. supply side)

- : "reverse flow" where noise & airflow move in opposite directions (e.g. return side)

See Silencer Selection Instructions. DIL above 50dB may be limited due to noise flanking around the silencer or along the duct walls. If more than 50dB DIL is required, contact your local Vibro-Acoustics Representative or call **1-800-565-8401**.

Length (in.)	Face Velocity (ft. per min)	Octave Band - Hz/Dynamic Insertion Loss (dB)							
		63	125	250	500	1000	2000	4000	8000
36	- 1250	4	6	13	23	33	24	15	10
	+ 1250	3	4	10	2	32	25	17	12
60	- 1250	4	10	20	37	50	40	24	14
	+ 1250	2	7	16	33	50	43	28	19
84	- 1250	12	16	32	53	55	52	36	21
	+ 1250	8	12	26	49	54	55	42	28
108	- 1250	10	18	33	49	50	49	37	20
	+ 1250	7	14	28	51	55	55	46	29

Pressure Drop (PD)

Pressure drops are reported in accordance with ASTM E477 methods and are based upon **ideal** flow conditions (5 diameters of straight duct on silencer inlet and 10 on outlet). Less than ideal conditions will result in an increase in pressure drop due to System Effects. See Silencer System Effects Data.

Length (in.)	Face Velocity (ft. per min) / Pressure Drop (in.w.g.)						
	500	750	1000	1250	1500	1750	2000
36	0.03	0.06	0.11	0.17	0.25	0.34	0.44
60	0.05	0.11	0.19	0.30	0.43	0.58	0.76
84	0.08	0.17	0.31	0.48	0.70	0.95	1.24
108	0.06	0.14	0.25	0.39	0.56	0.77	1.00

☐ Acceptable (0 - 0.35") ☐ Caution (>0.35") Pressure Drop may be too high for certain applications

Cross Section Sizes*

"A" dimension (in.)
5–6.75
10–13.5
20–27
30–40.5
40–54
50–67.5
60–81
70–94.5
80–108
90–121.5

"B" dimension
ANY SIZE

See Rectangular Silencer Cross-Section Dimensions to ensure selection matches ductwork dimensions.

Generated Noise (GN)

@ 5 sq.ft. face area

Length (in.)	Face Velocity (ft. per min)	Octave Band - Hz/Generated Noise (dB re 10^{-12} watts)							
		63	125	250	500	1K	2K	4K	8K
All	- 1250	54	51	46	49	52	56	45	32
	- 750	49	42	43	48	45	38	25	26
	+ 750	51	40	34	33	29	27	21	26
	+ 1250	56	50	43	42	43	44	37	28

GN correction chart at right must be used to correct GN to other face areas. →

Face Area (sq.ft.)	2.5	5	10	20	40	80
dB	-3	0	+3	+6	+9	+12

CERTIFIED PERFORMANCE DATA

VIBRO-ACOUSTICS®
A Swegon Group company

RMB-HV-F1

Rectangular MoldBlock
High velocity silencer
(<2000 fpm)

How to Specify Example:

32 X **21** **RMB-HV-F1** X **60**

Duct Width	Duct Height	Silencer Model	Silencer Length

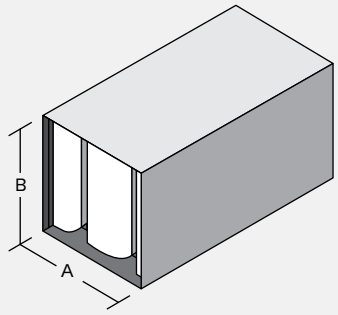

Insertion Loss (IL)

+ : "forward flow" where noise & airflow move in same direction (e.g. supply side)

- : "reverse flow" where noise & airflow move in opposite directions (e.g. return side)

See Silencer Selection Instructions. DIL above 50dB may be limited due to noise flanking around the silencer or along the duct walls. If more than 50dB DIL is required, contact your local Vibro-Acoustics Representative or call **1-800-565-8401**.

Length (in.)	Face Velocity (ft. per min)	Octave Band - Hz/Dynamic Insertion Loss (dB)							
		63	125	250	500	1000	2000	4000	8000
36	- 2000	3	8	11	12	14	13	12	10
	+ 2000	2	5	9	11	13	11	10	8
60	- 2000	5	11	17	19	19	16	14	11
	+ 2000	4	8	14	17	19	15	13	10
84	- 2000	7	15	23	26	25	19	15	13
	+ 2000	5	11	20	23	25	18	16	13
108	- 2000	8	19	29	33	31	22	17	14
	+ 2000	7	14	25	29	31	21	18	15

Pressure Drop (PD)

Pressure drops are reported in accordance with ASTM E477 methods and are based upon **ideal** flow conditions (5 diameters of straight duct on silencer inlet and 10 on outlet). Less than ideal conditions will result in an increase in pressure drop due to System Effects. See Silencer System Effects Data.

Length (in.)	Face Velocity (ft. per min) / Pressure Drop (in.w.g.)						
	500	1000	1500	1750	2000	2250	2500
36	0.01	0.04	0.09	0.12	0.16	0.20	0.25
60	0.01	0.05	0.12	0.17	0.22	0.28	0.34
84	0.02	0.07	0.16	0.21	0.28	0.35	0.44
108	0.02	0.09	0.19	0.26	0.34	0.43	0.53

☐ Acceptable (0 - 0.35") ☐ Caution (>0.35") Pressure Drop may be too high for certain applications

Cross Section Sizes*

"A" dimension (in.)
14.5–15.5
29–31
58–62
87–93
116–124
145–155
174–186
203–217
232–248

"B" dimension
ANY SIZE

See Rectangular Silencer Cross-Section Dimensions to ensure selection matches ductwork dimensions.

Generated Noise (GN)

@ 5 sq.ft. face area

Length (in.)	Face Velocity (ft. per min)	Octave Band - Hz/Generated Noise (dB re 10^{-12} watts)							
		63	125	250	500	1K	2K	4K	8K
All	- 2000	58	55	54	54	54	56	48	38
	- 1250	54	49	47	46	46	43	32	27
	+ 1250	57	47	40	39	41	39	28	26
	+ 2000	60	55	50	48	49	52	45	33

GN correction chart at right must be used to correct GN to other face areas. →

Face Area (sq.ft.)	2.5	5	10	20	40	80
dB	-3	0	+3	+6	+9	+12

CERTIFIED PERFORMANCE DATA

VIBRO-ACOUSTICS®
A Swegon Group company

RMB-HV-F2

Rectangular MoldBlock
High velocity silencer
(<2000 fpm)

How to Specify Example:

27 X **22** **RMB-HV-F2** X **60**

Duct Width | Duct Height | Silencer Model | Silencer Length

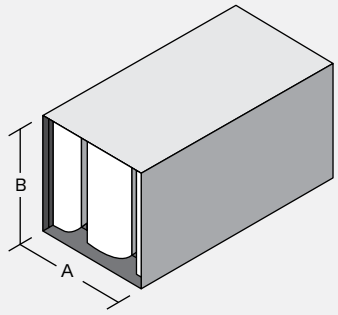

Insertion Loss (IL)

+ : "forward flow" where noise & airflow move in same direction (e.g. supply side)

- : "reverse flow" where noise & airflow move in opposite directions (e.g. return side)

See Silencer Selection Instructions. DIL above 50dB may be limited due to noise flanking around the silencer or along the duct walls. If more than 50dB DIL is required, contact your local Vibro-Acoustics Representative or call **1-800-565-8401**.

Length (in.)	Face Velocity (ft. per min)	Octave Band - Hz/Dynamic Insertion Loss (dB)							
		63	125	250	500	1000	2000	4000	8000
36	- 2000	4	7	11	13	14	12	11	8
	+ 2000	2	5	9	12	13	11	10	7
60	- 2000	5	10	16	22	20	16	13	10
	+ 2000	3	7	14	19	19	15	13	10
84	- 2000	7	15	22	29	27	20	15	11
	+ 2000	5	10	19	26	27	20	15	12
108	- 2000	8	19	28	36	33	23	16	13
	+ 2000	6	13	25	32	34	23	17	14

Pressure Drop (PD)

Pressure drops are reported in accordance with ASTM E477 methods and are based upon **ideal** flow conditions (5 diameters of straight duct on silencer inlet and 10 on outlet). Less than ideal conditions will result in an increase in pressure drop due to System Effects. See Silencer System Effects Data.

Length (in.)	Face Velocity (ft. per min) / Pressure Drop (in.w.g.)						
	500	1000	1500	1750	2000	2250	2500
36	0.01	0.04	0.09	0.12	0.16	0.20	0.25
60	0.01	0.05	0.12	0.16	0.21	0.27	0.33
84	0.02	0.07	0.16	0.21	0.28	0.35	0.44
108	0.02	0.08	0.18	0.24	0.32	0.41	0.50

☐ Acceptable (0 - 0.35") ☐ Caution (>0.35") Pressure Drop may be too high for certain applications

Cross Section Sizes*

"A" dimension (in.)
13.5–14.5
27–29
54–58
81–87
108–116
135–145
162–174
189–203
216–232

"B" dimension
ANY SIZE

See Rectangular Silencer Cross-Section Dimensions to ensure selection matches ductwork dimensions.

Generated Noise (GN)

@ 5 sq.ft. face area

Length (in.)	Face Velocity (ft. per min)	Octave Band - Hz/Generated Noise (dB re 10^{-12} watts)							
		63	125	250	500	1K	2K	4K	8K
All	- 2000	57	56	54	54	55	56	49	38
	- 1250	53	49	47	46	47	44	32	27
	+ 1250	56	48	41	39	41	40	28	26
	+ 2000	59	56	50	49	49	52	46	34

GN correction chart at right must be used to correct GN to other face areas. →

Face Area (sq.ft.)	2.5	5	10	20	40	80
dB	-3	0	+3	+6	+9	+12

CERTIFIED PERFORMANCE DATA

VIBRO-ACOUSTICS®
A Swegon Group company

RMB-HV-F3

Rectangular MoldBlock
High velocity silencer
(<2000 fpm)

How to Specify Example:

25 X **21** **RMB-HV-F3** X **60**

Duct Width	Duct Height	Silencer Model	Silencer Length

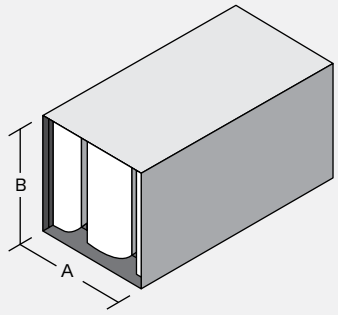

Insertion Loss (IL)

+ : "forward flow" where noise & airflow move in same direction (e.g. supply side)

- : "reverse flow" where noise & airflow move in opposite directions (e.g. return side)

See Silencer Selection Instructions. DIL above 50dB may be limited due to noise flanking around the silencer or along the duct walls. If more than 50dB DIL is required, contact your local Vibro-Acoustics Representative or call **1-800-565-8401**.

Length (in.)	Face Velocity (ft. per min)	Octave Band - Hz/Dynamic Insertion Loss (dB)							
		63	125	250	500	1000	2000	4000	8000
36	- 2000	4	6	10	14	14	12	10	7
	+ 2000	3	5	8	13	14	11	9	6
60	- 2000	4	9	15	24	20	15	12	9
	+ 2000	3	6	13	22	20	16	12	9
84	- 2000	7	15	22	32	30	20	14	10
	+ 2000	6	10	19	28	29	22	15	11
108	- 2000	7	18	27	40	36	23	16	12
	+ 2000	5	13	24	36	37	25	16	13

Pressure Drop (PD)

Pressure drops are reported in accordance with ASTM E477 methods and are based upon **ideal** flow conditions (5 diameters of straight duct on silencer inlet and 10 on outlet). Less than ideal conditions will result in an increase in pressure drop due to System Effects. See Silencer System Effects Data.

Length (in.)	Face Velocity (ft. per min) / Pressure Drop (in.w.g.)						
	500	1000	1500	1750	2000	2250	2500
36	0.01	0.04	0.09	0.12	0.16	0.20	0.25
60	0.01	0.05	0.12	0.16	0.21	0.26	0.32
84	0.02	0.07	0.16	0.21	0.28	0.35	0.44
108	0.02	0.08	0.17	0.23	0.30	0.38	0.47

☐ Acceptable (0 - 0.35") ☐ Caution (>0.35") Pressure Drop may be too high for certain applications

Generated Noise (GN)

@ 5 sq.ft. face area

Length (in.)	Face Velocity (ft. per min)	Octave Band - Hz/Generated Noise (dB re 10^{-12} watts)							
		63	125	250	500	1K	2K	4K	8K
All	- 2000	56	56	55	54	55	56	49	38
	- 1250	53	49	47	47	47	44	32	26
	+ 1250	56	48	41	39	41	40	29	26
	+ 2000	59	57	51	49	49	53	47	36

GN correction chart at right must be used to correct GN to other face areas. →

Face Area (sq.ft.)	2.5	5	10	20	40	80
dB	-3	0	+3	+6	+9	+12

Cross Section Sizes*

"A" dimension (in.)
12.5–13.5
25–27
50–54
75–81
100–108
125–135
150–162
175–189
200–216
225–243

"B" dimension
ANY SIZE

See Rectangular Silencer Cross-Section Dimensions to ensure selection matches ductwork dimensions.

CERTIFIED PERFORMANCE DATA

VIBRO-ACOUSTICS®
A Swegon Group company

RMB-HV-F4

Rectangular MoldBlock
High velocity silencer
(<2000 fpm)

How to Specify Example:

47 X **22** **RMB-HV-F4** X **60**

Duct Width	Duct Height	Silencer Model	Silencer Length

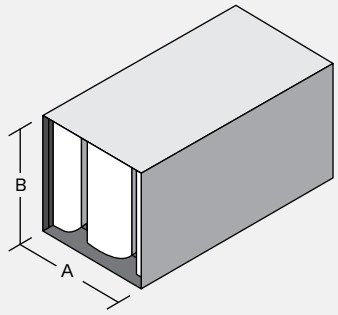

Insertion Loss (IL)

+ : "forward flow" where noise & airflow move in same direction (e.g. supply side)

- : "reverse flow" where noise & airflow move in opposite directions (e.g. return side)

See Silencer Selection Instructions. DIL above 50dB may be limited due to noise flanking around the silencer or along the duct walls. If more than 50dB DIL is required, contact your local Vibro-Acoustics Representative or call **1-800-565-8401**.

Length (in.)	Face Velocity (ft. per min)	Octave Band - Hz/Dynamic Insertion Loss (dB)							
		63	125	250	500	1000	2000	4000	8000
36	- 2000	4	6	10	16	14	11	8	5
	+ 2000	3	5	8	14	14	11	8	5
60	- 2000	4	8	15	27	21	15	11	7
	+ 2000	3	6	12	25	21	17	12	8
84	- 2000	7	15	21	35	32	21	14	9
	+ 2000	6	10	18	31	32	23	15	10
108	- 2000	6	18	27	43	39	24	15	10
	+ 2000	4	13	24	39	40	26	15	12

Pressure Drop (PD)

Pressure drops are reported in accordance with ASTM E477 methods and are based upon **ideal** flow conditions (5 diameters of straight duct on silencer inlet and 10 on outlet). Less than ideal conditions will result in an increase in pressure drop due to System Effects. See Silencer System Effects Data.

Length (in.)	Face Velocity (ft. per min) / Pressure Drop (in.w.g.)						
	500	1000	1500	1750	2000	2250	2500
36	0.01	0.04	0.09	0.12	0.16	0.20	0.25
60	0.01	0.05	0.11	0.15	0.20	0.25	0.31
84	0.02	0.07	0.16	0.21	0.28	0.35	0.44
108	0.02	0.07	0.16	0.21	0.28	0.35	0.44

☐ Acceptable (0 - 0.35") ☐ Caution (>0.35") Pressure Drop may be too high for certain applications

Generated Noise (GN)

@ 5 sq.ft. face area

Length (in.)	Face Velocity (ft. per min)	Octave Band - Hz/Generated Noise (dB re 10^{-12} watts)							
		63	125	250	500	1K	2K	4K	8K
All	- 2000	56	56	55	55	55	57	49	38
	- 1250	53	50	47	47	47	44	32	26
	+ 1250	55	49	42	39	41	40	29	26
	+ 2000	59	58	52	49	49	53	47	37

GN correction chart at right must be used to correct GN to other face areas. →

Face Area (sq.ft.)	2.5	5	10	20	40	80
dB	-3	0	+3	+6	+9	+12

Cross Section Sizes*

"A" dimension (in.)
11.5–12.5
23–25
46–50
69–75
92–100
115–125
138–150
161–175
207–225

"B" dimension
ANY SIZE

See Rectangular Silencer Cross-Section Dimensions to ensure selection matches ductwork dimensions.

CERTIFIED PERFORMANCE DATA

VIBRO-ACOUSTICS®
A Swegon Group company

RMB-HV-F5

Rectangular MoldBlock
High velocity silencer
(<2000 fpm)

How to Specify Example:

44 X **22** **RMB-HV-F5** X **60**

Duct Width | Duct Height | Silencer Model | Silencer Length

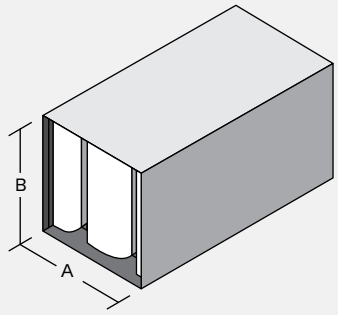

Insertion Loss (IL)

+ : "forward flow" where noise & airflow move in same direction (e.g. supply side)

- : "reverse flow" where noise & airflow move in opposite directions (e.g. return side)

See Silencer Selection Instructions. DIL above 50dB may be limited due to noise flanking around the silencer or along the duct walls. If more than 50dB DIL is required, contact your local Vibro-Acoustics Representative or call **1-800-565-8401**.

Length (in.)	Face Velocity (ft. per min)	Octave Band - Hz/Dynamic Insertion Loss (dB)							
		63	125	250	500	1000	2000	4000	8000
36	- 2000	4	6	10	15	17	12	9	6
	+ 2000	3	5	8	14	16	13	9	6
60	- 2000	4	8	14	26	24	17	12	8
	+ 2000	3	6	11	23	24	19	13	9
84	- 2000	7	15	21	35	36	26	16	10
	+ 2000	6	10	18	31	36	28	18	11
108	- 2000	6	17	26	42	42	29	17	11
	+ 2000	4	13	22	38	43	31	18	13

Pressure Drop (PD)

Pressure drops are reported in accordance with ASTM E477 methods and are based upon **ideal** flow conditions (5 diameters of straight duct on silencer inlet and 10 on outlet). Less than ideal conditions will result in an increase in pressure drop due to System Effects. See Silencer System Effects Data.

Length (in.)	Face Velocity (ft. per min) / Pressure Drop (in.w.g.)						
	500	1000	1500	1750	2000	2250	2500
36	0.01	0.04	0.09	0.12	0.16	0.20	0.25
60	0.01	0.05	0.12	0.16	0.21	0.26	0.32
84	0.02	0.08	0.17	0.23	0.31	0.39	0.48
108	0.02	0.07	0.16	0.22	0.29	0.37	0.46

☐ Acceptable (0 - 0.35") ☐ Caution (>0.35") Pressure Drop may be too high for certain applications

Generated Noise (GN)

@ 5 sq.ft. face area

Length (in.)	Face Velocity (ft. per min)	Octave Band - Hz/Generated Noise (dB re 10^{-12} watts)							
		63	125	250	500	1K	2K	4K	8K
All	- 2000	56	56	55	55	55	57	50	38
	- 1250	53	50	47	47	48	45	32	26
	+ 1250	55	49	42	39	41	40	29	26
	+ 2000	59	58	52	49	49	53	47	37

GN correction chart at right must be used to correct GN to other face areas. →

Face Area (sq.ft.)	2.5	5	10	20	40	80
dB	-3	0	+3	+6	+9	+12

Cross Section Sizes*

"A" dimension (in.)
10.5–11.5
21–23
42–46
63–69
84–92
105–115
126–138
147–161
168–184
189–207

"B" dimension
ANY SIZE

See Rectangular Silencer Cross-Section Dimensions to ensure selection matches ductwork dimensions.

CERTIFIED PERFORMANCE DATA

VIBRO-ACOUSTICS®
A Swegon Group company

RMB-HV-F6

Rectangular MoldBlock
High velocity silencer
(<2000 fpm)

How to Specify Example:

40 X **21** **RMB-HV-F6** X **60**

Duct Width | Duct Height | Silencer Model | Silencer Length

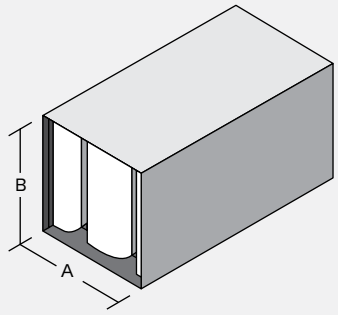

Insertion Loss (IL)

+ : "forward flow" where noise & airflow move in same direction (e.g. supply side)

- : "reverse flow" where noise & airflow move in opposite directions (e.g. return side)

See Silencer Selection Instructions. DIL above 50dB may be limited due to noise flanking around the silencer or along the duct walls. If more than 50dB DIL is required, contact your local Vibro-Acoustics Representative or call **1-800-565-8401**.

Length (in.)	Face Velocity (ft. per min)	Octave Band - Hz/Dynamic Insertion Loss (dB)							
		63	125	250	500	1000	2000	4000	8000
36	- 2000	4	6	9	15	19	14	10	6
	+ 2000	3	4	7	13	18	14	10	6
60	- 2000	4	8	13	25	28	20	13	8
	+ 2000	3	5	11	22	27	21	15	10
84	- 2000	7	14	21	36	40	30	18	11
	+ 2000	6	10	17	31	41	33	21	13
108	- 2000	6	17	25	41	45	33	19	12
	+ 2000	4	13	21	37	47	36	21	15

Pressure Drop (PD)

Pressure drops are reported in accordance with ASTM E477 methods and are based upon **ideal** flow conditions (5 diameters of straight duct on silencer inlet and 10 on outlet). Less than ideal conditions will result in an increase in pressure drop due to System Effects. See Silencer System Effects Data.

Length (in.)	Face Velocity (ft. per min) / Pressure Drop (in.w.g.)						
	500	1000	1500	1750	2000	2250	2500
36	0.01	0.04	0.09	0.12	0.16	0.20	0.25
60	0.01	0.05	0.12	0.16	0.21	0.27	0.33
84	0.02	0.08	0.19	0.26	0.33	0.42	0.52
108	0.02	0.08	0.17	0.23	0.31	0.39	0.48

☐ Acceptable (0 - 0.35") ☐ Caution (>0.35") Pressure Drop may be too high for certain applications

Generated Noise (GN)

@ 5 sq.ft. face area

Length (in.)	Face Velocity (ft. per min)	Octave Band - Hz/Generated Noise (dB re 10^{-12} watts)							
		63	125	250	500	1K	2K	4K	8K
All	- 2000	56	56	55	54	55	57	50	38
	- 1250	53	50	47	47	48	46	33	26
	+ 1250	55	49	42	39	41	40	29	26
	+ 2000	59	58	52	48	48	52	47	37

GN correction chart at right must be used to correct GN to other face areas. →

Face Area (sq.ft.)	2.5	5	10	20	40	80
dB	-3	0	+3	+6	+9	+12

Cross Section Sizes*

"A" dimension (in.)
9.5–10.5
19–21
38–42
57–63
76–84
95–105
114–126
133–147
152–168
171–189

"B" dimension
ANY SIZE

See Rectangular Silencer Cross-Section Dimensions to ensure selection matches ductwork dimensions.

CERTIFIED PERFORMANCE DATA

VIBRO-ACOUSTICS®
A Swegon Group company

RMB-HV-F7

Rectangular MoldBlock
High velocity silencer
(<2000 fpm)

How to Specify Example:

37 X **21** **RMB-HV-F7** X **60**

Duct Width	Duct Height	Silencer Model	Silencer Length

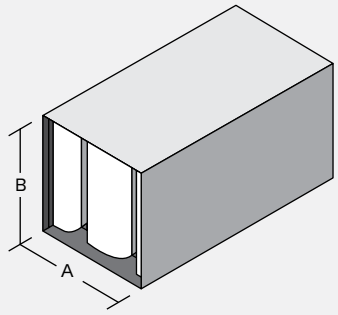

Insertion Loss (IL)

+ : "forward flow" where noise & airflow move in same direction (e.g. supply side)

- : "reverse flow" where noise & airflow move in opposite directions (e.g. return side)

See Silencer Selection Instructions. DIL above 50dB may be limited due to noise flanking around the silencer or along the duct walls. If more than 50dB DIL is required, contact your local Vibro-Acoustics Representative or call **1-800-565-8401**.

Length (in.)	Face Velocity (ft. per min)	Octave Band - Hz/Dynamic Insertion Loss (dB)							
		63	125	250	500	1000	2000	4000	8000
36	- 2000	4	5	11	18	20	15	10	7
	+ 2000	3	4	9	16	19	15	11	7
60	- 2000	4	7	16	29	30	21	13	9
	+ 2000	3	5	13	26	29	23	16	11
84	- 2000	7	13	27	43	42	33	20	12
	+ 2000	6	8	21	38	43	36	23	15
108	- 2000	6	15	30	49	46	35	21	13
	+ 2000	4	11	25	44	48	39	24	16

Pressure Drop (PD)

Pressure drops are reported in accordance with ASTM E477 methods and are based upon **ideal** flow conditions (5 diameters of straight duct on silencer inlet and 10 on outlet). Less than ideal conditions will result in an increase in pressure drop due to System Effects. See Silencer System Effects Data.

Length (in.)	Face Velocity (ft. per min) / Pressure Drop (in.w.g.)						
	500	1000	1500	1750	2000	2250	2500
36	0.01	0.04	0.09	0.12	0.16	0.20	0.25
60	0.01	0.05	0.12	0.17	0.22	0.28	0.34
84	0.02	0.09	0.20	0.28	0.36	0.46	0.56
108	0.02	0.08	0.18	0.24	0.32	0.40	0.50

☐ Acceptable (0 - 0.35") ☐ Caution (>0.35") Pressure Drop may be too high for certain applications

Generated Noise (GN)

@ 5 sq.ft. face area

Length (in.)	Face Velocity (ft. per min)	Octave Band - Hz/Generated Noise (dB re 10^{-12} watts)							
		63	125	250	500	1K	2K	4K	8K
All	- 2000	56	56	55	54	54	58	50	38
	- 1250	53	50	47	47	49	47	34	26
	+ 1250	55	49	42	39	40	40	29	26
	+ 2000	59	58	52	48	48	52	47	37

GN correction chart at right must be used to correct GN to other face areas. →

Face Area (sq.ft.)	2.5	5	10	20	40	80
dB	-3	0	+3	+6	+9	+12

Cross Section Sizes*

"A" dimension (in.)
8.25–9.5
16.5–19
33–38
49.5–57
66–76
82.5–95
99–114
115.5–133
132–152
148.5–171

"B" dimension
ANY SIZE

See Rectangular Silencer Cross-Section Dimensions to ensure selection matches ductwork dimensions.

CERTIFIED PERFORMANCE DATA

VIBRO-ACOUSTICS®
A Swegon Group company

RMB-HV-F8

Rectangular MoldBlock
High velocity silencer
(<2000 fpm)

How to Specify Example:

14 X **22** **RMB-HV-F8** X **60**

Duct Width	Duct Height	Silencer Model	Silencer Length

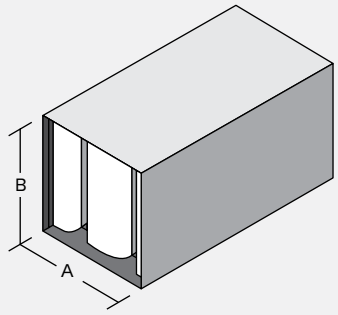

Insertion Loss (IL)

+ : "forward flow" where noise & airflow move in same direction (e.g. supply side)

- : "reverse flow" where noise & airflow move in opposite directions (e.g. return side)

See Silencer Selection Instructions. DIL above 50dB may be limited due to noise flanking around the silencer or along the duct walls. If more than 50dB DIL is required, contact your local Vibro-Acoustics Representative or call **1-800-565-8401**.

Length (in.)	Face Velocity (ft. per min)	Octave Band - Hz/Dynamic Insertion Loss (dB)							
		63	125	250	500	1000	2000	4000	8000
36	- 2000	3	5	9	16	20	16	14	12
	+ 2000	2	3	7	14	19	16	14	11
60	- 2000	6	7	16	28	33	23	17	14
	+ 2000	4	5	13	24	32	24	18	14
84	- 2000	8	10	23	39	46	30	20	16
	+ 2000	6	7	18	35	44	33	23	18
108	- 2000	11	13	29	50	55	37	23	18
	+ 2000	8	9	24	45	55	42	27	21

Pressure Drop (PD)

Pressure drops are reported in accordance with ASTM E477 methods and are based upon **ideal** flow conditions (5 diameters of straight duct on silencer inlet and 10 on outlet). Less than ideal conditions will result in an increase in pressure drop due to System Effects. See Silencer System Effects Data.

Length (in.)	Face Velocity (ft. per min) / Pressure Drop (in.w.g.)						
	500	1000	1500	1750	2000	2250	2500
36	0.01	0.05	0.10	0.14	0.18	0.23	0.28
60	0.02	0.07	0.15	0.21	0.27	0.34	0.42
84	0.02	0.09	0.20	0.28	0.36	0.46	0.56
108	0.03	0.11	0.25	0.34	0.45	0.57	0.70

☐ Acceptable (0 - 0.35") ☐ Caution (>0.35") Pressure Drop may be too high for certain applications

Generated Noise (GN)

@ 5 sq.ft. face area

Length (in.)	Face Velocity (ft. per min)	Octave Band - Hz/Generated Noise (dB re 10^{-12} watts)							
		63	125	250	500	1K	2K	4K	8K
All	- 2000	58	55	54	54	55	57	49	39
	- 1250	54	48	47	48	48	46	34	27
	+ 1250	56	48	40	39	40	38	28	26
	+ 2000	60	56	51	47	48	50	44	32

GN correction chart at right must be used to correct GN to other face areas. →

Face Area (sq.ft.)	2.5	5	10	20	40	80
dB	-3	0	+3	+6	+9	+12

Cross Section Sizes*

"A" dimension (in.)
6.75–8.25
13.5–16.5
27–33
40.5–49.5
54–66
67.5–82.5
81–99
94.5–115.5
108–132
121.5–148.5

"B" dimension
ANY SIZE

See Rectangular Silencer Cross-Section Dimensions to ensure selection matches ductwork dimensions.

CERTIFIED PERFORMANCE DATA

VIBRO-ACOUSTICS®
A Swegon Group company

RMB-HV-F9

Rectangular MoldBlock
High velocity silencer
(<2000 fpm)

How to Specify Example:

21 X **21** **RMB-HV-F9** X **60**

Duct Width	Duct Height	Silencer Model	Silencer Length

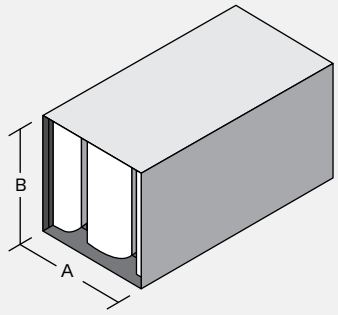

Insertion Loss (IL)

+ : "forward flow" where noise & airflow move in same direction (e.g. supply side)

- : "reverse flow" where noise & airflow move in opposite directions (e.g. return side)

See Silencer Selection Instructions. DIL above 50dB may be limited due to noise flanking around the silencer or along the duct walls. If more than 50dB DIL is required, contact your local Vibro-Acoustics Representative or call **1-800-565-8401**.

Length (in.)	Face Velocity (ft. per min)	Octave Band - Hz/Dynamic Insertion Loss (dB)							
		63	125	250	500	1000	2000	4000	8000
36	- 2000	4	4	9	17	27	19	13	8
	+ 2000	3	3	7	14	25	19	14	8
60	- 2000	4	6	14	25	40	28	16	11
	+ 2000	4	5	10	22	38	29	19	13
84	- 2000	7	12	28	44	53	45	27	16
	+ 2000	6	8	19	39	55	49	32	20
108	- 2000	7	13	27	46	54	47	27	16
	+ 2000	4	10	19	41	55	52	32	21

Pressure Drop (PD)

Pressure drops are reported in accordance with ASTM E477 methods and are based upon **ideal** flow conditions (5 diameters of straight duct on silencer inlet and 10 on outlet). Less than ideal conditions will result in an increase in pressure drop due to System Effects. See Silencer System Effects Data.

Length (in.)	Face Velocity (ft. per min) / Pressure Drop (in.w.g.)						
	500	1000	1500	1750	2000	2250	2500
36	0.01	0.04	0.09	0.12	0.16	0.20	0.25
60	0.02	0.06	0.13	0.18	0.24	0.30	0.37
84	0.03	0.11	0.25	0.34	0.44	0.56	0.69
108	0.02	0.09	0.20	0.28	0.36	0.46	0.56

☐ Acceptable (0 - 0.35") ☐ Caution (>0.35") Pressure Drop may be too high for certain applications

Generated Noise (GN)

@ 5 sq.ft. face area

Length (in.)	Face Velocity (ft. per min)	Octave Band - Hz/Generated Noise (dB re 10^{-12} watts)							
		63	125	250	500	1K	2K	4K	8K
All	- 2000	56	55	54	53	54	58	51	39
	- 1250	53	50	46	47	51	49	36	27
	+ 1250	56	49	41	38	39	40	30	26
	+ 2000	58	57	52	47	47	51	46	36

GN correction chart at right must be used to correct GN to other face areas. →

Face Area (sq.ft.)	2.5	5	10	20	40	80
dB	-3	0	+3	+6	+9	+12

Cross Section Sizes*

"A" dimension (in.)
5–6.75
10–13.5
20–27
30–40.5
40–54
50–67.5
60–81
70–94.5
80–108
90–121.5

"B" dimension
ANY SIZE

See Rectangular Silencer Cross-Section Dimensions to ensure selection matches ductwork dimensions.

CERTIFIED PERFORMANCE DATA

VIBRO-ACOUSTICS®
A Swegon Group company

RFMB-ULV-F1

Rectangular Film MoldBlock
Ultra low velocity silencer
(<500 fpm)

How to Specify Example:

32 X **21** **RFMB-ULV-F1** X **60**

Duct Width	Duct Height	Silencer Model	Silencer Length

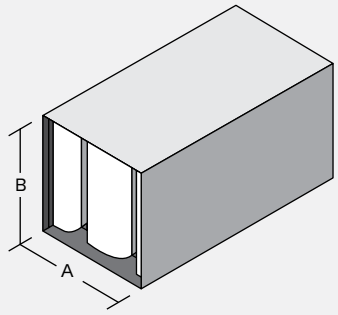

Insertion Loss (IL)

+ : "forward flow" where noise & airflow move in same direction (e.g. supply side)

- : "reverse flow" where noise & airflow move in opposite directions (e.g. return side)

See Silencer Selection Instructions. DIL above 50dB may be limited due to noise flanking around the silencer or along the duct walls. If more than 50dB DIL is required, contact your local Vibro-Acoustics Representative or call **1-800-565-8401**.

Length (in.)	Face Velocity (ft. per min)	Octave Band - Hz/Dynamic Insertion Loss (dB)							
		63	125	250	500	1000	2000	4000	8000
36	- 500	10	14	15	14	22	25	19	12
	+ 500	9	13	14	13	21	29	21	13
60	- 500	12	16	23	24	31	33	23	12
	+ 500	11	15	22	23	30	35	27	15
84	- 500	14	17	31	34	40	41	28	13
	+ 500	12	16	30	32	40	41	33	16
108	- 500	17	20	39	39	46	51	32	15
	+ 500	14	19	37	39	46	50	39	19

Pressure Drop (PD)

Pressure drops are reported in accordance with ASTM E477 methods and are based upon **ideal** flow conditions (5 diameters of straight duct on silencer inlet and 10 on outlet). Less than ideal conditions will result in an increase in pressure drop due to System Effects. See Silencer System Effects Data.

Length (in.)	Face Velocity (ft. per min) / Pressure Drop (in.w.g.)						
	250	500	750	1000	1250	1500	1750
36	0.03	0.12	0.26	0.46	0.72	1.04	1.41
60	0.04	0.16	0.35	0.63	0.98	1.41	1.92
84	0.05	0.20	0.45	0.80	1.24	1.79	2.43
108	0.06	0.24	0.54	0.96	1.50	2.17	2.95

☐ Acceptable (0 - 0.35") ☐ Caution (>0.35") Pressure Drop may be too high for certain applications

Generated Noise (GN)

@ 5 sq.ft. face area

Length (in.)	Face Velocity (ft. per min)	Octave Band - Hz/Generated Noise (dB re 10^{-12} watts)							
		63	125	250	500	1K	2K	4K	8K
All	- 750	60	41	39	40	46	52	43	36
	- 500	56	43	34	36	40	39	29	34
	+ 500	62	41	38	36	34	27	26	34
	+ 750	59	46	44	44	43	40	36	35

GN correction chart at right must be used to correct GN to other face areas. →

Face Area (sq.ft.)	2.5	5	10	20	40	80
dB	-3	0	+3	+6	+9	+12

Cross Section Sizes*

"A" dimension (in.)
14.5-15.5
29-31
58-62
116-124
145-155
174-186
203-217
232-248

"B" dimension
ANY SIZE

See Rectangular Silencer Cross-Section Dimensions to ensure selection matches ductwork dimensions.

CERTIFIED PERFORMANCE DATA

VIBRO-ACOUSTICS®
A Swegon Group company

RFMB-ULV-F2

Rectangular Film MoldBlock
Ultra low velocity silencer
(<500 fpm)

How to Specify Example:

27 X **22** **RFMB-ULV-F2** X **60**

Duct Width	Duct Height	Silencer Model	Silencer Length

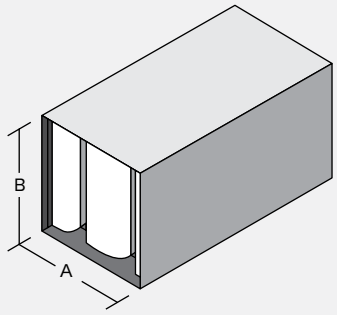

Insertion Loss (IL)

+ : "forward flow" where noise & airflow move in same direction (e.g. supply side)

- : "reverse flow" where noise & airflow move in opposite directions (e.g. return side)

See Silencer Selection Instructions. DIL above 50dB may be limited due to noise flanking around the silencer or along the duct walls. If more than 50dB DIL is required, contact your local Vibro-Acoustics Representative or call **1-800-565-8401**.

Length (in.)	Face Velocity (ft. per min)	Octave Band - Hz/Dynamic Insertion Loss (dB)							
		63	125	250	500	1000	2000	4000	8000
36	- 500	10	13	15	15	23	27	18	11
	+ 500	10	12	14	14	22	29	20	12
60	- 500	12	15	23	25	32	35	23	12
	+ 500	11	14	21	24	32	38	26	14
84	- 500	14	17	30	36	42	44	28	12
	+ 500	12	16	29	34	42	47	33	16
108	- 500	16	20	37	39	46	55	33	14
	+ 500	14	18	36	39	46	55	40	19

Pressure Drop (PD)

Pressure drops are reported in accordance with ASTM E477 methods and are based upon **ideal** flow conditions (5 diameters of straight duct on silencer inlet and 10 on outlet). Less than ideal conditions will result in an increase in pressure drop due to System Effects. See Silencer System Effects Data.

Length (in.)	Face Velocity (ft. per min) / Pressure Drop (in.w.g.)						
	250	500	750	1000	1250	1500	1750
36	0.03	0.11	0.26	0.45	0.71	1.02	1.39
60	0.04	0.15	0.34	0.61	0.95	1.37	1.86
84	0.05	0.19	0.44	0.78	1.22	1.76	2.39
108	0.06	0.22	0.50	0.90	1.40	2.01	2.74

☐ Acceptable (0 - 0.35") ☐ Caution (>0.35") Pressure Drop may be too high for certain applications

Generated Noise (GN)

@ 5 sq.ft. face area

Length (in.)	Face Velocity (ft. per min)	Octave Band - Hz/Generated Noise (dB re 10^{-12} watts)							
		63	125	250	500	1K	2K	4K	8K
All	- 750	59	43	41	42	47	52	43	36
	- 500	56	43	36	37	42	40	30	33
	+ 500	61	41	39	37	35	28	26	33
	+ 750	59	47	45	45	43	41	36	34

GN correction chart at right must be used to correct GN to other face areas. →

Face Area (sq.ft.)	2.5	5	10	20	40	80
dB	-3	0	+3	+6	+9	+12

Cross Section Sizes*

"A" dimension (in.)
13.5-14.5
27-29
54-58
81-87
108-116
135-145
162-174
189-203
216-232

"B" dimension
ANY SIZE

See Rectangular Silencer Cross-Section Dimensions to ensure selection matches ductwork dimensions.

CERTIFIED PERFORMANCE DATA

VIBRO-ACOUSTICS®
A Swegon Group company

RFMB-ULV-F3

Rectangular Film MoldBlock
Ultra low velocity silencer
(<500 fpm)

How to Specify Example:

25 X **21** **RFMB-ULV-F3** X **60**

Duct Width	Duct Height	Silencer Model	Silencer Length

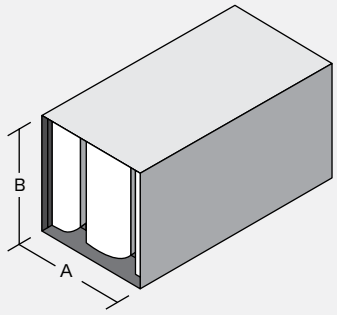

Insertion Loss (IL)

+ : "forward flow" where noise & airflow move in same direction (e.g. supply side)

- : "reverse flow" where noise & airflow move in opposite directions (e.g. return side)

See Silencer Selection Instructions. DIL above 50dB may be limited due to noise flanking around the silencer or along the duct walls. If more than 50dB DIL is required, contact your local Vibro-Acoustics Representative or call **1-800-565-8401**.

Length (in.)	Face Velocity (ft. per min)	Octave Band - Hz/Dynamic Insertion Loss (dB)							
		63	125	250	500	1000	2000	4000	8000
36	- 500	10	12	15	16	23	28	17	10
	+ 500	10	11	14	15	23	30	19	11
60	- 500	12	14	22	27	34	38	22	11
	+ 500	11	14	21	26	34	41	26	13
84	- 500	14	17	30	37	44	48	28	11
	+ 500	12	16	28	37	44	52	34	15
108	- 500	16	19	36	39	46	55	34	14
	+ 500	14	18	34	39	46	55	40	18

Pressure Drop (PD)

Pressure drops are reported in accordance with ASTM E477 methods and are based upon **ideal** flow conditions (5 diameters of straight duct on silencer inlet and 10 on outlet). Less than ideal conditions will result in an increase in pressure drop due to System Effects. See Silencer System Effects Data.

Length (in.)	Face Velocity (ft. per min) / Pressure Drop (in.w.g.)						
	250	500	750	1000	1250	1500	1750
36	0.03	0.11	0.25	0.45	0.70	1.01	1.37
60	0.04	0.15	0.33	0.59	0.92	1.33	1.80
84	0.05	0.19	0.43	0.76	1.20	1.72	2.34
108	0.05	0.21	0.47	0.83	1.29	1.86	2.53

☐ Acceptable (0 - 0.35") ☐ Caution (>0.35") Pressure Drop may be too high for certain applications

Generated Noise (GN)

@ 5 sq.ft. face area

Length (in.)	Face Velocity (ft. per min)	Octave Band - Hz/Generated Noise (dB re 10^{-12} watts)							
		63	125	250	500	1K	2K	4K	8K
All	- 750	58	44	43	43	48	52	43	35
	- 500	55	44	39	39	43	42	30	33
	+ 500	59	41	40	37	35	28	26	32
	+ 750	59	48	46	45	43	41	37	34

GN correction chart at right must be used to correct GN to other face areas. →

Face Area (sq.ft.)	2.5	5	10	20	40	80
dB	-3	0	+3	+6	+9	+12

Cross Section Sizes*

"A" dimension (in.)
12.5-13.5
25-27
50-54
75-81
100-108
125-135
150-162
175-189
200-216
225-243

"B" dimension
ANY SIZE

See Rectangular Silencer Cross-Section Dimensions to ensure selection matches ductwork dimensions.

CERTIFIED PERFORMANCE DATA

VIBRO-ACOUSTICS®
A Swegon Group company

RFMB-ULV-F4

Rectangular Film MoldBlock
Ultra low velocity silencer
(<500 fpm)

How to Specify Example:

47 X **22** **RFMB-ULV-F4** X **60**

Duct Width	Duct Height	Silencer Model	Silencer Length

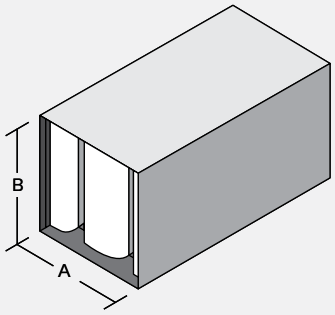

Insertion Loss (IL)

+ : "forward flow" where noise & airflow move in same direction (e.g. supply side)

- : "reverse flow" where noise & airflow move in opposite directions (e.g. return side)

See Silencer Selection Instructions. DIL above 50dB may be limited due to noise flanking around the silencer or along the duct walls. If more than 50dB DIL is required, contact your local Vibro-Acoustics Representative or call **1-800-565-8401**.

Length (in.)	Face Velocity (ft. per min)	Octave Band - Hz/Dynamic Insertion Loss (dB)							
		63	125	250	500	1000	2000	4000	8000
36	- 500	10	11	14	18	24	30	16	9
	+ 500	10	11	13	17	24	31	18	10
60	- 500	12	14	22	28	35	40	22	10
	+ 500	11	13	21	28	35	44	26	12
84	- 500	14	17	29	39	46	51	28	11
	+ 500	13	15	28	39	46	55	34	14
108	- 500	15	19	35	39	46	55	35	13
	+ 500	13	17	33	39	46	55	41	17

Pressure Drop (PD)

Pressure drops are reported in accordance with ASTM E477 methods and are based upon **ideal** flow conditions (5 diameters of straight duct on silencer inlet and 10 on outlet). Less than ideal conditions will result in an increase in pressure drop due to System Effects. See Silencer System Effects Data.

Length (in.)	Face Velocity (ft. per min) / Pressure Drop (in.w.g.)						
	250	500	750	1000	1250	1500	1750
36	0.03	0.11	0.25	0.44	0.69	0.99	1.35
60	0.04	0.14	0.32	0.57	0.89	1.28	1.75
84	0.05	0.19	0.42	0.75	1.17	1.69	2.30
108	0.05	0.19	0.43	0.76	1.19	1.71	2.33

☐ Acceptable (0 - 0.35") ☐ Caution (>0.35") Pressure Drop may be too high for certain applications

Generated Noise (GN)

@ 5 sq.ft. face area

Length (in.)	Face Velocity (ft. per min)	Octave Band - Hz/Generated Noise (dB re 10^{-12} watts)							
		63	125	250	500	1K	2K	4K	8K
All	- 750	57	45	45	45	48	53	44	35
	- 500	55	44	41	40	44	43	31	32
	+ 500	58	41	41	38	36	29	25	31
	+ 750	59	49	46	46	44	42	37	33

GN correction chart at right must be used to correct GN to other face areas. →

Face Area (sq.ft.)	2.5	5	10	20	40	80
dB	-3	0	+3	+6	+9	+12

Cross Section Sizes*

"A" dimension (in.)
11.5-12.5
23-25
46-50
69-100
115-125
138-150
161-175
207-225

"B" dimension
ANY SIZE

See Rectangular Silencer Cross-Section Dimensions to ensure selection matches ductwork dimensions.

CERTIFIED PERFORMANCE DATA

VIBRO-ACOUSTICS®
A Swegon Group company

RFMB-ULV-F5

Rectangular Film MoldBlock
Ultra low velocity silencer
(<500 fpm)

How to Specify Example:

44 X **22** **RFMB-ULV-F5** X **60**

Duct Width	Duct Height	Silencer Model	Silencer Length

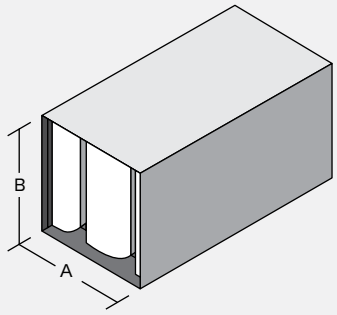

Insertion Loss (IL)

+ : "forward flow" where noise & airflow move in same direction (e.g. supply side)

- : "reverse flow" where noise & airflow move in opposite directions (e.g. return side)

See Silencer Selection Instructions. DIL above 50dB may be limited due to noise flanking around the silencer or along the duct walls. If more than 50dB DIL is required, contact your local Vibro-Acoustics Representative or call **1-800-565-8401**.

Length (in.)	Face Velocity (ft. per min)	Octave Band - Hz/Dynamic Insertion Loss (dB)							
		63	125	250	500	1000	2000	4000	8000
36	- 500	10	11	14	18	26	30	18	9
	+ 500	9	10	13	17	25	31	20	10
60	- 500	12	14	21	29	37	41	25	10
	+ 500	11	13	20	28	37	45	29	13
84	- 500	14	17	29	39	48	52	31	12
	+ 500	12	15	28	39	48	55	37	15
108	- 500	16	20	35	40	48	55	29	14
	+ 500	13	18	33	40	48	55	43	18

Pressure Drop (PD)

Pressure drops are reported in accordance with ASTM E477 methods and are based upon **ideal** flow conditions (5 diameters of straight duct on silencer inlet and 10 on outlet). Less than ideal conditions will result in an increase in pressure drop due to System Effects. See Silencer System Effects Data.

Length (in.)	Face Velocity (ft. per min) / Pressure Drop (in.w.g.)						
	250	500	750	1000	1250	1500	1750
36	0.03	0.12	0.26	0.47	0.73	1.06	1.44
60	0.04	0.15	0.34	0.60	0.94	1.36	1.85
84	0.05	0.19	0.44	0.78	1.22	1.75	2.38
108	0.05	0.20	0.46	0.81	1.27	1.83	2.50

☐ Acceptable (0 - 0.35") ☐ Caution (>0.35") Pressure Drop may be too high for certain applications

Generated Noise (GN)

@ 5 sq.ft. face area

Length (in.)	Face Velocity (ft. per min)	Octave Band - Hz/Generated Noise (dB re 10^{-12} watts)							
		63	125	250	500	1K	2K	4K	8K
All	- 750	57	46	46	46	49	53	44	35
	- 500	55	45	42	41	44	42	30	32
	+ 500	57	42	41	39	36	29	25	31
	+ 750	59	49	47	46	43	41	36	33

GN correction chart at right must be used to correct GN to other face areas. →

Face Area (sq.ft.)	2.5	5	10	20	40	80
dB	-3	0	+3	+6	+9	+12

Cross Section Sizes*

"A" dimension (in.)
10.5-11.5
21-23
42-46
63-69
105-115
126-138
147-161
168-184
189-207

"B" dimension
ANY SIZE

See Rectangular Silencer Cross-Section Dimensions to ensure selection matches ductwork dimensions.

RFMB-ULV-F6

Rectangular Film MoldBlock
Ultra low velocity silencer
(<500 fpm)

How to Specify Example:

40 X **21** **RFMB-ULV-F6** X **60**

Duct Width	Duct Height	Silencer Model	Silencer Length

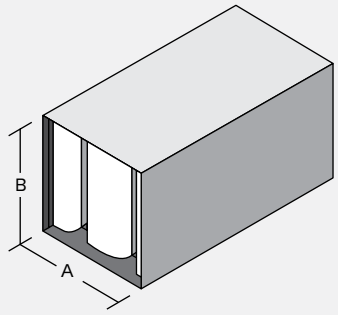

Insertion Loss (IL)

+ : "forward flow" where noise & airflow move in same direction (e.g. supply side)

- : "reverse flow" where noise & airflow move in opposite directions (e.g. return side)

See Silencer Selection Instructions. DIL above 50dB may be limited due to noise flanking around the silencer or along the duct walls. If more than 50dB DIL is required, contact your local Vibro-Acoustics Representative or call **1-800-565-8401**.

Length (in.)	Face Velocity (ft. per min)	Octave Band - Hz/Dynamic Insertion Loss (dB)							
		63	125	250	500	1000	2000	4000	8000
36	- 500	9	10	14	19	27	31	20	9
	+ 500	8	9	13	18	27	32	22	10
60	- 500	11	14	21	29	38	43	27	11
	+ 500	10	12	20	28	38	45	31	13
84	- 500	14	17	28	40	49	54	35	13
	+ 500	12	15	26	39	49	55	40	16
108	- 500	16	21	35	40	49	55	42	15
	+ 500	13	18	32	41	49	55	46	19

Pressure Drop (PD)

Pressure drops are reported in accordance with ASTM E477 methods and are based upon **ideal** flow conditions (5 diameters of straight duct on silencer inlet and 10 on outlet). Less than ideal conditions will result in an increase in pressure drop due to System Effects. See Silencer System Effects Data.

Length (in.)	Face Velocity (ft. per min) / Pressure Drop (in.w.g.)						
	250	500	750	1000	1250	1500	1750
36	0.03	0.13	0.28	0.50	0.78	1.13	1.53
60	0.04	0.16	0.36	0.64	0.99	1.43	1.95
84	0.05	0.20	0.45	0.81	1.26	1.82	2.47
108	0.05	0.22	0.49	0.87	1.36	1.96	2.66

☐ Acceptable (0 - 0.35") ☐ Caution (>0.35") Pressure Drop may be too high for certain applications

Generated Noise (GN)

@ 5 sq.ft. face area

Length (in.)	Face Velocity (ft. per min)	Octave Band - Hz/Generated Noise (dB re 10^{-12} watts)							
		63	125	250	500	1K	2K	4K	8K
All	- 750	57	47	47	47	49	53	44	36
	- 500	55	45	42	42	44	42	30	32
	+ 500	57	43	42	40	36	28	25	31
	+ 750	59	50	47	46	43	41	35	33

GN correction chart at right must be used to correct GN to other face areas. →

Face Area (sq.ft.)	2.5	5	10	20	40	80
dB	-3	0	+3	+6	+9	+12

Cross Section Sizes*

"A" dimension (in.)
9.5-10.5
19-21
38-42
57-63
76-84
95-105
114-126
133-147
152-168
171-189

"B" dimension
ANY SIZE

See Rectangular Silencer Cross-Section Dimensions to ensure selection matches ductwork dimensions.

RFMB-ULV-F7

Rectangular Film MoldBlock
Ultra low velocity silencer
(<500 fpm)

How to Specify Example:

37 X **21** **RFMB-ULV-F7** X **60**

Duct Width	Duct Height	Silencer Model	Silencer Length

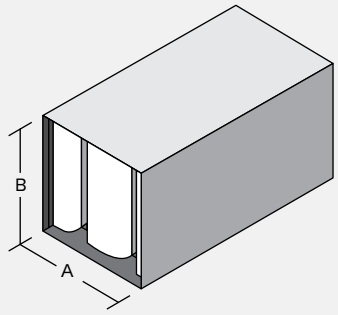

Insertion Loss (IL)

+ : "forward flow" where noise & airflow move in same direction (e.g. supply side)

- : "reverse flow" where noise & airflow move in opposite directions (e.g. return side)

See Silencer Selection Instructions. DIL above 50dB may be limited due to noise flanking around the silencer or along the duct walls. If more than 50dB DIL is required, contact your local Vibro-Acoustics Representative or call **1-800-565-8401**.

Length (in.)	Face Velocity (ft. per min)	Octave Band - Hz/Dynamic Insertion Loss (dB)							
		63	125	250	500	1000	2000	4000	8000
36	- 500	8	10	14	19	28	32	23	9
	+ 500	8	8	12	18	28	33	24	11
60	- 500	11	14	21	30	40	44	30	11
	+ 500	10	12	19	29	39	46	34	14
84	- 500	14	18	28	40	51	55	38	14
	+ 500	12	15	26	40	51	55	43	17
108	- 500	16	21	35	41	51	55	45	17
	+ 500	13	19	32	41	51	55	48	19

Pressure Drop (PD)

Pressure drops are reported in accordance with ASTM E477 methods and are based upon **ideal** flow conditions (5 diameters of straight duct on silencer inlet and 10 on outlet). Less than ideal conditions will result in an increase in pressure drop due to System Effects. See Silencer System Effects Data.

Length (in.)	Face Velocity (ft. per min) / Pressure Drop (in.w.g.)						
	250	500	750	1000	1250	1500	1750
36	0.03	0.13	0.30	0.53	0.83	1.19	1.62
60	0.04	0.17	0.38	0.67	1.05	1.51	2.05
84	0.05	0.21	0.47	0.83	1.30	1.88	2.56
108	0.06	0.23	0.52	0.93	1.45	2.08	2.83

☐ Acceptable (0 - 0.35") ☐ Caution (>0.35") Pressure Drop may be too high for certain applications

Generated Noise (GN)

@ 5 sq.ft. face area

Length (in.)	Face Velocity (ft. per min)	Octave Band - Hz/Generated Noise (dB re 10^{-12} watts)							
		63	125	250	500	1K	2K	4K	8K
All	- 750	56	47	48	48	50	53	45	36
	- 500	54	46	43	43	45	42	30	32
	+ 500	56	43	42	40	36	28	25	31
	+ 750	59	50	47	46	43	41	34	33

GN correction chart at right must be used to correct GN to other face areas. →

Face Area (sq.ft.)	2.5	5	10	20	40	80
dB	-3	0	+3	+6	+9	+12

Cross Section Sizes*

"A" dimension (in.)
8.25-9.5
16.5-19
33-38
49.7-57
66-76
82.5-95
99-114
115.5-133
132-152
148.5-171

"B" dimension
ANY SIZE

See Rectangular Silencer Cross-Section Dimensions to ensure selection matches ductwork dimensions.

CERTIFIED PERFORMANCE DATA

VIBRO-ACOUSTICS®
A Swegon Group company

RFMB-ULV-F8

Rectangular Film MoldBlock
Ultra low velocity silencer
(<500 fpm)

How to Specify Example:

14 X **22** **RFMB-ULV-F8** X **60**

Duct Width	Duct Height	Silencer Model	Silencer Length

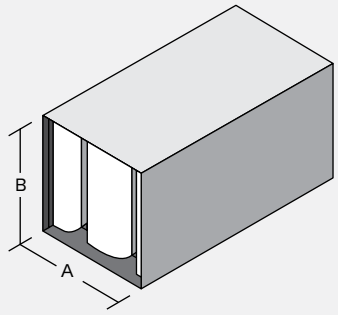

Insertion Loss (IL)

+ : "forward flow" where noise & airflow move in same direction (e.g. supply side)

- : "reverse flow" where noise & airflow move in opposite directions (e.g. return side)

See Silencer Selection Instructions. DIL above 50dB may be limited due to noise flanking around the silencer or along the duct walls. If more than 50dB DIL is required, contact your local Vibro-Acoustics Representative or call **1-800-565-8401**.

Length (in.)	Face Velocity (ft. per min)	Octave Band - Hz/Dynamic Insertion Loss (dB)							
		63	125	250	500	1000	2000	4000	8000
36	- 500	6	9	13	20	26	30	29	12
	+ 500	5	6	12	19	25	30	28	12
60	- 500	9	14	20	31	41	45	31	14
	+ 500	7	12	19	30	41	45	32	14
84	- 500	13	19	27	43	55	55	34	15
	+ 500	10	17	25	41	55	55	36	15
108	- 500	16	24	34	44	55	55	29	18
	+ 500	12	22	31	44	55	55	42	18

Pressure Drop (PD)

Pressure drops are reported in accordance with ASTM E477 methods and are based upon **ideal** flow conditions (5 diameters of straight duct on silencer inlet and 10 on outlet). Less than ideal conditions will result in an increase in pressure drop due to System Effects. See Silencer System Effects Data.

Length (in.)	Face Velocity (ft. per min) / Pressure Drop (in.w.g.)						
	250	500	750	1000	1250	1500	1750
36	0.04	0.16	0.35	0.63	0.98	1.42	1.93
60	0.05	0.19	0.42	0.75	1.18	1.70	2.31
84	0.05	0.22	0.49	0.88	1.37	1.98	2.69
108	0.06	0.25	0.57	1.00	1.57	2.26	3.08

☐ Acceptable (0 - 0.35") ☐ Caution (>0.35") Pressure Drop may be too high for certain applications

Generated Noise (GN)

@ 5 sq.ft. face area

Length (in.)	Face Velocity (ft. per min)	Octave Band - Hz/Generated Noise (dB re 10^{-12} watts)							
		63	125	250	500	1K	2K	4K	8K
All	- 750	55	46	49	51	49	51	42	37
	- 500	56	46	44	46	43	38	26	34
	+ 500	55	45	43	44	36	26	26	34
	+ 750	60	51	45	43	39	36	26	34

GN correction chart at right must be used to correct GN to other face areas. →

Face Area (sq.ft.)	2.5	5	10	20	40	80
dB	-3	0	+3	+6	+9	+12

Cross Section Sizes*

"A" dimension (in.)
6.75-8.25
13.5-16.5
27-33
40.5-49.5
54-66
67.5-82.5
81-99
94.5-115.5
108-132
121.5-148.5

"B" dimension
ANY SIZE

See Rectangular Silencer Cross-Section Dimensions to ensure selection matches ductwork dimensions.

RFMB-ULV-F9

Rectangular Film MoldBlock
Ultra low velocity silencer
(<500 fpm)

How to Specify Example:

21 X **21** **RFMB-ULV-F9** X **60**

Duct Width	Duct Height	Silencer Model	Silencer Length

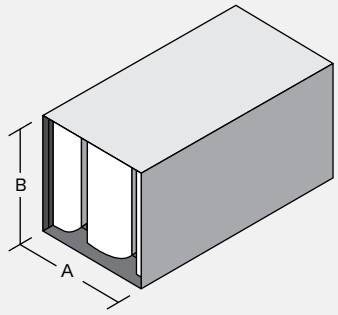

Insertion Loss (IL)

+ : "forward flow" where noise & airflow move in same direction (e.g. supply side)

- : "reverse flow" where noise & airflow move in opposite directions (e.g. return side)

See Silencer Selection Instructions. DIL above 50dB may be limited due to noise flanking around the silencer or along the duct walls. If more than 50dB DIL is required, contact your local Vibro-Acoustics Representative or call **1-800-565-8401**.

Length (in.)	Face Velocity (ft. per min)	Octave Band - Hz/Dynamic Insertion Loss (dB)							
		63	125	250	500	1000	2000	4000	8000
36	- 500	7	8	13	21	33	35	29	9
	+ 500	5	6	11	19	32	35	31	11
60	- 500	10	13	20	31	44	47	39	13
	+ 500	8	10	18	30	44	47	41	15
84	- 500	13	19	27	41	55	55	48	17
	+ 500	11	15	24	40	55	55	52	19
108	- 500	17	24	34	43	55	55	55	20
	+ 500	13	20	30	44	55	55	55	22

Pressure Drop (PD)

Pressure drops are reported in accordance with ASTM E477 methods and are based upon **ideal** flow conditions (5 diameters of straight duct on silencer inlet and 10 on outlet). Less than ideal conditions will result in an increase in pressure drop due to System Effects. See Silencer System Effects Data.

Length (in.)	Face Velocity (ft. per min) / Pressure Drop (in.w.g.)						
	250	500	750	1000	1250	1500	1750
36	0.04	0.16	0.35	0.62	0.97	1.40	1.90
60	0.05	0.19	0.43	0.77	1.20	1.73	2.36
84	0.06	0.23	0.52	0.92	1.44	2.07	2.82
108	0.07	0.27	0.61	1.09	1.70	2.45	3.34

☐ Acceptable (0 - 0.35") ☐ Caution (>0.35") Pressure Drop may be too high for certain applications

Generated Noise (GN)

@ 5 sq.ft. face area

Length (in.)	Face Velocity (ft. per min)	Octave Band - Hz/Generated Noise (dB re 10^{-12} watts)							
		63	125	250	500	1K	2K	4K	8K
All	- 750	55	49	51	52	51	54	45	37
	- 500	54	57	46	45	45	40	28	32
	+ 500	55	45	44	43	37	27	25	31
	+ 750	58	51	48	47	43	39	30	33

GN correction chart at right must be used to correct GN to other face areas. →

Face Area (sq.ft.)	2.5	5	10	20	40	80
dB	-3	0	+3	+6	+9	+12

Cross Section Sizes*

"A" dimension (in.)
5-6.75
10-13.5
20-27
30-40.5
40-54
50-67.5
60-81
70-94.5
80-108
90-121.5

"B" dimension
ANY SIZE

See Rectangular Silencer Cross-Section Dimensions to ensure selection matches ductwork dimensions.

CERTIFIED PERFORMANCE DATA

VIBRO-ACOUSTICS®
A Swegon Group company

RFMB-LV-F1

Rectangular Film MoldBlock
Low velocity silencer
(<750 fpm)

How to Specify Example:

32 X **21** **RFMB-LV-F1** X **60**

Duct Width	Duct Height	Silencer Model	Silencer Length

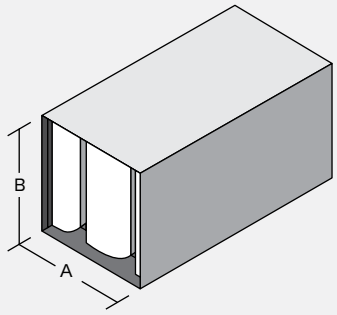

Insertion Loss (IL)

+ : "forward flow" where noise & airflow move in same direction (e.g. supply side)

- : "reverse flow" where noise & airflow move in opposite directions (e.g. return side)

See Silencer Selection Instructions. DIL above 50dB may be limited due to noise flanking around the silencer or along the duct walls. If more than 50dB DIL is required, contact your local Vibro-Acoustics Representative or call **1-800-565-8401**.

Length (in.)	Face Velocity (ft. per min)	Octave Band - Hz/Dynamic Insertion Loss (dB)							
		63	125	250	500	1000	2000	4000	8000
36	- 750	9	10	13	13	18	19	17	11
	+ 750	7	9	12	12	17	23	18	11
60	- 750	11	13	21	23	28	27	20	12
	+ 750	9	12	19	22	27	29	21	12
84	- 750	14	15	29	33	38	36	23	13
	+ 750	11	14	27	31	38	35	25	13
108	- 750	17	18	37	39	46	45	26	14
	+ 750	14	17	34	39	46	43	29	15

Pressure Drop (PD)

Pressure drops are reported in accordance with ASTM E477 methods and are based upon **ideal** flow conditions (5 diameters of straight duct on silencer inlet and 10 on outlet). Less than ideal conditions will result in an increase in pressure drop due to System Effects. See Silencer System Effects Data.

Length (in.)	Face Velocity (ft. per min) / Pressure Drop (in.w.g.)						
	250	500	750	1000	1250	1500	1750
36	0.02	0.07	0.15	0.27	0.42	0.61	0.83
60	0.02	0.09	0.20	0.36	0.56	0.80	1.09
84	0.03	0.11	0.25	0.44	0.70	1.00	1.36
108	0.03	0.13	0.30	0.53	0.83	1.20	1.63

☐ Acceptable (0 - 0.35") ☐ Caution (>0.35") Pressure Drop may be too high for certain applications

Generated Noise (GN)

@ 5 sq.ft. face area

Length (in.)	Face Velocity (ft. per min)	Octave Band - Hz/Generated Noise (dB re 10^{-12} watts)							
		63	125	250	500	1K	2K	4K	8K
All	- 750	58	43	42	44	47	48	37	32
	- 500	56	43	39	38	38	32	23	30
	+ 500	61	40	37	36	32	23	23	31
	+ 750	58	44	42	43	42	37	30	30

GN correction chart at right must be used to correct GN to other face areas. →

Face Area (sq.ft.)	2.5	5	10	20	40	80
dB	-3	0	+3	+6	+9	+12

Cross Section Sizes*

"A" dimension (in.)
14.5-15.5
29-31
58-62
87-93
116-124
145-155
174-186
203-217
232-248

"B" dimension
ANY SIZE

See Rectangular Silencer Cross-Section Dimensions to ensure selection matches ductwork dimensions.

CERTIFIED PERFORMANCE DATA

VIBRO-ACOUSTICS®
A Swegon Group company

RFMB-LV-F2

Rectangular Film MoldBlock
Low velocity silencer
(<750 fpm)

How to Specify Example:

27 X **22** **RFMB-LV-F2** X **60**

Duct Width	Duct Height	Silencer Model	Silencer Length

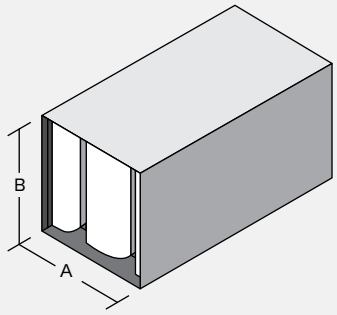

Insertion Loss (IL)

+ : "forward flow" where noise & airflow move in same direction (e.g. supply side)

- : "reverse flow" where noise & airflow move in opposite directions (e.g. return side)

See Silencer Selection Instructions. DIL above 50dB may be limited due to noise flanking around the silencer or along the duct walls. If more than 50dB DIL is required, contact your local Vibro-Acoustics Representative or call **1-800-565-8401**.

Length (in.)	Face Velocity (ft. per min)	Octave Band - Hz/Dynamic Insertion Loss (dB)							
		63	125	250	500	1000	2000	4000	8000
36	- 750	9	9	12	14	19	21	16	10
	+ 750	7	8	11	13	18	24	17	10
60	- 750	11	12	19	24	29	31	20	11
	+ 750	9	11	18	23	28	32	21	11
84	- 750	14	15	27	34	40	41	23	12
	+ 750	11	13	25	32	39	40	26	12
108	- 750	17	18	35	39	46	47	26	13
	+ 750	14	17	33	39	46	48	30	14

Pressure Drop (PD)

Pressure drops are reported in accordance with ASTM E477 methods and are based upon **ideal** flow conditions (5 diameters of straight duct on silencer inlet and 10 on outlet). Less than ideal conditions will result in an increase in pressure drop due to System Effects. See Silencer System Effects Data.

Length (in.)	Face Velocity (ft. per min) / Pressure Drop (in.w.g.)						
	250	500	750	1000	1250	1500	1750
36	0.02	0.07	0.15	0.26	0.41	0.59	0.81
60	0.02	0.09	0.20	0.35	0.55	0.79	1.08
84	0.03	0.11	0.24	0.43	0.67	0.97	1.32
108	0.03	0.12	0.28	0.50	0.77	1.11	1.52

☐ Acceptable (0 - 0.35") ☐ Caution (>0.35") Pressure Drop may be too high for certain applications

Generated Noise (GN)

@ 5 sq.ft. face area

Length (in.)	Face Velocity (ft. per min)	Octave Band - Hz/Generated Noise (dB re 10^{-12} watts)							
		63	125	250	500	1K	2K	4K	8K
All	- 750	57	44	44	45	48	49	37	31
	- 500	55	44	41	39	39	34	23	29
	+ 500	60	40	38	37	33	24	23	30
	+ 750	58	45	43	44	42	38	30	30

GN correction chart at right must be used to correct GN to other face areas. →

Face Area (sq.ft.)	2.5	5	10	20	40	80
dB	-3	0	+3	+6	+9	+12

Cross Section Sizes*

"A" dimension (in.)
13.5-14.5
27-29
54-58
81-8
108-116
135-145
162-174
189-203
216-232

"B" dimension
ANY SIZE

See Rectangular Silencer Cross-Section Dimensions to ensure selection matches ductwork dimensions.

CERTIFIED PERFORMANCE DATA

VIBRO-ACOUSTICS®
A Swegon Group company

RFMB-LV-F3

Rectangular Film MoldBlock
Low velocity silencer
(<750 fpm)

How to Specify Example:

25 X **21** **RFMB-LV-F3** X **60**

Duct Width	Duct Height	Silencer Model	Silencer Length

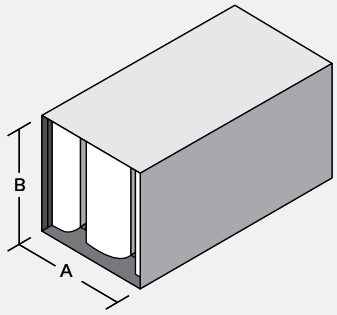

Insertion Loss (IL)

+ : "forward flow" where noise & airflow move in same direction (e.g. supply side)

- : "reverse flow" where noise & airflow move in opposite directions (e.g. return side)

See Silencer Selection Instructions. DIL above 50dB may be limited due to noise flanking around the silencer or along the duct walls. If more than 50dB DIL is required, contact your local Vibro-Acoustics Representative or call **1-800-565-8401**.

Length (in.)	Face Velocity (ft. per min)	Octave Band - Hz/Dynamic Insertion Loss (dB)							
		63	125	250	500	1000	2000	4000	8000
36	- 750	8	8	11	16	20	23	15	9
	+ 750	7	7	10	14	18	24	16	9
60	- 750	11	11	18	25	31	35	19	10
	+ 750	9	10	17	24	29	35	21	10
84	- 750	14	14	25	35	43	46	24	11
	+ 750	12	13	23	33	40	45	26	12
108	- 750	16	19	34	38	45	49	27	12
	+ 750	14	16	31	39	45	52	31	14

Pressure Drop (PD)

Pressure drops are reported in accordance with ASTM E477 methods and are based upon **ideal** flow conditions (5 diameters of straight duct on silencer inlet and 10 on outlet). Less than ideal conditions will result in an increase in pressure drop due to System Effects. See Silencer System Effects Data.

Length (in.)	Face Velocity (ft. per min) / Pressure Drop (in.w.g.)						
	250	500	750	1000	1250	1500	1750
36	0.02	0.06	0.14	0.26	0.40	0.58	0.79
60	0.02	0.09	0.19	0.35	0.54	0.78	1.06
84	0.03	0.10	0.23	0.41	0.65	0.93	1.27
108	0.03	0.11	0.26	0.46	0.71	1.03	1.40

☐ Acceptable (0 - 0.35") ☐ Caution (>0.35") Pressure Drop may be too high for certain applications

Generated Noise (GN)

@ 5 sq.ft. face area

Length (in.)	Face Velocity (ft. per min)	Octave Band - Hz/Generated Noise (dB re 10^{-12} watts)							
		63	125	250	500	1K	2K	4K	8K
All	- 750	56	46	46	47	48	49	38	31
	- 500	55	44	43	40	40	35	24	28
	+ 500	58	40	39	38	33	24	22	29
	+ 750	58	46	44	44	42	39	31	30

GN correction chart at right must be used to correct GN to other face areas. →

Face Area (sq.ft.)	2.5	5	10	20	40	80
dB	-3	0	+3	+6	+9	+12

Cross Section Sizes*

"A" dimension (in.)
12.5-13.5
25-27
50-54
75-81
100-108
125-135
150-162
175-189
200-216
225-243

"B" dimension
ANY SIZE

See Rectangular Silencer Cross-Section Dimensions to ensure selection matches ductwork dimensions.

CERTIFIED PERFORMANCE DATA

VIBRO-ACOUSTICS®
A Swegon Group company

RFMB-LV-F4

Rectangular Film MoldBlock
Low velocity silencer
(<750 fpm)

How to Specify Example:

47 X **22** **RFMB-LV-F4** X **60**

Duct Width	Duct Height	Silencer Model	Silencer Length

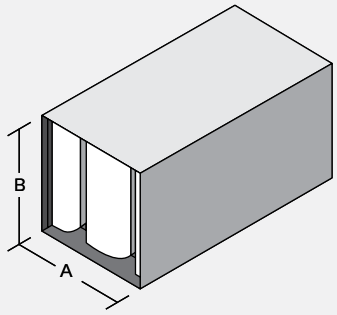

Insertion Loss (IL)

+ : "forward flow" where noise & airflow move in same direction (e.g. supply side)

- : "reverse flow" where noise & airflow move in opposite directions (e.g. return side)

See Silencer Selection Instructions. DIL above 50dB may be limited due to noise flanking around the silencer or along the duct walls. If more than 50dB DIL is required, contact your local Vibro-Acoustics Representative or call **1-800-565-8401**.

Length (in.)	Face Velocity (ft. per min)	Octave Band - Hz/Dynamic Insertion Loss (dB)							
		63	125	250	500	1000	2000	4000	8000
36	- 750	8	7	11	17	21	25	14	8
	+ 750	7	6	10	15	19	25	15	8
60	- 750	11	10	17	26	33	38	19	9
	+ 750	9	9	15	24	31	38	21	9
84	- 750	14	14	23	36	45	51	24	11
	+ 750	12	12	21	33	42	50	27	11
108	- 750	15	19	33	38	45	51	27	12
	+ 750	14	16	30	39	44	55	33	13

Pressure Drop (PD)

Pressure drops are reported in accordance with ASTM E477 methods and are based upon **ideal** flow conditions (5 diameters of straight duct on silencer inlet and 10 on outlet). Less than ideal conditions will result in an increase in pressure drop due to System Effects. See Silencer System Effects Data.

Length (in.)	Face Velocity (ft. per min) / Pressure Drop (in.w.g.)						
	250	500	750	1000	1250	1500	1750
36	0.02	0.06	0.14	0.25	0.39	0.56	0.77
60	0.02	0.09	0.19	0.34	0.53	0.77	1.04
84	0.03	0.10	0.23	0.40	0.63	0.90	1.23
108	0.03	0.10	0.24	0.42	0.66	0.94	1.29

☐ Acceptable (0 - 0.35") ☐ Caution (>0.35") Pressure Drop may be too high for certain applications

Generated Noise (GN)

@ 5 sq.ft. face area

Length (in.)	Face Velocity (ft. per min)	Octave Band - Hz/Generated Noise (dB re 10^{-12} watts)							
		63	125	250	500	1K	2K	4K	8K
All	- 750	55	47	48	48	49	50	38	30
	- 500	55	45	45	42	42	36	24	28
	+ 500	57	41	41	38	34	25	22	28
	+ 750	57	46	45	45	42	39	31	29

GN correction chart at right must be used to correct GN to other face areas. →

Face Area (sq.ft.)	2.5	5	10	20	40	80
dB	-3	0	+3	+6	+9	+12

Cross Section Sizes*

"A" dimension (in.)
11.5-12.5
23-25
46-50
69-75
92-100
115-125
138-150
161-175
207-225

"B" dimension
ANY SIZE

See Rectangular Silencer Cross-Section Dimensions to ensure selection matches ductwork dimensions.

CERTIFIED PERFORMANCE DATA

VIBRO-ACOUSTICS®
A Swegon Group company

RFMB-LV-F5

Rectangular Film MoldBlock
Low velocity silencer
(<750 fpm)

How to Specify Example:

44 X **22** **RFMB-LV-F5** X **60**

Duct Width	Duct Height	Silencer Model	Silencer Length

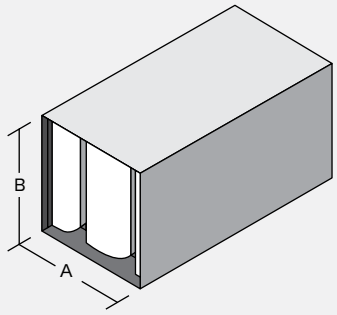

Insertion Loss (IL)

+ : "forward flow" where noise & airflow move in same direction (e.g. supply side)

- : "reverse flow" where noise & airflow move in opposite directions (e.g. return side)

See Silencer Selection Instructions. DIL above 50dB may be limited due to noise flanking around the silencer or along the duct walls. If more than 50dB DIL is required, contact your local Vibro-Acoustics Representative or call **1-800-565-8401**.

Length (in.)	Face Velocity (ft. per min)	Octave Band - Hz/Dynamic Insertion Loss (dB)							
		63	125	250	500	1000	2000	4000	8000
36	- 750	8	7	11	17	22	26	16	8
	+ 750	7	6	10	16	21	26	17	8
60	- 750	11	11	17	27	34	39	22	10
	+ 750	9	9	15	25	32	39	24	10
84	- 750	14	15	22	36	47	51	28	12
	+ 750	12	12	21	34	44	52	31	12
108	- 750	15	19	32	39	46	51	30	12
	+ 750	14	16	29	40	46	55	36	14

Pressure Drop (PD)

Pressure drops are reported in accordance with ASTM E477 methods and are based upon **ideal** flow conditions (5 diameters of straight duct on silencer inlet and 10 on outlet). Less than ideal conditions will result in an increase in pressure drop due to System Effects. See Silencer System Effects Data.

Length (in.)	Face Velocity (ft. per min) / Pressure Drop (in.w.g.)						
	250	500	750	1000	1250	1500	1750
36	0.02	0.06	0.15	0.26	0.41	0.59	0.80
60	0.02	0.09	0.21	0.37	0.58	0.83	1.13
84	0.03	0.11	0.24	0.43	0.67	0.96	1.31
108	0.03	0.11	0.25	0.45	0.70	1.00	1.37

☐ Acceptable (0 - 0.35") ☐ Caution (>0.35") Pressure Drop may be too high for certain applications

Generated Noise (GN)

@ 5 sq.ft. face area

Length (in.)	Face Velocity (ft. per min)	Octave Band - Hz/Generated Noise (dB re 10^{-12} watts)							
		63	125	250	500	1K	2K	4K	8K
All	- 750	55	47	47	49	50	50	38	30
	- 500	54	45	46	43	42	36	24	28
	+ 500	57	41	41	39	33	24	22	28
	+ 750	57	46	44	45	42	38	30	29

GN correction chart at right must be used to correct GN to other face areas. →

Face Area (sq.ft.)	2.5	5	10	20	40	80
dB	-3	0	+3	+6	+9	+12

Cross Section Sizes*

"A" dimension (in.)
10.5-11.5
21-23
42-46
63-69
84-92
105-115
126-138
147-161
168-184
189-207

"B" dimension
ANY SIZE

See Rectangular Silencer Cross-Section Dimensions to ensure selection matches ductwork dimensions.

CERTIFIED PERFORMANCE DATA

VIBRO-ACOUSTICS®
A Swegon Group company

RFMB-LV-F6

Rectangular Film MoldBlock
Low velocity silencer
(<750 fpm)

How to Specify Example:

40 X **21** **RFMB-LV-F6** X **60**

Duct Width | Duct Height | Silencer Model | Silencer Length

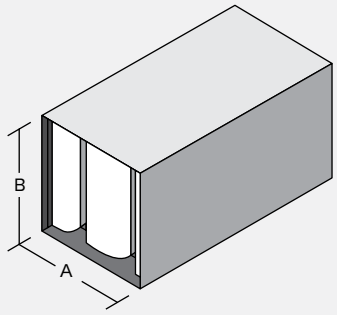

Insertion Loss (IL)

+ : "forward flow" where noise & airflow move in same direction (e.g. supply side)

- : "reverse flow" where noise & airflow move in opposite directions (e.g. return side)

See Silencer Selection Instructions. DIL above 50dB may be limited due to noise flanking around the silencer or along the duct walls. If more than 50dB DIL is required, contact your local Vibro-Acoustics Representative or call **1-800-565-8401**.

Length (in.)	Face Velocity (ft. per min)	Octave Band - Hz/Dynamic Insertion Loss (dB)							
		63	125	250	500	1000	2000	4000	8000
36	- 750	8	7	11	18	24	27	18	8
	+ 750	6	6	10	16	22	27	19	8
60	- 750	11	11	17	27	36	39	25	10
	+ 750	9	9	15	25	34	40	27	11
84	- 750	15	15	22	37	48	51	32	12
	+ 750	12	13	20	34	46	53	35	13
108	- 750	15	19	32	40	47	52	34	13
	+ 750	14	16	29	40	47	55	40	15

Pressure Drop (PD)

Pressure drops are reported in accordance with ASTM E477 methods and are based upon **ideal** flow conditions (5 diameters of straight duct on silencer inlet and 10 on outlet). Less than ideal conditions will result in an increase in pressure drop due to System Effects. See Silencer System Effects Data.

Length (in.)	Face Velocity (ft. per min) / Pressure Drop (in.w.g.)						
	250	500	750	1000	1250	1500	1750
36	0.02	0.07	0.15	0.27	0.42	0.61	0.83
60	0.02	0.10	0.22	0.40	0.62	0.89	1.21
84	0.03	0.11	0.26	0.45	0.71	1.02	1.39
108	0.03	0.12	0.27	0.47	0.74	1.06	1.44

☐ Acceptable (0 - 0.35") ☐ Caution (>0.35") Pressure Drop may be too high for certain applications

Generated Noise (GN)

@ 5 sq.ft. face area

Length (in.)	Face Velocity (ft. per min)	Octave Band - Hz/Generated Noise (dB re 10^{-12} watts)							
		63	125	250	500	1K	2K	4K	8K
All	- 750	54	47	47	49	50	50	38	30
	- 500	54	45	47	45	43	37	25	28
	+ 500	56	41	41	40	33	23	22	28
	+ 750	56	46	44	44	41	38	29	29

GN correction chart at right must be used to correct GN to other face areas. →

Face Area (sq.ft.)	2.5	5	10	20	40	80
dB	-3	0	+3	+6	+9	+12

Cross Section Sizes*

"A" dimension (in.)
9.5-10.5
19-21
38-42
57-63
76-84
95-105
114-126
133-147
152-168
171-189

"B" dimension
ANY SIZE

See Rectangular Silencer Cross-Section Dimensions to ensure selection matches ductwork dimensions.

RFMB-LV-F7

Rectangular Film MoldBlock
Low velocity silencer
(<750 fpm)

How to Specify Example:

37 X **21** **RFMB-F7** X **60**

Duct Width	Duct Height	Silencer Model	Silencer Length

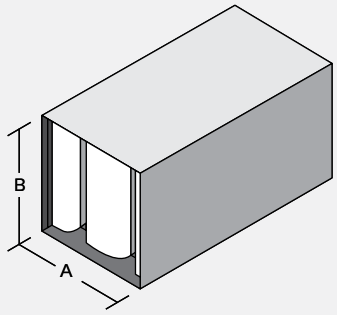

Insertion Loss (IL)

+ : "forward flow" where noise & airflow move in same direction (e.g. supply side)

- : "reverse flow" where noise & airflow move in opposite directions (e.g. return side)

See Silencer Selection Instructions. DIL above 50dB may be limited due to noise flanking around the silencer or along the duct walls. If more than 50dB DIL is required, contact your local Vibro-Acoustics Representative or call **1-800-565-8401**.

Length (in.)	Face Velocity (ft. per min)	Octave Band - Hz/Dynamic Insertion Loss (dB)							
		63	125	250	500	1000	2000	4000	8000
36	- 750	7	6	11	18	25	29	20	9
	+ 750	6	6	10	17	24	28	21	8
60	- 750	11	11	17	28	37	40	28	11
	+ 750	9	9	15	26	36	41	30	11
84	- 750	15	16	22	37	49	51	36	13
	+ 750	12	13	20	35	48	55	39	14
108	- 750	15	19	31	40	49	53	37	13
	+ 750	14	16	28	41	49	55	43	16

Pressure Drop (PD)

Pressure drops are reported in accordance with ASTM E477 methods and are based upon **ideal** flow conditions (5 diameters of straight duct on silencer inlet and 10 on outlet). Less than ideal conditions will result in an increase in pressure drop due to System Effects. See Silencer System Effects Data.

Length (in.)	Face Velocity (ft. per min) / Pressure Drop (in.w.g.)						
	250	500	750	1000	1250	1500	1750
36	0.02	0.07	0.16	0.28	0.44	0.63	0.86
60	0.03	0.11	0.24	0.43	0.66	0.96	1.30
84	0.03	0.12	0.27	0.48	0.75	1.08	1.47
108	0.03	0.12	0.28	0.50	0.78	1.12	1.52

☐ Acceptable (0 - 0.35") ☐ Caution (>0.35") Pressure Drop may be too high for certain applications

Generated Noise (GN)

@ 5 sq.ft. face area

Length (in.)	Face Velocity (ft. per min)	Octave Band - Hz/Generated Noise (dB re 10^{-12} watts)							
		63	125	250	500	1K	2K	4K	8K
All	- 750	54	47	47	50	51	50	39	30
	- 500	54	46	48	46	43	37	25	28
	+ 500	56	41	42	42	32	22	22	28
	+ 750	56	45	43	44	41	37	28	29

GN correction chart at right must be used to correct GN to other face areas. →

Face Area (sq.ft.)	2.5	5	10	20	40	80
dB	-3	0	+3	+6	+9	+12

Cross Section Sizes*

"A" dimension (in.)
8.25-9.5
16.5-19
33-38
49.5-57
66-76
82.5-95
99-114
115.5-133
132-152
148.5-171

"B" dimension
ANY SIZE

See Rectangular Silencer Cross-Section Dimensions to ensure selection matches ductwork dimensions.

CERTIFIED PERFORMANCE DATA

VIBRO-ACOUSTICS®
A Swegon Group company

RFMB-LV-F8

Rectangular Film MoldBlock
Low velocity silencer
(<750 fpm)

How to Specify Example:

14 X **22** **RFMB-LV-F8** X **60**

Duct Width	Duct Height	Silencer Model	Silencer Length

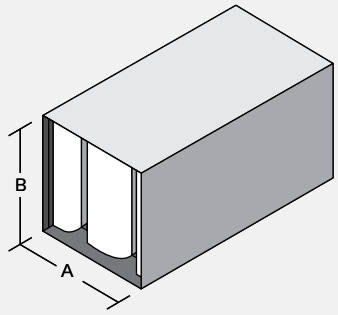

Insertion Loss (IL)

+ : "forward flow" where noise & airflow move in same direction (e.g. supply side)

- : "reverse flow" where noise & airflow move in opposite directions (e.g. return side)

See Silencer Selection Instructions. DIL above 50dB may be limited due to noise flanking around the silencer or along the duct walls. If more than 50dB DIL is required, contact your local Vibro-Acoustics Representative or call **1-800-565-8401**.

Length (in.)	Face Velocity (ft. per min)	Octave Band - Hz/Dynamic Insertion Loss (dB)							
		63	125	250	500	1000	2000	4000	8000
36	- 750	5	7	12	19	23	26	24	11
	+ 750	4	6	11	18	22	26	25	10
60	- 750	9	12	19	31	39	41	29	12
	+ 750	7	10	17	30	39	43	31	12
84	- 750	13	17	26	43	55	55	34	13
	+ 750	10	14	23	41	55	55	36	14
108	- 750	17	22	33	44	55	55	42	15
	+ 750	12	18	29	44	55	55	45	16

Pressure Drop (PD)

Pressure drops are reported in accordance with ASTM E477 methods and are based upon **ideal** flow conditions (5 diameters of straight duct on silencer inlet and 10 on outlet). Less than ideal conditions will result in an increase in pressure drop due to System Effects. See Silencer System Effects Data.

Length (in.)	Face Velocity (ft. per min) / Pressure Drop (in.w.g.)						
	250	500	750	1000	1250	1500	1750
36	0.02	0.08	0.18	0.32	0.50	0.72	0.98
60	0.03	0.10	0.24	0.42	0.66	0.95	1.29
84	0.03	0.13	0.29	0.52	0.81	1.17	1.59
108	0.04	0.16	0.35	0.62	0.97	1.40	1.90

☐ Acceptable (0 - 0.35") ☐ Caution (>0.35") Pressure Drop may be too high for certain applications

Generated Noise (GN)

@ 5 sq.ft. face area

Length (in.)	Face Velocity (ft. per min)	Octave Band - Hz/Generated Noise (dB re 10^{-12} watts)							
		63	125	250	500	1K	2K	4K	8K
All	- 750	54	43	44	49	50	48	36	30
	- 500	56	47	48	52	43	35	23	30
	+ 500	55	42	43	46	30	19	23	30
	+ 750	56	44	39	40	37	32	22	30

GN correction chart at right must be used to correct GN to other face areas. →

Face Area (sq.ft.)	2.5	5	10	20	40	80
dB	-3	0	+3	+6	+9	+12

Cross Section Sizes*

"A" dimension (in.)
6.75-8.25
13.5-16.5
27-33
40.5-49.5
54-66
67.5-82.5
81-99
94.5-115.5
108-132
121.5-148.5

"B" dimension
ANY SIZE

See Rectangular Silencer Cross-Section Dimensions to ensure selection matches ductwork dimensions.

RFMB-LV-F9

Rectangular Film MoldBlock
Low velocity silencer
(<750 fpm)

How to Specify Example:

21 X **21** **RFMB-LV-F9** X **60**

Duct Width | Duct Height | Silencer Model | Silencer Length

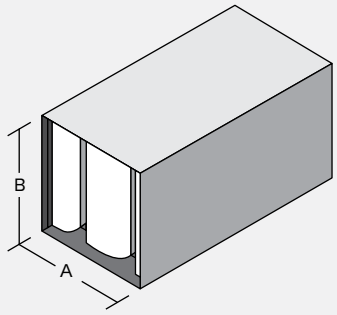

Insertion Loss (IL)

+ : "forward flow" where noise & airflow move in same direction (e.g. supply side)

- : "reverse flow" where noise & airflow move in opposite directions (e.g. return side)

See Silencer Selection Instructions. DIL above 50dB may be limited due to noise flanking around the silencer or along the duct walls. If more than 50dB DIL is required, contact your local Vibro-Acoustics Representative or call **1-800-565-8401**.

Length (in.)	Face Velocity (ft. per min)	Octave Band - Hz/Dynamic Insertion Loss (dB)							
		63	125	250	500	1000	2000	4000	8000
36	- 750	6	6	11	20	30	32	27	9
	+ 750	5	5	10	18	28	31	27	9
60	- 750	11	12	16	29	42	41	38	13
	+ 750	9	9	14	27	41	45	39	13
84	- 750	16	17	22	38	53	51	49	16
	+ 750	13	14	19	36	53	55	51	17
108	- 750	15	19	29	42	53	54	48	15
	+ 750	13	15	25	42	54	55	54	19

Pressure Drop (PD)

Pressure drops are reported in accordance with ASTM E477 methods and are based upon **ideal** flow conditions (5 diameters of straight duct on silencer inlet and 10 on outlet). Less than ideal conditions will result in an increase in pressure drop due to System Effects. See Silencer System Effects Data.

Length (in.)	Face Velocity (ft. per min) / Pressure Drop (in.w.g.)						
	250	500	750	1000	1250	1500	1750
36	0.02	0.08	0.17	0.31	0.48	0.70	0.95
60	0.03	0.13	0.29	0.51	0.80	1.15	1.56
84	0.04	0.14	0.32	0.56	0.88	1.26	1.72
108	0.04	0.14	0.32	0.57	0.90	1.29	1.76

☐ Acceptable (0 - 0.35") ☐ Caution (>0.35") Pressure Drop may be too high for certain applications

Generated Noise (GN)

@ 5 sq.ft. face area

Length (in.)	Face Velocity (ft. per min)	Octave Band - Hz/Generated Noise (dB re 10^{-12} watts)							
		63	125	250	500	1K	2K	4K	8K
All	- 750	54	46	47	51	52	51	39	31
	- 500	54	47	50	51	45	38	26	28
	+ 500	54	42	43	45	31	20	21	28
	+ 750	54	44	42	43	40	43	25	29

GN correction chart at right must be used to correct GN to other face areas. →

Face Area (sq.ft.)	2.5	5	10	20	40	80
dB	-3	0	+3	+6	+9	+12

Cross Section Sizes*

"A" dimension (in.)
5-6.75
10-13.5
20-27
30-40.5
40-54
50-67.5
60-81
70-94.5
80-108
90-121.5

"B" dimension
ANY SIZE

See Rectangular Silencer Cross-Section Dimensions to ensure selection matches ductwork dimensions.

CERTIFIED PERFORMANCE DATA

VIBRO-ACOUSTICS®
A Swegon Group company

RFMB-MV-F1

Rectangular Film MoldBlock
Medium velocity silencer
(<1250 fpm)

How to Specify Example:

32 X **21** **RFMB-MV-F1** X **60**

Duct Width	Duct Height	Silencer Model	Silencer Length

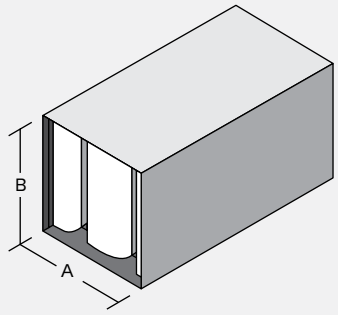

Insertion Loss (IL)

+ : "forward flow" where noise & airflow move in same direction (e.g. supply side)

- : "reverse flow" where noise & airflow move in opposite directions (e.g. return side)

See Silencer Selection Instructions. DIL above 50dB may be limited due to noise flanking around the silencer or along the duct walls. If more than 50dB DIL is required, contact your local Vibro-Acoustics Representative or call **1-800-565-8401**.

Length (in.)	Face Velocity (ft. per min)	Octave Band - Hz/Dynamic Insertion Loss (dB)							
		63	125	250	500	1000	2000	4000	8000
36	- 1250	4	7	14	17	16	15	15	9
	+ 1250	3	5	12	16	15	16	14	8
60	- 1250	7	10	20	21	24	25	17	10
	+ 1250	5	8	18	19	23	24	17	9
84	- 1250	10	14	27	25	32	34	19	10
	+ 1250	8	11	25	23	31	33	20	10
108	- 1250	12	17	35	32	40	42	21	12
	+ 1250	10	14	31	29	40	40	23	12

Pressure Drop (PD)

Pressure drops are reported in accordance with ASTM E477 methods and are based upon **ideal** flow conditions (5 diameters of straight duct on silencer inlet and 10 on outlet). Less than ideal conditions will result in an increase in pressure drop due to System Effects. See Silencer System Effects Data.

Length (in.)	Face Velocity (ft. per min) / Pressure Drop (in.w.g.)						
	500	750	1000	1250	1500	1750	2000
36	0.03	0.07	0.13	0.21	0.30	0.40	0.53
60	0.04	0.10	0.18	0.27	0.40	0.54	0.70
84	0.05	0.12	0.22	0.34	0.49	0.67	0.88
108	0.07	0.15	0.26	0.41	0.59	0.81	1.06

☐ Acceptable (0 - 0.35") ☐ Caution (>0.35") Pressure Drop may be too high for certain applications

Generated Noise (GN)

@ 5 sq.ft. face area

Length (in.)	Face Velocity (ft. per min)	Octave Band - Hz/Generated Noise (dB re 10^{-12} watts)							
		63	125	250	500	1K	2K	4K	8K
All	- 1250	52	50	50	51	52	56	46	32
	- 750	53	42	42	42	44	39	25	24
	+ 750	52	38	36	33	32	29	21	24
	+ 1250	56	51	47	45	45	47	39	30

GN correction chart at right must be used to correct GN to other face areas. →

Face Area (sq.ft.)	2.5	5	10	20	40	80
dB	-3	0	+3	+6	+9	+12

Cross Section Sizes*

"A" dimension (in.)
14.5-15.5
29-31
58-62
87-63
116-124
145-155
174-186
203-217
232-248

"B" dimension
ANY SIZE

See Rectangular Silencer Cross-Section Dimensions to ensure selection matches ductwork dimensions.

CERTIFIED PERFORMANCE DATA

VIBRO-ACOUSTICS®
A Swegon Group company

RFMB-MV-F2

Rectangular Film MoldBlock
Medium velocity silencer
(<1250 fpm)

How to Specify Example:

27 X **22** **RFMB-MV-F2** X **60**

Duct Width	Duct Height	Silencer Model	Silencer Length

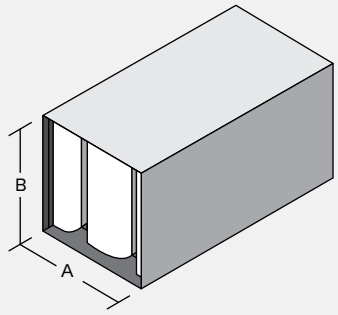

Insertion Loss (IL)

+ : "forward flow" where noise & airflow move in same direction (e.g. supply side)

- : "reverse flow" where noise & airflow move in opposite directions (e.g. return side)

See Silencer Selection Instructions. DIL above 50dB may be limited due to noise flanking around the silencer or along the duct walls. If more than 50dB DIL is required, contact your local Vibro-Acoustics Representative or call **1-800-565-8401**.

Length (in.)	Face Velocity (ft. per min)	Octave Band - Hz/Dynamic Insertion Loss (dB)							
		63	125	250	500	1000	2000	4000	8000
36	- 1250	4	6	13	18	17	15	13	8
	+ 1250	3	5	12	16	16	16	13	8
60	- 1250	7	9	19	22	25	25	16	9
	+ 1250	6	8	17	20	24	26	16	9
84	- 1250	11	13	24	26	33	36	18	10
	+ 1250	8	10	22	24	32	36	19	9
108	- 1250	12	16	33	32	42	42	20	10
	+ 1250	9	14	30	31	42	42	23	11

Pressure Drop (PD)

Pressure drops are reported in accordance with ASTM E477 methods and are based upon **ideal** flow conditions (5 diameters of straight duct on silencer inlet and 10 on outlet). Less than ideal conditions will result in an increase in pressure drop due to System Effects. See Silencer System Effects Data.

Length (in.)	Face Velocity (ft. per min) / Pressure Drop (in.w.g.)						
	500	750	1000	1250	1500	1750	2000
36	0.03	0.07	0.12	0.19	0.27	0.37	0.49
60	0.04	0.09	0.16	0.26	0.37	0.50	0.66
84	0.05	0.11	0.20	0.31	0.45	0.61	0.80
108	0.06	0.13	0.24	0.37	0.54	0.73	0.96

☐ Acceptable (0 - 0.35") ☐ Caution (>0.35") Pressure Drop may be too high for certain applications

Generated Noise (GN)

@ 5 sq.ft. face area

Length (in.)	Face Velocity (ft. per min)	Octave Band - Hz/Generated Noise (dB re 10^{-12} watts)							
		63	125	250	500	1K	2K	4K	8K
All	- 1250	53	50	49	50	52	55	46	32
	- 750	53	42	41	41	44	38	24	24
	+ 750	52	38	36	34	32	29	21	24
	+ 1250	56	51	48	45	45	47	39	30

GN correction chart at right must be used to correct GN to other face areas. →

Face Area (sq.ft.)	2.5	5	10	20	40	80
dB	-3	0	+3	+6	+9	+12

Cross Section Sizes*

"A" dimension (in.)
13.5–14.5
27–29
54–58
81–87
108–116
135–145
162–174
189–203
216–232

"B" dimension
ANY SIZE

See Rectangular Silencer Cross-Section Dimensions to ensure selection matches ductwork dimensions.

CERTIFIED PERFORMANCE DATA

VIBRO-ACOUSTICS®
A Swegon Group company

RFMB-MV-F3

Rectangular Film MoldBlock
Medium velocity silencer
(<1250 fpm)

How to Specify Example:

25 X **21** **RFMB-MV-F3** X **60**

Duct Width	Duct Height	Silencer Model	Silencer Length

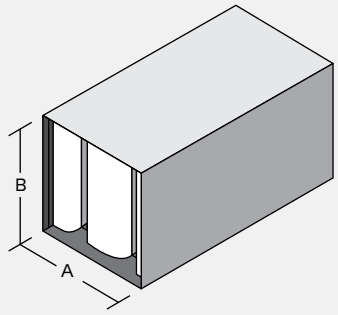

Insertion Loss (IL)

+ : "forward flow" where noise & airflow move in same direction (e.g. supply side)

- : "reverse flow" where noise & airflow move in opposite directions (e.g. return side)

See Silencer Selection Instructions. DIL above 50dB may be limited due to noise flanking around the silencer or along the duct walls. If more than 50dB DIL is required, contact your local Vibro-Acoustics Representative or call **1-800-565-8401**.

Length (in.)	Face Velocity (ft. per min)	Octave Band - Hz/Dynamic Insertion Loss (dB)							
		63	125	250	500	1000	2000	4000	8000
36	- 1250	4	6	13	19	17	16	12	7
	+ 1250	3	5	11	17	16	16	12	7
60	- 1250	8	9	17	23	26	26	15	8
	+ 1250	6	7	15	21	25	27	15	8
84	- 1250	12	12	21	27	35	37	18	9
	+ 1250	9	10	18	24	33	38	18	9
108	- 1250	12	16	32	32	43	42	20	9
	+ 1250	9	14	29	33	44	45	22	11

Pressure Drop (PD)

Pressure drops are reported in accordance with ASTM E477 methods and are based upon **ideal** flow conditions (5 diameters of straight duct on silencer inlet and 10 on outlet). Less than ideal conditions will result in an increase in pressure drop due to System Effects. See Silencer System Effects Data.

Length (in.)	Face Velocity (ft. per min) / Pressure Drop (in.w.g.)						
	500	750	1000	1250	1500	1750	2000
36	0.03	0.06	0.11	0.17	0.25	0.34	0.44
60	0.04	0.09	0.15	0.24	0.34	0.47	0.61
84	0.05	0.10	0.18	0.28	0.41	0.55	0.72
108	0.05	0.12	0.21	0.34	0.48	0.66	0.86

☐ Acceptable (0 - 0.35") ☐ Caution (>0.35") Pressure Drop may be too high for certain applications

Generated Noise (GN)

@ 5 sq.ft. face area

Length (in.)	Face Velocity (ft. per min)	Octave Band - Hz/Generated Noise (dB re 10^{-12} watts)							
		63	125	250	500	1K	2K	4K	8K
All	- 1250	53	51	49	50	51	54	45	33
	- 750	53	42	41	41	43	36	24	24
	+ 750	52	38	37	35	33	29	21	24
	+ 1250	56	52	48	46	45	47	39	31

GN correction chart at right must be used to correct GN to other face areas. →

Face Area (sq.ft.)	2.5	5	10	20	40	80
dB	-3	0	+3	+6	+9	+12

Cross Section Sizes*

"A" dimension (in.)
12.5–13.5
25–27
50–54
75–81
100–108
125–135
150–162
175–189
200–216
225–243

"B" dimension
ANY SIZE

See Rectangular Silencer Cross-Section Dimensions to ensure selection matches ductwork dimensions.

CERTIFIED PERFORMANCE DATA

VIBRO-ACOUSTICS®
A Swegon Group company

RFMB-MV-F4

Rectangular Film MoldBlock
Medium velocity silencer
(<1250 fpm)

How to Specify Example:

47 X **22** **RFMB-MV-F4** X **60**

Duct Width | Duct Height | Silencer Model | Silencer Length

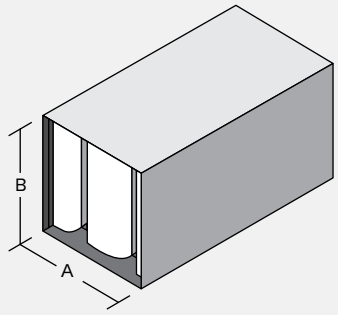

Insertion Loss (IL)

+ : "forward flow" where noise & airflow move in same direction (e.g. supply side)

- : "reverse flow" where noise & airflow move in opposite directions (e.g. return side)

See Silencer Selection Instructions. DIL above 50dB may be limited due to noise flanking around the silencer or along the duct walls. If more than 50dB DIL is required, contact your local Vibro-Acoustics Representative or call **1-800-565-8401**.

Length (in.)	Face Velocity (ft. per min)	Octave Band - Hz/Dynamic Insertion Loss (dB)							
		63	125	250	500	1000	2000	4000	8000
36	- 1250	4	6	12	19	17	16	11	6
	+ 1250	3	5	11	18	17	16	12	6
60	- 1250	8	8	15	24	27	27	14	7
	+ 1250	7	7	13	22	25	28	15	7
84	- 1250	13	11	17	28	37	39	17	8
	+ 1250	10	9	15	25	34	41	18	8
108	- 1250	12	16	30	32	45	43	19	8
	+ 1250	8	14	28	35	46	48	22	10

Pressure Drop (PD)

Pressure drops are reported in accordance with ASTM E477 methods and are based upon **ideal** flow conditions (5 diameters of straight duct on silencer inlet and 10 on outlet). Less than ideal conditions will result in an increase in pressure drop due to System Effects. See Silencer System Effects Data.

Length (in.)	Face Velocity (ft. per min) / Pressure Drop (in.w.g.)						
	500	750	1000	1250	1500	1750	2000
36	0.03	0.06	0.10	0.16	0.23	0.31	0.40
60	0.04	0.08	0.14	0.22	0.32	0.43	0.56
84	0.04	0.09	0.16	0.25	0.36	0.49	0.64
108	0.05	0.11	0.19	0.30	0.43	0.58	0.76

☐ Acceptable (0 - 0.35") ☐ Caution (>0.35") Pressure Drop may be too high for certain applications

Generated Noise (GN)

@ 5 sq.ft. face area

Length (in.)	Face Velocity (ft. per min)	Octave Band - Hz/Generated Noise (dB re 10^{-12} watts)							
		63	125	250	500	1K	2K	4K	8K
All	- 1250	54	51	49	50	51	53	44	33
	- 750	52	41	40	41	42	35	23	24
	+ 750	51	38	37	36	33	28	21	24
	+ 1250	56	52	48	46	46	46	39	31

GN correction chart at right must be used to correct GN to other face areas. →

Face Area (sq.ft.)	2.5	5	10	20	40	80
dB	-3	0	+3	+6	+9	+12

Cross Section Sizes*

"A" dimension (in.)
11.5–12.5
23–25
46–50
69–75
92–100
115–125
138–150
161–175
207–225

"B" dimension
ANY SIZE

See Rectangular Silencer Cross-Section Dimensions to ensure selection matches ductwork dimensions.

CERTIFIED PERFORMANCE DATA

VIBRO-ACOUSTICS®
A Swegon Group company

RFMB-MV-F5

Rectangular Film MoldBlock
Medium velocity silencer
(<1250 fpm)

How to Specify Example:

44 X **22** **RFMB-MV-F5** X **60**

Duct Width	Duct Height	Silencer Model	Silencer Length

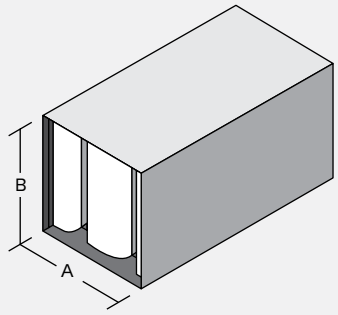

Insertion Loss (IL)

+ : "forward flow" where noise & airflow move in same direction (e.g. supply side)

- : "reverse flow" where noise & airflow move in opposite directions (e.g. return side)

See Silencer Selection Instructions. DIL above 50dB may be limited due to noise flanking around the silencer or along the duct walls. If more than 50dB DIL is required, contact your local Vibro-Acoustics Representative or call **1-800-565-8401**.

Length (in.)	Face Velocity (ft. per min)	Octave Band - Hz/Dynamic Insertion Loss (dB)							
		63	125	250	500	1000	2000	4000	8000
36	- 1250	4	6	12	19	19	17	13	6
	+ 1250	3	4	10	18	18	17	13	6
60	- 1250	8	8	15	24	29	29	17	8
	+ 1250	6	7	13	22	27	30	17	8
84	- 1250	12	11	18	30	39	40	21	9
	+ 1250	9	9	15	27	36	43	22	9
108	- 1250	11	16	29	33	45	43	22	8
	+ 1250	8	13	26	35	46	48	26	11

Pressure Drop (PD)

Pressure drops are reported in accordance with ASTM E477 methods and are based upon **ideal** flow conditions (5 diameters of straight duct on silencer inlet and 10 on outlet). Less than ideal conditions will result in an increase in pressure drop due to System Effects. See Silencer System Effects Data.

Length (in.)	Face Velocity (ft. per min) / Pressure Drop (in.w.g.)						
	500	750	1000	1250	1500	1750	2000
36	0.03	0.06	0.10	0.16	0.23	0.31	0.41
60	0.04	0.08	0.15	0.23	0.33	0.45	0.59
84	0.05	0.10	0.19	0.29	0.42	0.57	0.74
108	0.05	0.11	0.20	0.31	0.45	0.61	0.80

☐ Acceptable (0 - 0.35") ☐ Caution (>0.35") Pressure Drop may be too high for certain applications

Generated Noise (GN)

@ 5 sq.ft. face area

Length (in.)	Face Velocity (ft. per min)	Octave Band - Hz/Generated Noise (dB re 10^{-12} watts)							
		63	125	250	500	1K	2K	4K	8K
All	- 1250	55	51	49	50	50	51	43	33
	- 750	52	41	40	41	41	34	23	24
	+ 750	51	39	37	37	34	28	21	24
	+ 1250	56	52	48	46	46	46	39	32

GN correction chart at right must be used to correct GN to other face areas. →

Face Area (sq.ft.)	2.5	5	10	20	40	80
dB	-3	0	+3	+6	+9	+12

Cross Section Sizes*

"A" dimension (in.)
10.5–11.5
21–23
42–46
63–69
84–92
105–115
126–138
147–161
168–184
189–207

"B" dimension
ANY SIZE

See Rectangular Silencer Cross-Section Dimensions to ensure selection matches ductwork dimensions.

CERTIFIED PERFORMANCE DATA

VIBRO-ACOUSTICS®
A Swegon Group company

RFMB-MV-F6

Rectangular Film MoldBlock
Medium velocity silencer
(<1250 fpm)

How to Specify Example:

40 X **21** **RFMB-MV-F6** X **60**

Duct Width	Duct Height	Silencer Model	Silencer Length

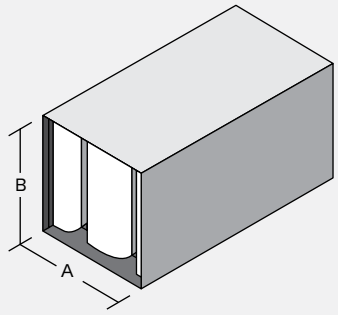

Insertion Loss (IL)

+ : "forward flow" where noise & airflow move in same direction (e.g. supply side)

- : "reverse flow" where noise & airflow move in opposite directions (e.g. return side)

See Silencer Selection Instructions. DIL above 50dB may be limited due to noise flanking around the silencer or along the duct walls. If more than 50dB DIL is required, contact your local Vibro-Acoustics Representative or call **1-800-565-8401**.

Length (in.)	Face Velocity (ft. per min)	Octave Band - Hz/Dynamic Insertion Loss (dB)							
		63	125	250	500	1000	2000	4000	8000
36	- 1250	4	5	11	19	20	19	14	7
	+ 1250	3	4	10	17	20	19	14	7
60	- 1250	8	8	15	25	31	30	19	8
	+ 1250	6	7	13	23	29	31	20	8
84	- 1250	11	11	18	31	41	42	25	10
	+ 1250	9	9	16	28	38	44	27	10
108	- 1250	10	15	27	33	45	43	26	9
	+ 1250	7	12	24	35	47	49	31	12

Pressure Drop (PD)

Pressure drops are reported in accordance with ASTM E477 methods and are based upon **ideal** flow conditions (5 diameters of straight duct on silencer inlet and 10 on outlet). Less than ideal conditions will result in an increase in pressure drop due to System Effects. See Silencer System Effects Data.

Length (in.)	Face Velocity (ft. per min) / Pressure Drop (in.w.g.)						
	500	750	1000	1250	1500	1750	2000
36	0.03	0.06	0.10	0.16	0.23	0.32	0.41
60	0.04	0.09	0.16	0.24	0.35	0.48	0.63
84	0.05	0.12	0.21	0.33	0.47	0.64	0.84
108	0.05	0.12	0.21	0.33	0.47	0.64	0.84

☐ Acceptable (0 - 0.35") ☐ Caution (>0.35") Pressure Drop may be too high for certain applications

Generated Noise (GN)

@ 5 sq.ft. face area

Length (in.)	Face Velocity (ft. per min)	Octave Band - Hz/Generated Noise (dB re 10^{-12} watts)							
		63	125	250	500	1K	2K	4K	8K
All	- 1250	55	52	49	49	50	50	42	34
	- 750	52	41	40	41	40	33	22	24
	+ 750	51	39	37	37	35	28	21	24
	+ 1250	56	52	48	47	46	46	39	32

GN correction chart at right must be used to correct GN to other face areas. →

Face Area (sq.ft.)	2.5	5	10	20	40	80
dB	-3	0	+3	+6	+9	+12

Cross Section Sizes*

"A" dimension (in.)
9.5–10.5
19–21
38–42
57–63
76–84
95–105
114–126
133–147
152–168
171–189

"B" dimension
ANY SIZE

See Rectangular Silencer Cross-Section Dimensions to ensure selection matches ductwork dimensions.

RFMB-MV-F7

Rectangular Film MoldBlock
Medium velocity silencer
(<1250 fpm)

How to Specify Example:

37 X **21** **RFMB-MV-F7** X **60**

Duct Width	Duct Height	Silencer Model	Silencer Length

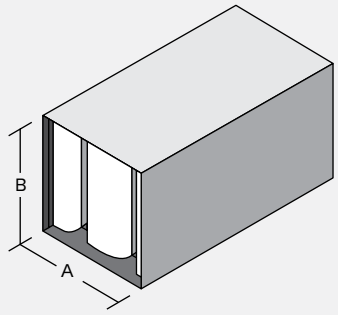

Insertion Loss (IL)

+ : "forward flow" where noise & airflow move in same direction (e.g. supply side)

- : "reverse flow" where noise & airflow move in opposite directions (e.g. return side)

See Silencer Selection Instructions. DIL above 50dB may be limited due to noise flanking around the silencer or along the duct walls. If more than 50dB DIL is required, contact your local Vibro-Acoustics Representative or call **1-800-565-8401**.

Length (in.)	Face Velocity (ft. per min)	Octave Band - Hz/Dynamic Insertion Loss (dB)							
		63	125	250	500	1000	2000	4000	8000
36	- 1250	4	5	11	19	22	20	15	7
	+ 1250	3	4	9	17	21	20	16	7
60	- 1250	7	8	15	26	33	32	22	9
	+ 1250	5	6	13	23	31	33	23	9
84	- 1250	11	11	19	32	43	43	29	10
	+ 1250	8	9	16	29	40	46	31	11
108	- 1250	9	14	26	33	45	43	29	9
	+ 1250	7	11	23	35	47	49	36	13

Pressure Drop (PD)

Pressure drops are reported in accordance with ASTM E477 methods and are based upon **ideal** flow conditions (5 diameters of straight duct on silencer inlet and 10 on outlet). Less than ideal conditions will result in an increase in pressure drop due to System Effects. See Silencer System Effects Data.

Length (in.)	Face Velocity (ft. per min) / Pressure Drop (in.w.g.)						
	500	750	1000	1250	1500	1750	2000
36	0.03	0.06	0.11	0.16	0.24	0.32	0.42
60	0.04	0.09	0.17	0.26	0.37	0.51	0.66
84	0.06	0.13	0.24	0.37	0.53	0.72	0.94
108	0.05	0.12	0.22	0.34	0.49	0.67	0.88

☐ Acceptable (0 - 0.35") ☐ Caution (>0.35") Pressure Drop may be too high for certain applications

Generated Noise (GN)

@ 5 sq.ft. face area

Length (in.)	Face Velocity (ft. per min)	Octave Band - Hz/Generated Noise (dB re 10^{-12} watts)							
		63	125	250	500	1K	2K	4K	8K
All	- 1250	55	52	49	49	49	49	41	34
	- 750	51	41	39	41	39	32	22	24
	+ 750	51	39	37	38	35	28	21	24
	+ 1250	56	51	48	47	46	46	39	33

GN correction chart at right must be used to correct GN to other face areas. →

Face Area (sq.ft.)	2.5	5	10	20	40	80
dB	-3	0	+3	+6	+9	+12

Cross Section Sizes*

"A" dimension (in.)
8.25–9.5
16.5–19
33–38
49.5–57
66–76
82.5–95
99–114
115.5–133
132–152
148.5–171

"B" dimension
ANY SIZE

See Rectangular Silencer Cross-Section Dimensions to ensure selection matches ductwork dimensions.

CERTIFIED PERFORMANCE DATA

VIBRO-ACOUSTICS®
A Swegon Group company

RFMB-MV-F8

Rectangular Film MoldBlock
Medium velocity silencer
(<1250 fpm)

How to Specify Example:

14 X **22** **RFMB-MV-F8** X **60**

Duct Width	Duct Height	Silencer Model	Silencer Length

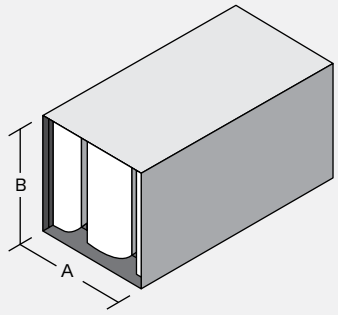

Insertion Loss (IL)

+ : "forward flow" where noise & airflow move in same direction (e.g. supply side)

- : "reverse flow" where noise & airflow move in opposite directions (e.g. return side)

See Silencer Selection Instructions. DIL above 50dB may be limited due to noise flanking around the silencer or along the duct walls. If more than 50dB DIL is required, contact your local Vibro-Acoustics Representative or call **1-800-565-8401**.

Length (in.)	Face Velocity (ft. per min)	Octave Band - Hz/Dynamic Insertion Loss (dB)							
		63	125	250	500	1000	2000	4000	8000
36	- 1250	4	6	10	17	20	21	20	12
	+ 1250	3	4	8	16	19	20	21	11
60	- 1250	5	8	14	25	32	29	25	11
	+ 1250	4	6	12	23	31	31	27	11
84	- 1250	7	10	19	33	44	38	30	11
	+ 1250	5	8	16	31	43	41	33	12
108	- 1250	9	12	24	39	49	48	36	12
	+ 1250	6	10	20	39	49	52	40	14

Pressure Drop (PD)

Pressure drops are reported in accordance with ASTM E477 methods and are based upon **ideal** flow conditions (5 diameters of straight duct on silencer inlet and 10 on outlet). Less than ideal conditions will result in an increase in pressure drop due to System Effects. See Silencer System Effects Data.

Length (in.)	Face Velocity (ft. per min) / Pressure Drop (in.w.g.)						
	500	750	1000	1250	1500	1750	2000
36	0.04	0.09	0.16	0.24	0.35	0.47	0.62
60	0.05	0.12	0.21	0.33	0.47	0.64	0.83
84	0.07	0.15	0.26	0.41	0.59	0.80	1.05
108	0.08	0.18	0.32	0.49	0.71	0.97	1.26

☐ Acceptable (0 - 0.35") ☐ Caution (>0.35") Pressure Drop may be too high for certain applications

Generated Noise (GN)

@ 5 sq.ft. face area

Length (in.)	Face Velocity (ft. per min)	Octave Band - Hz/Generated Noise (dB re 10^{-12} watts)							
		63	125	250	500	1K	2K	4K	8K
All	- 1250	55	52	49	49	49	49	41	34
	- 750	51	41	49	41	39	32	22	24
	+ 750	51	39	37	38	35	28	21	24
	+ 1250	56	52	48	47	46	46	39	33

GN correction chart at right must be used to correct GN to other face areas. →

Face Area (sq.ft.)	2.5	5	10	20	40	80
dB	-3	0	+3	+6	+9	+12

Cross Section Sizes*

"A" dimension (in.)
6.75–8.25
13.5–16.5
27–33
40.5–49.5
54–66
67.5–82.5
81–99
94.5–115.5
108–132
121.5–148.5

"B" dimension
ANY SIZE

See Rectangular Silencer Cross-Section Dimensions to ensure selection matches ductwork dimensions.

RFMB-MV-F9

Rectangular Film MoldBlock
Medium velocity silencer
(<1250 fpm)

How to Specify Example:

21 X **21** **RFMB-MV-F9** X **60**

Duct Width	Duct Height	Silencer Model	Silencer Length

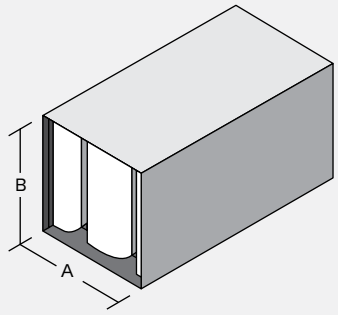

Insertion Loss (IL)

+ : "forward flow" where noise & airflow move in same direction (e.g. supply side)

- : "reverse flow" where noise & airflow move in opposite directions (e.g. return side)

See Silencer Selection Instructions. DIL above 50dB may be limited due to noise flanking around the silencer or along the duct walls. If more than 50dB DIL is required, contact your local Vibro-Acoustics Representative or call **1-800-565-8401**.

Length (in.)	Face Velocity (ft. per min)	Octave Band - Hz/Dynamic Insertion Loss (dB)							
		63	125	250	500	1000	2000	4000	8000
36	- 1250	4	4	9	18	26	24	18	8
	+ 1250	3	3	8	16	25	24	20	9
60	- 1250	7	8	15	27	38	36	30	10
	+ 1250	4	6	12	25	36	37	32	11
84	- 1250	9	11	20	36	50	47	42	13
	+ 1250	6	9	17	33	47	50	44	13
108	- 1250	7	11	21	34	45	44	40	10
	+ 1250	5	9	18	36	49	50	50	15

Pressure Drop (PD)

Pressure drops are reported in accordance with ASTM E477 methods and are based upon **ideal** flow conditions (5 diameters of straight duct on silencer inlet and 10 on outlet). Less than ideal conditions will result in an increase in pressure drop due to System Effects. See Silencer System Effects Data.

Length (in.)	Face Velocity (ft. per min) / Pressure Drop (in.w.g.)						
	500	750	1000	1250	1500	1750	2000
36	0.03	0.06	0.11	0.17	0.25	0.34	0.44
60	0.05	0.11	0.19	0.30	0.43	0.58	0.76
84	0.08	0.17	0.31	0.48	0.70	0.95	1.24
108	0.06	0.14	0.25	0.39	0.56	0.77	1.00

☐ Acceptable (0 - 0.35") ☐ Caution (>0.35") Pressure Drop may be too high for certain applications

Generated Noise (GN)

@ 5 sq.ft. face area

Length (in.)	Face Velocity (ft. per min)	Octave Band - Hz/Generated Noise (dB re 10^{-12} watts)							
		63	125	250	500	1K	2K	4K	8K
All	- 1250	57	53	48	48	47	45	39	35
	- 750	50	40	38	41	37	28	21	24
	+ 750	50	40	38	41	37	28	21	24
	+ 1250	57	53	48	48	47	45	39	35

GN correction chart at right must be used to correct GN to other face areas. →

Face Area (sq.ft.)	2.5	5	10	20	40	80
dB	-3	0	+3	+6	+9	+12

Cross Section Sizes*

"A" dimension (in.)
5–6.75
10–13.5
20–27
30–40.5
40–54
50–67.5
60–81
70–94.5
80–108
90–121.5

"B" dimension
ANY SIZE

See Rectangular Silencer Cross-Section Dimensions to ensure selection matches ductwork dimensions.

CERTIFIED PERFORMANCE DATA

VIBRO-ACOUSTICS®
A Swegon Group company

RFMB-HV-F1

Rectangular Film MoldBlock
High velocity silencer
(<2000 fpm)

How to Specify Example:

32 X **21** **RFMB-HV-F1** X **60**

Duct Width	Duct Height	Silencer Model	Silencer Length

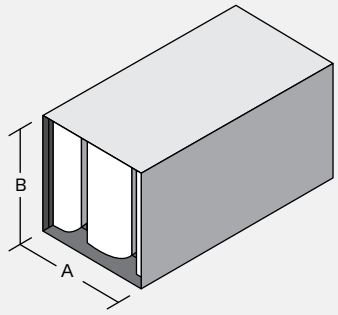

Insertion Loss (IL)

+ : "forward flow" where noise & airflow move in same direction (e.g. supply side)

- : "reverse flow" where noise & airflow move in opposite directions (e.g. return side)

See Silencer Selection Instructions. DIL above 50dB may be limited due to noise flanking around the silencer or along the duct walls. If more than 50dB DIL is required, contact your local Vibro-Acoustics Representative or call **1-800-565-8401**.

Length (in.)	Face Velocity (ft. per min)	Octave Band - Hz/Dynamic Insertion Loss (dB)							
		63	125	250	500	1000	2000	4000	8000
36	- 2000	2	5	10	12	12	13	13	8
	+ 2000	2	3	8	11	11	11	11	6
60	- 2000	5	7	11	14	18	19	13	8
	+ 2000	4	5	10	13	17	17	13	7
84	- 2000	8	9	13	16	24	24	14	8
	+ 2000	7	6	11	14	24	23	15	8
108	- 2000	10	11	16	20	29	28	16	8
	+ 2000	8	8	14	18	29	27	17	9

Pressure Drop (PD)

Pressure drops are reported in accordance with ASTM E477 methods and are based upon **ideal** flow conditions (5 diameters of straight duct on silencer inlet and 10 on outlet). Less than ideal conditions will result in an increase in pressure drop due to System Effects. See Silencer System Effects Data.

Length (in.)	Face Velocity (ft. per min) / Pressure Drop (in.w.g.)						
	500	1000	1500	1750	2000	2250	2500
36	0.01	0.04	0.09	0.12	0.16	0.20	0.25
60	0.01	0.05	0.12	0.17	0.22	0.28	0.34
84	0.02	0.07	0.16	0.21	0.28	0.35	0.44
108	0.02	0.09	0.19	0.26	0.34	0.43	0.53

☐ Acceptable (0 - 0.35") ☐ Caution (>0.35") Pressure Drop may be too high for certain applications

Generated Noise (GN)

@ 5 sq.ft. face area

Length (in.)	Face Velocity (ft. per min)	Octave Band - Hz/Generated Noise (dB re 10^{-12} watts)							
		63	125	250	500	1K	2K	4K	8K
All	- 2000	58	54	54	53	54	55	47	38
	- 1250	54	49	47	47	47	44	33	26
	+ 1250	58	47	42	43	42	39	28	25
	+ 2000	60	56	52	52	51	53	46	36

GN correction chart at right must be used to correct GN to other face areas. →

Face Area (sq.ft.)	2.5	5	10	20	40	80
dB	-3	0	+3	+6	+9	+12

Cross Section Sizes*

"A" dimension (in.)
14.5–15.5
29–31
58–62
87–93
116–124
145–155
174–186
203–217
232–248

"B" dimension
ANY SIZE

See Rectangular Silencer Cross-Section Dimensions to ensure selection matches ductwork dimensions.

CERTIFIED PERFORMANCE DATA

VIBRO-ACOUSTICS®
A Swegon Group company

RFMB-HV-F2

Rectangular Film MoldBlock
High velocity silencer
(<2000 fpm)

How to Specify Example:

27 X **22** **RFMB-HV-F2** X **60**

Duct Width	Duct Height	Silencer Model	Silencer Length

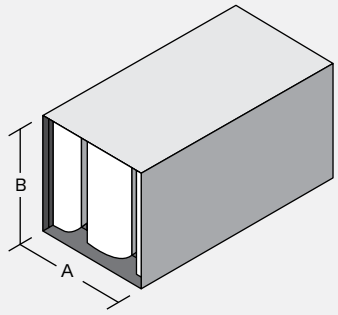

Insertion Loss (IL)

+ : "forward flow" where noise & airflow move in same direction (e.g. supply side)

- : "reverse flow" where noise & airflow move in opposite directions (e.g. return side)

See Silencer Selection Instructions. DIL above 50dB may be limited due to noise flanking around the silencer or along the duct walls. If more than 50dB DIL is required, contact your local Vibro-Acoustics Representative or call **1-800-565-8401**.

Length (in.)	Face Velocity (ft. per min)	Octave Band - Hz/Dynamic Insertion Loss (dB)							
		63	125	250	500	1000	2000	4000	8000
36	- 2000	3	5	9	13	13	12	11	7
	+ 2000	1	3	8	11	12	11	10	6
60	- 2000	6	6	10	15	19	19	13	7
	+ 2000	4	4	9	13	18	18	12	6
84	- 2000	9	8	12	17	26	25	14	7
	+ 2000	7	6	10	15	25	25	14	7
108	- 2000	10	10	15	22	32	29	15	8
	+ 2000	7	8	14	20	32	29	16	8

Pressure Drop (PD)

Pressure drops are reported in accordance with ASTM E477 methods and are based upon **ideal** flow conditions (5 diameters of straight duct on silencer inlet and 10 on outlet). Less than ideal conditions will result in an increase in pressure drop due to System Effects. See Silencer System Effects Data.

Length (in.)	Face Velocity (ft. per min) / Pressure Drop (in.w.g.)						
	500	1000	1500	1750	2000	2250	2500
36	0.01	0.04	0.09	0.12	0.16	0.20	0.25
60	0.01	0.05	0.12	0.16	0.21	0.27	0.33
84	0.02	0.07	0.16	0.21	0.28	0.35	0.44
108	0.02	0.08	0.18	0.24	0.32	0.40	0.50

☐ Acceptable (0 - 0.35") ☐ Caution (>0.35") Pressure Drop may be too high for certain applications

Generated Noise (GN)

@ 5 sq.ft. face area

Length (in.)	Face Velocity (ft. per min)	Octave Band - Hz/Generated Noise (dB re 10^{-12} watts)							
		63	125	250	500	1K	2K	4K	8K
All	- 2000	58	55	54	54	55	56	47	38
	- 1250	53	50	47	48	47	44	33	26
	+ 1250	57	48	42	43	42	39	28	25
	+ 2000	60	57	53	52	51	53	47	37

GN correction chart at right must be used to correct GN to other face areas. →

Face Area (sq.ft.)	2.5	5	10	20	40	80
dB	-3	0	+3	+6	+9	+12

Cross Section Sizes*

"A" dimension (in.)
13.5–14.5
27–29
54–58
81–87
108–116
135–145
162–174
189–203
216–232

"B" dimension
ANY SIZE

See Rectangular Silencer Cross-Section Dimensions to ensure selection matches ductwork dimensions.

CERTIFIED PERFORMANCE DATA

VIBRO-ACOUSTICS®
A Swegon Group company

RFMB-HV-F3

Rectangular Film MoldBlock
High velocity silencer
(<2000 fpm)

How to Specify Example:

25 X **21** **RFMB-HV-F3** X **60**

Duct Width	Duct Height	Silencer Model	Silencer Length

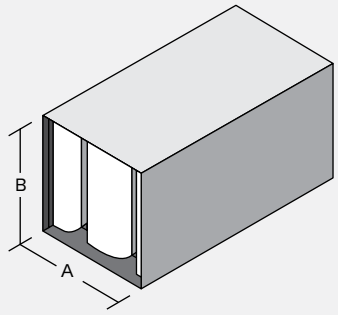

Insertion Loss (IL)

+ : "forward flow" where noise & airflow move in same direction (e.g. supply side)

- : "reverse flow" where noise & airflow move in opposite directions (e.g. return side)

See Silencer Selection Instructions. DIL above 50dB may be limited due to noise flanking around the silencer or along the duct walls. If more than 50dB DIL is required, contact your local Vibro-Acoustics Representative or call **1-800-565-8401**.

Length (in.)	Face Velocity (ft. per min)	Octave Band - Hz/Dynamic Insertion Loss (dB)							
		63	125	250	500	1000	2000	4000	8000
36	- 2000	3	4	9	13	13	12	10	6
	+ 2000	1	3	7	12	13	11	9	5
60	- 2000	7	6	10	15	21	19	12	6
	+ 2000	4	4	8	14	19	19	12	6
84	- 2000	10	8	11	17	28	26	14	7
	+ 2000	7	6	9	15	26	28	14	6
108	- 2000	9	10	15	24	35	31	15	7
	+ 2000	6	8	13	22	35	32	15	8

Pressure Drop (PD)

Pressure drops are reported in accordance with ASTM E477 methods and are based upon **ideal** flow conditions (5 diameters of straight duct on silencer inlet and 10 on outlet). Less than ideal conditions will result in an increase in pressure drop due to System Effects. See Silencer System Effects Data.

Length (in.)	Face Velocity (ft. per min) / Pressure Drop (in.w.g.)						
	500	1000	1500	1750	2000	2250	2500
36	0.01	0.04	0.09	0.12	0.16	0.20	0.25
60	0.01	0.05	0.12	0.16	0.21	0.26	0.32
84	0.02	0.07	0.16	0.21	0.28	0.35	0.44
108	0.02	0.08	0.17	0.23	0.30	0.38	0.47

☐ Acceptable (0 - 0.35") ☐ Caution (>0.35") Pressure Drop may be too high for certain applications

Generated Noise (GN)

@ 5 sq.ft. face area

Length (in.)	Face Velocity (ft. per min)	Octave Band - Hz/Generated Noise (dB re 10^{-12} watts)							
		63	125	250	500	1K	2K	4K	8K
All	- 2000	57	55	55	54	55	56	48	38
	- 1250	53	50	47	48	48	44	33	25
	+ 1250	57	49	43	43	42	40	29	25
	+ 2000	59	58	54	52	51	53	47	38

GN correction chart at right must be used to correct GN to other face areas. →

Face Area (sq.ft.)	2.5	5	10	20	40	80
dB	-3	0	+3	+6	+9	+12

Cross Section Sizes*

"A" dimension (in.)
12.5–13.5
25–27
50–54
75–81
100–108
125–135
150–162
175–189
200–216
225–243

"B" dimension
ANY SIZE

See Rectangular Silencer Cross-Section Dimensions to ensure selection matches ductwork dimensions.

RFMB-HV-F4

Rectangular Film MoldBlock
High velocity silencer
(<2000 fpm)

How to Specify Example:

47 X **22** **RFMB-HV-F4** X **60**

Duct Width	Duct Height	Silencer Model	Silencer Length

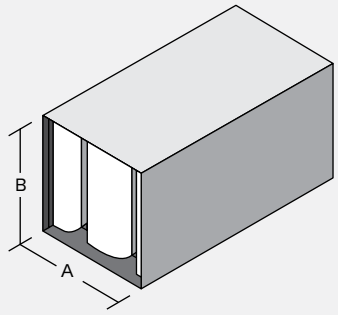

Insertion Loss (IL)

+ : "forward flow" where noise & airflow move in same direction (e.g. supply side)

- : "reverse flow" where noise & airflow move in opposite directions (e.g. return side)

See Silencer Selection Instructions. DIL above 50dB may be limited due to noise flanking around the silencer or along the duct walls. If more than 50dB DIL is required, contact your local Vibro-Acoustics Representative or call **1-800-565-8401**.

Length (in.)	Face Velocity (ft. per min)	Octave Band - Hz/Dynamic Insertion Loss (dB)							
		63	125	250	500	1000	2000	4000	8000
36	- 2000	3	4	8	13	14	11	9	5
	+ 2000	1	3	7	12	13	11	8	4
60	- 2000	7	6	9	16	22	19	11	6
	+ 2000	4	4	7	14	20	21	11	5
84	- 2000	11	7	10	18	31	27	14	7
	+ 2000	8	5	8	16	27	30	13	6
108	- 2000	8	10	15	26	37	32	14	6
	+ 2000	5	8	13	24	38	34	14	7

Pressure Drop (PD)

Pressure drops are reported in accordance with ASTM E477 methods and are based upon **ideal** flow conditions (5 diameters of straight duct on silencer inlet and 10 on outlet). Less than ideal conditions will result in an increase in pressure drop due to System Effects. See Silencer System Effects Data.

Length (in.)	Face Velocity (ft. per min) / Pressure Drop (in.w.g.)						
	500	1000	1500	1750	2000	2250	2500
36	0.01	0.04	0.09	0.12	0.16	0.20	0.25
60	0.01	0.05	0.11	0.15	0.20	0.25	0.31
84	0.02	0.07	0.16	0.21	0.28	0.35	0.44
108	0.02	0.07	0.16	0.21	0.28	0.34	0.44

☐ Acceptable (0 - 0.35") ☐ Caution (>0.35") Pressure Drop may be too high for certain applications

Generated Noise (GN)

@ 5 sq.ft. face area

Length (in.)	Face Velocity (ft. per min)	Octave Band - Hz/Generated Noise (dB re 10^{-12} watts)							
		63	125	250	500	1K	2K	4K	8K
All	- 2000	56	56	55	54	55	56	48	37
	- 1250	53	50	47	48	48	44	32	25
	+ 1250	56	49	44	43	42	40	29	25
	+ 2000	59	59	54	52	51	54	48	39

GN correction chart at right must be used to correct GN to other face areas. →

Face Area (sq.ft.)	2.5	5	10	20	40	80
dB	-3	0	+3	+6	+9	+12

Cross Section Sizes*

"A" dimension (in.)
11.5–12.5
23–25
46–50
69–75
92–100
115–125
138–150
161–175
207–225

"B" dimension
ANY SIZE

See Rectangular Silencer Cross-Section Dimensions to ensure selection matches ductwork dimensions.

CERTIFIED PERFORMANCE DATA

VIBRO-ACOUSTICS®
A Swegon Group company

RFMB-HV-F5

Rectangular Film MoldBlock
High velocity silencer
(<2000 fpm)

How to Specify Example:

44 X **22** **RFMB-HV-F5** X **60**

Duct Width	Duct Height	Silencer Model	Silencer Length

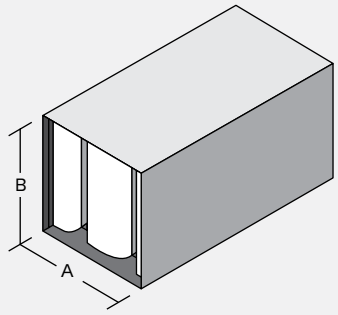

Insertion Loss (IL)

+ : "forward flow" where noise & airflow move in same direction (e.g. supply side)

- : "reverse flow" where noise & airflow move in opposite directions (e.g. return side)

See Silencer Selection Instructions. DIL above 50dB may be limited due to noise flanking around the silencer or along the duct walls. If more than 50dB DIL is required, contact your local Vibro-Acoustics Representative or call **1-800-565-8401**.

Length (in.)	Face Velocity (ft. per min)	Octave Band - Hz/Dynamic Insertion Loss (dB)							
		63	125	250	500	1000	2000	4000	8000
36	- 2000	3	4	8	13	15	14	10	5
	+ 2000	1	3	7	11	14	14	10	4
60	- 2000	7	6	9	16	24	22	13	6
	+ 2000	4	4	7	14	21	23	13	5
84	- 2000	11	7	10	20	32	30	16	7
	+ 2000	7	5	8	17	28	32	16	6
108	- 2000	8	10	15	27	38	34	16	6
	+ 2000	4	7	13	24	39	37	17	6

Pressure Drop (PD)

Pressure drops are reported in accordance with ASTM E477 methods and are based upon **ideal** flow conditions (5 diameters of straight duct on silencer inlet and 10 on outlet). Less than ideal conditions will result in an increase in pressure drop due to System Effects. See Silencer System Effects Data.

Length (in.)	Face Velocity (ft. per min) / Pressure Drop (in.w.g.)						
	500	1000	1500	1750	2000	2250	2500
36	0.01	0.04	0.09	0.12	0.16	0.20	0.25
60	0.01	0.05	0.12	0.16	0.21	0.26	0.32
84	0.02	0.08	0.17	0.23	0.31	0.39	0.48
108	0.02	0.07	0.16	0.22	0.29	0.37	0.46

☐ Acceptable (0 - 0.35") ☐ Caution (>0.35") Pressure Drop may be too high for certain applications

Cross Section Sizes*

"A" dimension (in.)
10.5–11.5
21–23
42–46
63–69
84–92
105–115
126–138
147–161
168–184
189–207

"B" dimension
ANY SIZE

See Rectangular Silencer Cross-Section Dimensions to ensure selection matches ductwork dimensions.

Generated Noise (GN)

@ 5 sq.ft. face area

Length (in.)	Face Velocity (ft. per min)	Octave Band - Hz/Generated Noise (dB re 10^{-12} watts)							
		63	125	250	500	1K	2K	4K	8K
All	- 2000	56	56	55	55	55	57	49	39
	- 1250	53	50	47	48	48	45	33	25
	+ 1250	56	49	44	44	43	40	29	25
	+ 2000	59	59	54	53	52	53	48	40

GN correction chart at right must be used to correct GN to other face areas. →

Face Area (sq.ft.)	2.5	5	10	20	40	80
dB	-3	0	+3	+6	+9	+12

CERTIFIED PERFORMANCE DATA

VIBRO-ACOUSTICS®
A Swegon Group company

RFMB-HV-F6

Rectangular Film MoldBlock
High velocity silencer
(<2000 fpm)

How to Specify Example:

40 X **21** **RFMB-HV-F6** X **60**

Duct Width	Duct Height	Silencer Model	Silencer Length

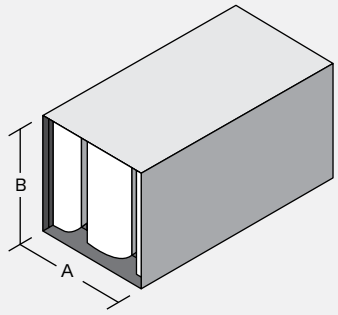

Insertion Loss (IL)

+ : "forward flow" where noise & airflow move in same direction (e.g. supply side)

- : "reverse flow" where noise & airflow move in opposite directions (e.g. return side)

See Silencer Selection Instructions. DIL above 50dB may be limited due to noise flanking around the silencer or along the duct walls. If more than 50dB DIL is required, contact your local Vibro-Acoustics Representative or call **1-800-565-8401**.

Length (in.)	Face Velocity (ft. per min)	Octave Band - Hz/Dynamic Insertion Loss (dB)							
		63	125	250	500	1000	2000	4000	8000
36	- 2000	3	4	7	12	15	16	11	5
	+ 2000	1	3	6	11	14	16	11	4
60	- 2000	7	6	9	16	25	24	15	6
	+ 2000	4	4	7	15	22	26	14	6
84	- 2000	10	7	11	21	34	32	18	8
	+ 2000	7	6	9	18	30	35	18	7
108	- 2000	7	10	15	27	39	36	18	7
	+ 2000	4	7	12	24	29	39	20	8

Pressure Drop (PD)

Pressure drops are reported in accordance with ASTM E477 methods and are based upon **ideal** flow conditions (5 diameters of straight duct on silencer inlet and 10 on outlet). Less than ideal conditions will result in an increase in pressure drop due to System Effects. See Silencer System Effects Data.

Length (in.)	Face Velocity (ft. per min) / Pressure Drop (in.w.g.)						
	500	1000	1500	1750	2000	2250	2500
36	0.01	0.04	0.09	0.12	0.16	0.20	0.25
60	0.01	0.05	0.12	0.16	0.21	0.27	0.33
84	0.02	0.08	0.19	0.26	0.33	0.42	0.52
108	0.02	0.08	0.17	0.23	0.31	0.39	0.48

☐ Acceptable (0 - 0.35") ☐ Caution (>0.35") Pressure Drop may be too high for certain applications

Generated Noise (GN)

@ 5 sq.ft. face area

Length (in.)	Face Velocity (ft. per min)	Octave Band - Hz/Generated Noise (dB re 10^{-12} watts)							
		63	125	250	500	1K	2K	4K	8K
All	- 2000	56	55	56	55	55	58	50	40
	- 1250	52	50	47	48	49	46	34	26
	+ 1250	56	49	44	44	43	39	29	25
	+ 2000	59	58	55	53	52	53	48	41

GN correction chart at right must be used to correct GN to other face areas. →

Face Area (sq.ft.)	2.5	5	10	20	40	80
dB	-3	0	+3	+6	+9	+12

Cross Section Sizes*

"A" dimension (in.)
9.5–10.5
19–21
38–42
57–63
76–84
95–105
114–126
133–147
152–168
171–189

"B" dimension
ANY SIZE

See Rectangular Silencer Cross-Section Dimensions to ensure selection matches ductwork dimensions.

CERTIFIED PERFORMANCE DATA

VIBRO-ACOUSTICS®
A Swegon Group company

RFMB-HV-F7

Rectangular Film MoldBlock
High velocity silencer
(<2000 fpm)

How to Specify Example:

37 X **21** **RFMB-HV-F7** X **60**

Duct Width	Duct Height	Silencer Model	Silencer Length

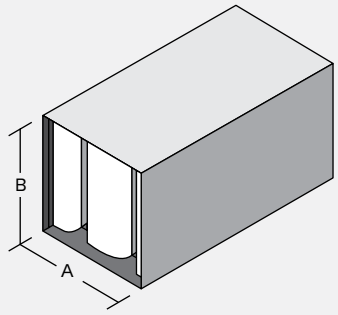

Insertion Loss (IL)

+ : "forward flow" where noise & airflow move in same direction (e.g. supply side)

- : "reverse flow" where noise & airflow move in opposite directions (e.g. return side)

See Silencer Selection Instructions. DIL above 50dB may be limited due to noise flanking around the silencer or along the duct walls. If more than 50dB DIL is required, contact your local Vibro-Acoustics Representative or call **1-800-565-8401**.

Length (in.)	Face Velocity (ft. per min)	Octave Band - Hz/Dynamic Insertion Loss (dB)							
		63	125	250	500	1000	2000	4000	8000
36	- 2000	3	4	7	12	16	19	12	5
	+ 2000	1	3	6	10	15	18	12	4
60	- 2000	6	6	9	17	26	27	16	7
	+ 2000	4	4	7	15	23	28	16	6
84	- 2000	10	8	12	22	36	35	20	8
	+ 2000	6	6	9	19	32	38	21	7
108	- 2000	7	9	15	27	39	38	19	7
	+ 2000	4	7	12	25	40	41	22	9

Pressure Drop (PD)

Pressure drops are reported in accordance with ASTM E477 methods and are based upon **ideal** flow conditions (5 diameters of straight duct on silencer inlet and 10 on outlet). Less than ideal conditions will result in an increase in pressure drop due to System Effects. See Silencer System Effects Data.

Length (in.)	Face Velocity (ft. per min) / Pressure Drop (in.w.g.)						
	500	1000	1500	1750	2000	2250	2500
36	0.01	0.04	0.09	0.12	0.16	0.20	0.25
60	0.01	0.06	0.12	0.17	0.22	0.28	0.34
84	0.02	0.09	0.20	0.28	0.36	0.46	0.56
108	0.02	0.08	0.18	0.24	0.32	0.40	0.50

☐ Acceptable (0 - 0.35") ☐ Caution (>0.35") Pressure Drop may be too high for certain applications

Generated Noise (GN)

@ 5 sq.ft. face area

Length (in.)	Face Velocity (ft. per min)	Octave Band - Hz/Generated Noise (dB re 10^{-12} watts)							
		63	125	250	500	1K	2K	4K	8K
All	- 2000	56	55	56	55	56	58	52	41
	- 1250	52	50	46	48	49	47	35	26
	+ 1250	56	49	44	45	44	39	29	25
	+ 2000	59	58	55	54	53	53	48	42

GN correction chart at right must be used to correct GN to other face areas. →

Face Area (sq.ft.)	2.5	5	10	20	40	80
dB	-3	0	+3	+6	+9	+12

Cross Section Sizes*

"A" dimension (in.)
8.25–9.5
16.5–19
33–38
49.5–57
66–76
82.5–95
99–114
115.5–133
132–152
148.5–171

"B" dimension
ANY SIZE

See Rectangular Silencer Cross-Section Dimensions to ensure selection matches ductwork dimensions.

RFMB-HV-F8

Rectangular Film MoldBlock
High velocity silencer
(<2000 fpm)

How to Specify Example:

14 X **22** **RFMB-HV-F8** X **60**

Duct Width	Duct Height	Silencer Model	Silencer Length

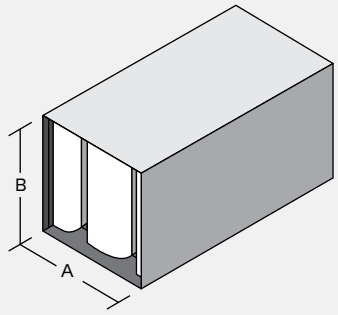

Insertion Loss (IL)

+ : "forward flow" where noise & airflow move in same direction (e.g. supply side)

- : "reverse flow" where noise & airflow move in opposite directions (e.g. return side)

See Silencer Selection Instructions. DIL above 50dB may be limited due to noise flanking around the silencer or along the duct walls. If more than 50dB DIL is required, contact your local Vibro-Acoustics Representative or call **1-800-565-8401**.

Length (in.)	Face Velocity (ft. per min)	Octave Band - Hz/Dynamic Insertion Loss (dB)							
		63	125	250	500	1000	2000	4000	8000
36	- 2000	2	4	7	11	14	21	17	8
	+ 2000	1	3	5	9	14	20	17	8
60	- 2000	5	5	10	17	25	24	18	8
	+ 2000	3	4	8	15	24	26	19	8
84	- 2000	7	6	13	24	35	28	18	8
	+ 2000	5	5	11	22	34	31	21	9
108	- 2000	9	8	17	31	42	35	21	9
	+ 2000	7	6	14	28	42	39	25	10

Pressure Drop (PD)

Pressure drops are reported in accordance with ASTM E477 methods and are based upon **ideal** flow conditions (5 diameters of straight duct on silencer inlet and 10 on outlet). Less than ideal conditions will result in an increase in pressure drop due to System Effects. See Silencer System Effects Data.

Length (in.)	Face Velocity (ft. per min) / Pressure Drop (in.w.g.)						
	500	1000	1500	1750	2000	2250	2500
36	0.01	0.05	0.10	0.14	0.18	0.23	0.28
60	0.02	0.07	0.15	0.21	0.27	0.34	0.42
84	0.02	0.09	0.20	0.28	0.36	0.46	0.56
108	0.03	0.11	0.25	0.34	0.45	0.57	0.70

☐ Acceptable (0 - 0.35") ☐ Caution (>0.35") Pressure Drop may be too high for certain applications

Generated Noise (GN)

@ 5 sq.ft. face area

Length (in.)	Face Velocity (ft. per min)	Octave Band - Hz/Generated Noise (dB re 10^{-12} watts)							
		63	125	250	500	1K	2K	4K	8K
All	- 2000	58	55	56	56	57	58	53	45
	- 1250	53	47	47	49	48	46	35	28
	+ 1250	57	4	43	46	45	36	27	26
	+ 2000	60	57	54	55	55	51	46	40

GN correction chart at right must be used to correct GN to other face areas. →

Face Area (sq.ft.)	2.5	5	10	20	40	80
dB	-3	0	+3	+6	+9	+12

Cross Section Sizes*

"A" dimension (in.)
6.75–8.25
13.5–16.5
27–33
40.5–49.5
54–66
67.5–82.5
81–99
94.5–115.5
108–132
121.5–148.5

"B" dimension
ANY SIZE

See Rectangular Silencer Cross-Section Dimensions to ensure selection matches ductwork dimensions.

RFMB-HV-F9

Rectangular Film MoldBlock
High velocity silencer
(<2000 fpm)

How to Specify Example:

21 X **21** **RFMB-HV-F9** X **60**

Duct Width	Duct Height	Silencer Model	Silencer Length

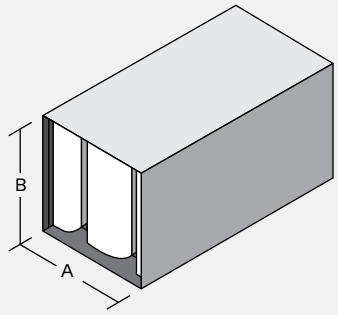

Insertion Loss (IL)

+ : "forward flow" where noise & airflow move in same direction (e.g. supply side)

- : "reverse flow" where noise & airflow move in opposite directions (e.g. return side)

See Silencer Selection Instructions. DIL above 50dB may be limited due to noise flanking around the silencer or along the duct walls. If more than 50dB DIL is required, contact your local Vibro-Acoustics Representative or call **1-800-565-8401**.

Length (in.)	Face Velocity (ft. per min)	Octave Band - Hz/Dynamic Insertion Loss (dB)							
		63	125	250	500	1000	2000	4000	8000
36	- 2000	2	4	6	10	18	26	15	6
	+ 2000	1	3	4	8	16	25	15	5
60	- 2000	5	6	10	18	29	35	21	8
	+ 2000	3	4	7	15	26	35	21	7
84	- 2000	8	8	14	26	41	44	27	10
	+ 2000	5	6	10	22	36	45	28	9
108	- 2000	6	8	15	29	41	44	25	8
	+ 2000	4	6	11	25	42	48	30	10

Pressure Drop (PD)

Pressure drops are reported in accordance with ASTM E477 methods and are based upon **ideal** flow conditions (5 diameters of straight duct on silencer inlet and 10 on outlet). Less than ideal conditions will result in an increase in pressure drop due to System Effects. See Silencer System Effects Data.

Length (in.)	Face Velocity (ft. per min) / Pressure Drop (in.w.g.)						
	500	1000	1500	1750	2000	2250	2500
36	0.01	0.04	0.09	0.12	0.16	0.20	0.25
60	0.02	0.06	0.13	0.18	0.24	0.30	0.37
84	0.03	0.11	0.25	0.34	0.44	0.56	0.69
108	0.02	0.09	0.20	0.28	0.36	0.46	0.56

☐ Acceptable (0 - 0.35") ☐ Caution (>0.35") Pressure Drop may be too high for certain applications

Generated Noise (GN)

@ 5 sq.ft. face area

Length (in.)	Face Velocity (ft. per min)	Octave Band - Hz/Generated Noise (dB re 10^{-12} watts)							
		63	125	250	500	1K	2K	4K	8K
All	- 2000	56	55	57	55	56	60	55	45
	- 1250	52	49	45	48	50	49	38	27
	+ 1250	56	48	43	46	45	38	29	26
	+ 2000	59	58	55	55	54	52	48	44

GN correction chart at right must be used to correct GN to other face areas. →

Face Area (sq.ft.)	2.5	5	10	20	40	80
dB	-3	0	+3	+6	+9	+12

Cross Section Sizes*

"A" dimension (in.)
5–6.75
10–13.5
20–27
30–40.5
40–54
50–67.5
60–81
70–94.5
80–108
90–121.5

"B" dimension
ANY SIZE

See Rectangular Silencer Cross-Section Dimensions to ensure selection matches ductwork dimensions.

CERTIFIED PERFORMANCE DATA

VIBRO-ACOUSTICS®
A Swegon Group company

CMB-LV-F1

Circular MoldBlock
Low velocity silencer
(<1500 fpm)

How to Specify Example:

24 X **CMB-LV-F1** X **72**

- **24**: Duct Connection Size
- **CMB-LV-F1**: Silencer Model
- **72**: Silencer Length

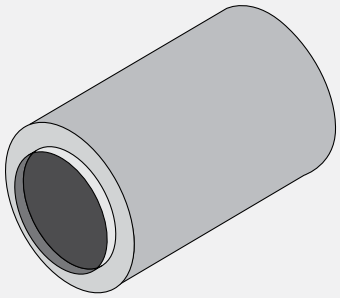

Insertion Loss (IL)

+ : "forward flow" where noise & airflow move in same direction (e.g. supply side)

- : "reverse flow" where noise & airflow move in opposite directions (e.g. return side)

DC Size - Duct Connection Size (in.)

SL - Silencer Length (in.)

FV - Face Velocity (ft. per min)

SO Dia. - Silencer Outer Diameter (in.)

See Silencer Selection Instructions. DIL above 50dB may be limited due to noise flanking around the silencer or along the duct walls. If more than 50dB DIL is required, contact your local Vibro-Acoustics representative or call **1-800-565-8401**.

DC Size (in.)	SL (in.)	FV (ft. per min)	Octave Band - Hz/Dynamic Insertion Loss (dB)							
			63	125	250	500	1000	2000	4000	8000
12	24	- 1000	6	9	14	20	30	44	49	20
		+ 1000	6	9	12	19	27	42	49	20
24	48	- 1000	6	10	19	24	37	47	40	13
		+ 1000	6	10	18	23	34	45	40	13
36	72	- 1000	9	14	23	30	37	39	27	10
		+ 1000	9	14	21	28	34	37	27	10
48	96	- 1000	10	18	27	32	35	34	21	9
		+ 1000	10	18	26	31	32	32	21	9
60	120	- 1000	11	20	28	33	34	30	19	9
		+ 1000	11	20	27	32	30	28	19	9

DC Size (in.)	SL (in.)	FV (ft. per min)	Octave Band - Hz/Dynamic Insertion Loss (dB)							
			63	125	250	500	1000	2000	4000	8000
12	36	- 1000	7	13	20	30	44	60	60	30
		+ 1000	7	13	19	28	41	60	60	30
24	72	- 1000	9	16	29	35	49	60	55	19
		+ 1000	9	16	27	34	46	58	55	19
36	108	- 1000	11	21	34	42	49	56	41	15
		+ 1000	11	21	32	40	46	54	41	15
48	144	- 1000	16	27	41	43	48	50	33	14
		+ 1000	16	27	39	42	44	48	33	14
60	180	- 1000	16	29	43	45	48	44	29	13
		+ 1000	16	29	41	43	44	42	29	13

Pressure Drop (PD)

Pressure drops are reported in accordance with ASTM E477 methods and are based upon **ideal** flow conditions (5 diameters of straight duct on silencer inlet and 10 on outlet). Less than ideal conditions will result in an increase in pressure drop due to System Effects. See Silencer System Effects Data.

☐ Acceptable (0 - 0.35")

☐ Caution (>0.35") Pressure Drop may be too high for certain applications

DC Size (in.)	SO Dia. (in.)	SL (in.)	Face Velocity (ft. per min) / Pressure Drop (in.w.g.)						
			500	1000	1500	2000	2500	3000	3500
12	28	24	0.02	0.09	0.20	0.36	0.57	0.82	1.11
		36	0.04	0.15	0.33	0.59	0.92	1.33	1.81
24	40	48	0.02	0.09	0.22	0.36	0.57	0.82	1.11
		72	0.03	0.12	0.27	0.48	0.74	1.07	1.46
36	52	72	0.02	0.08	0.19	0.33	0.52	0.74	1.01
		108	0.03	0.10	0.23	0.40	0.63	0.90	1.23
48	64	96	0.02	0.08	0.19	0.33	0.52	0.74	1.01
		144	0.03	0.10	0.23	0.42	0.65	0.94	1.28
60	76	120	0.02	0.08	0.19	0.33	0.52	0.74	1.01
		180	0.03	0.10	0.23	0.40	0.63	0.90	1.23

Generated Noise (GN)

@ 3 sq.ft. face area

Length (in.)	Face Velocity (ft. per min)	Octave Band - Hz/Generated Noise (dB re 10^{-12} watts)							
		63	125	250	500	1000	2000	4000	8000
All	- 1500	59	52	44	43	45	47	44	42
	- 500	54	47	39	38	40	42	39	37
	+ 500	53	46	39	37	37	39	37	35
	+ 750	58	51	44	42	42	44	42	40

GN correction chart at right must be used to correct GN to other face areas. →

Face Area (sq.ft.)	1.5	3	6	12	24	48
dB	-3	0	+3	+6	+9	+12

CMB-LV-F2

Circular MoldBlock
Low velocity silencer
(<1500 fpm)

How to Specify Example:

24 X **CMB-LV-F2** X **72**

- **24**: Duct Connection Size
- **CMB-LV-F2**: Silencer Model
- **72**: Silencer Length

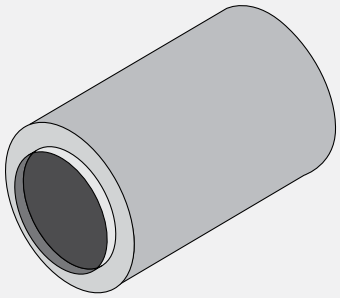

Insertion Loss (IL)

+ : "forward flow" where noise & airflow move in same direction (e.g. supply side)

- : "reverse flow" where noise & airflow move in opposite directions (e.g. return side)

DC Size - Duct Connection Size (in.)

SL - Silencer Length (in.)

FV - Face Velocity (ft. per min)

SO Dia. - Silencer Outer Diameter (in.)

See Silencer Selection Instructions. DIL above 50dB may be limited due to noise flanking around the silencer or along the duct walls. If more than 50dB DIL is required, contact your local Vibro-Acoustics representative or call **1-800-565-8401**.

DC Size (in.)	SL (in.)	FV (ft. per min)	Octave Band - Hz/Dynamic Insertion Loss (dB)							
			63	125	250	500	1000	2000	4000	8000
12	24	- 1000	4	7	16	28	39	44	43	31
		+ 1000	4	7	14	26	35	42	43	31
24	48	- 1000	4	8	22	34	47	47	35	20
		+ 1000	4	8	20	32	43	45	35	20
36	72	- 1000	6	11	26	41	47	39	24	15
		+ 1000	6	11	24	39	43	37	24	15
48	96	- 1000	7	14	31	45	45	34	19	14
		+ 1000	7	14	29	43	41	32	19	14
60	120	- 1000	8	15	32	46	43	30	17	13
		+ 1000	8	15	30	44	39	28	17	13

DC Size (in.)	SL (in.)	FV (ft. per min)	Octave Band - Hz/Dynamic Insertion Loss (dB)							
			63	125	250	500	1000	2000	4000	8000
12	36	- 1000	5	10	23	41	57	60	60	46
		+ 1000	5	10	21	39	53	60	60	46
24	72	- 1000	6	12	33	49	60	60	49	29
		+ 1000	6	12	31	47	59	58	49	29
36	108	- 1000	8	16	38	58	60	56	36	23
		+ 1000	8	16	36	56	59	54	36	23
48	144	- 1000	11	21	46	60	60	50	29	21
		+ 1000	11	21	44	58	57	48	29	21
60	180	- 1000	11	22	48	60	60	44	26	20
		+ 1000	11	22	46	60	57	42	26	20

Pressure Drop (PD)

Pressure drops are reported in accordance with ASTM E477 methods and are based upon **ideal** flow conditions (5 diameters of straight duct on silencer inlet and 10 on outlet). Less than ideal conditions will result in an increase in pressure drop due to System Effects. See Silencer System Effects Data.

☐ Acceptable (0 - 0.35")

☐ Caution (>0.35") Pressure Drop may be too high for certain applications

DC Size (in.)	SO Dia. (in.)	SL (in.)	Face Velocity (ft. per min) / Pressure Drop (in.w.g.)						
			500	1000	1500	2000	2500	3000	3500
12	20	24	0.02	0.09	0.20	0.36	0.57	0.82	1.11
		36	0.04	0.15	0.33	0.59	0.92	1.33	1.81
24	32	48	0.02	0.08	0.19	0.33	0.52	0.74	1.01
		72	0.03	0.13	0.29	0.51	0.80	1.15	1.56
36	44	72	0.02	0.09	0.20	0.36	0.57	0.82	1.11
		108	0.03	0.12	0.27	0.48	0.74	1.07	1.46
48	56	96	0.02	0.08	0.19	0.33	0.52	0.74	1.01
		144	0.03	0.10	0.23	0.42	0.65	0.94	1.28
60	68	120	0.02	0.08	0.19	0.33	0.52	0.74	1.01
		180	0.03	0.10	0.23	0.40	0.63	0.90	1.23

Generated Noise (GN)

@ 3 sq.ft. face area

Length (in.)	Face Velocity (ft. per min)	Octave Band - Hz/Generated Noise (dB re 10^{-12} watts)							
		63	125	250	500	1000	2000	4000	8000
All	- 1500	59	52	44	43	45	47	44	42
	- 500	54	47	39	38	40	42	39	37
	+ 500	53	46	39	37	37	39	37	35
	+ 750	58	51	44	42	42	44	42	40

GN correction chart at right must be used to correct GN to other face areas. →

Face Area (sq.ft.)	1.5	3	6	12	24	48
dB	-3	0	+3	+6	+9	+12

CERTIFIED PERFORMANCE DATA

VIBRO-ACOUSTICS®
A Swegon Group company

CMB-MV-F1

Circular MoldBlock
Medium velocity silencer
(<3000 fpm)

How to Specify Example:

24 X **CMB-MV-F1** X **72**

- **24**: Duct Connection Size
- **CMB-MV-F1**: Silencer Model
- **72**: Silencer Length

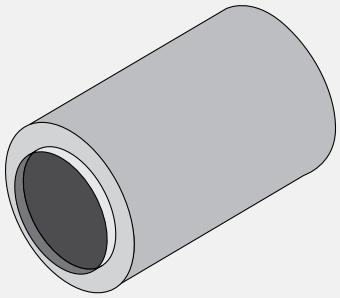

Insertion Loss (IL)

+ : "forward flow" where noise & airflow move in same direction (e.g. supply side)

- : "reverse flow" where noise & airflow move in opposite directions (e.g. return side)

DC Size - Duct Connection Size (in.)

SL - Silencer Length (in.)

FV - Face Velocity (ft. per min)

SO Dia. - Silencer Outer Diameter (in.)

See Silencer Selection Instructions. DIL above 50dB may be limited due to noise flanking around the silencer or along the duct walls. If more than 50dB DIL is required, contact your local Vibro-Acoustics representative or call **1-800-565-8401**.

DC Size (in.)	SL (in.)	FV (ft. per min)	Octave Band - Hz/Dynamic Insertion Loss (dB)							
			63	125	250	500	1000	2000	4000	8000
12	24	- 1000	5	8	13	22	31	33	30	18
		+ 1000	5	8	13	20	27	33	32	22
24	48	- 1000	5	9	18	27	37	34	22	13
		+ 1000	5	9	18	25	33	34	24	17
36	72	- 1000	8	14	22	32	37	26	16	9
		+ 1000	8	14	22	30	33	26	18	13
48	96	- 1000	10	17	26	35	35	22	13	9
		+ 1000	10	18	26	33	31	22	15	13
60	120	- 1000	10	17	29	36	31	19	12	8
		+ 1000	10	17	29	34	27	19	14	12

DC Size (in.)	SL (in.)	FV (ft. per min)	Octave Band - Hz/Dynamic Insertion Loss (dB)							
			63	125	250	500	1000	2000	4000	8000
12	36	- 1000	7	11	20	32	46	49	46	28
		+ 1000	7	11	20	30	42	49	48	32
24	72	- 1000	8	14	28	42	55	52	32	19
		+ 1000	8	14	28	40	51	52	34	23
36	108	- 1000	12	20	33	48	54	39	25	15
		+ 1000	12	20	33	46	50	39	27	19
48	144	- 1000	13	24	40	52	51	33	20	14
		+ 1000	13	24	40	50	47	33	22	18
60	180	- 1000	15	26	43	53	46	28	18	13
		+ 1000	15	26	43	51	42	28	30	17

Pressure Drop (PD)

Pressure drops are reported in accordance with ASTM E477 methods and are based upon **ideal** flow conditions (5 diameters of straight duct on silencer inlet and 10 on outlet). Less than ideal conditions will result in an increase in pressure drop due to System Effects. See Silencer System Effects Data.

☐ Acceptable (0 - 0.35")

▒ Caution (>0.35") Pressure Drop may be too high for certain applications

DC Size (in.)	SO Dia. (in.)	SL (in.)	Face Velocity (ft. per min) / Pressure Drop (in.w.g.)						
			1000	1500	2000	2500	3000	3500	4000
12	28	24	0.02	0.05	0.10	0.15	0.21	0.29	0.38
		36	0.04	0.09	0.16	0.24	0.35	0.48	0.63
24	40	48	0.02	0.05	0.10	0.15	0.21	0.29	0.38
		72	0.04	0.08	0.15	0.23	0.33	0.45	0.59
36	52	72	0.02	0.05	0.10	0.15	0.21	0.29	0.38
		108	0.03	0.07	0.13	0.20	0.29	0.40	0.52
48	64	96	0.02	0.05	0.09	0.14	0.20	0.28	0.36
		144	0.03	0.07	0.12	0.19	0.28	0.38	0.49
60	76	120	0.02	0.05	0.09	0.14	0.19	0.26	0.35
		180	0.03	0.07	0.12	0.18	0.26	0.36	0.47

Generated Noise (GN)

@ 3 sq.ft. face area

Length (in.)	Face Velocity (ft. per min)	Octave Band - Hz/Generated Noise (dB re 10^{-12} watts)							
		63	125	250	500	1000	2000	4000	8000
All	- 3000	63	56	50	57	56	57	55	52
	- 1500	49	42	38	43	43	42	36	31
	+ 1500	48	41	38	42	40	39	34	29
	+ 3000	62	55	59	56	53	54	53	50

GN correction chart at right must be used to correct GN to other face areas. →

Face Area (sq.ft.)	1.5	3	6	12	24	48
dB	-3	0	+3	+6	+9	+12

CMB-MV-F2

Circular MoldBlock
Medium velocity silencer
(<3000 fpm)

How to Specify Example:

24 X **CMB-MV-F2** X **72**

- **24**: Duct Connection Size
- **CMB-MV-F2**: Silencer Model
- **72**: Silencer Length

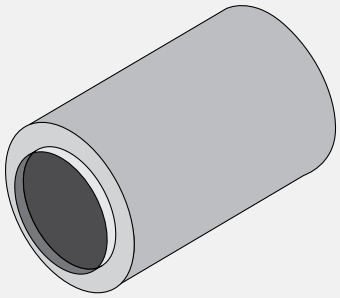

Insertion Loss (IL)

+ : "forward flow" where noise & airflow move in same direction (e.g. supply side)

- : "reverse flow" where noise & airflow move in opposite directions (e.g. return side)

DC Size - Duct Connection Size (in.)

SL - Silencer Length (in.)

FV - Face Velocity (ft. per min)

SO Dia. - Silencer Outer Diameter (in.)

See Silencer Selection Instructions. DIL above 50dB may be limited due to noise flanking around the silencer or along the duct walls. If more than 50dB DIL is required, contact your local Vibro-Acoustics representative or call **1-800-565-8401**.

DC Size (in.)	SL (in.)	FV (ft. per min)	Octave Band - Hz/Dynamic Insertion Loss (dB)							
			63	125	250	500	1000	2000	4000	8000
12	24	- 2000	3	5	11	22	31	33	30	18
		+ 2000	3	5	11	20	27	33	32	22
24	48	- 2000	3	6	16	27	37	34	22	13
		+ 2000	3	6	16	25	33	34	24	17
36	72	- 2000	5	9	19	32	37	26	16	9
		+ 2000	5	9	19	30	33	26	18	13
48	96	- 2000	6	11	23	35	35	22	13	9
		+ 2000	6	11	23	33	31	22	15	13
60	120	- 2000	6	11	25	36	31	19	12	8
		+ 2000	6	11	25	34	27	19	14	12

DC Size (in.)	SL (in.)	FV (ft. per min)	Octave Band - Hz/Dynamic Insertion Loss (dB)							
			63	125	250	500	1000	2000	4000	8000
12	36	- 2000	4	7	17	32	46	49	46	28
		+ 2000	4	7	17	30	42	49	38	32
24	72	- 2000	5	9	24	42	55	52	32	19
		+ 2000	5	9	24	40	51	52	34	23
36	108	- 2000	7	13	29	48	54	39	25	15
		+ 2000	7	13	29	46	50	39	27	19
48	144	- 2000	8	16	35	52	51	33	20	14
		+ 2000	8	16	35	50	47	33	22	18
60	180	- 2000	9	17	37	53	46	28	18	13
		+ 2000	9	17	37	51	42	28	20	17

Pressure Drop (PD)

Pressure drops are reported in accordance with ASTM E477 methods and are based upon **ideal** flow conditions (5 diameters of straight duct on silencer inlet and 10 on outlet). Less than ideal conditions will result in an increase in pressure drop due to System Effects. See Silencer System Effects Data.

☐ Acceptable (0 - 0.35")

▒ Caution (>0.35") Pressure Drop may be too high for certain applications

DC Size (in.)	SO Dia. (in.)	SL (in.)	Face Velocity (ft. per min) / Pressure Drop (in.w.g.)						
			1000	1500	2000	2500	3000	3500	4000
12	20	24	0.02	0.05	0.10	0.15	0.21	0.29	0.38
		36	0.04	0.09	0.16	0.24	0.35	0.48	0.63
24	32	48	0.02	0.05	0.10	0.15	0.21	0.29	0.38
		72	0.04	0.08	0.15	0.23	0.33	0.45	0.59
36	44	72	0.02	0.05	0.10	0.15	0.21	0.29	0.38
		108	0.03	0.07	0.13	0.20	0.29	0.40	0.52
48	56	96	0.02	0.05	0.09	0.14	0.20	0.28	0.36
		144	0.03	0.07	0.12	0.19	0.28	0.38	0.49
60	68	120	0.02	0.05	0.09	0.14	0.19	0.26	0.35
		180	0.03	0.07	0.12	0.18	0.26	0.36	0.47

Generated Noise (GN)

@ 3 sq.ft. face area

Length (in.)	Face Velocity (ft. per min)	Octave Band - Hz/Generated Noise (dB re 10^{-12} watts)							
		63	125	250	500	1000	2000	4000	8000
All	- 3000	63	56	50	57	56	57	55	52
	- 1500	49	42	38	43	43	42	36	31
	+ 1500	48	41	38	42	40	39	34	29
	+ 3000	62	55	50	56	53	54	53	50

GN correction chart at right must be used to correct GN to other face areas. →

Face Area (sq.ft.)	1.5	3	6	12	24	48
dB	-3	0	+3	+6	+9	+12

CERTIFIED PERFORMANCE DATA

VIBRO-ACOUSTICS®
A Swegon Group company

CMB-HV-F1

Circular MoldBlock
High velocity silencer
(<5000 fpm)

How to Specify Example:

24 X **CMB-HV-F1** X **72**

- **24** — Duct Connection Size
- **CMB-HV-F1** — Silencer Model
- **72** — Silencer Length

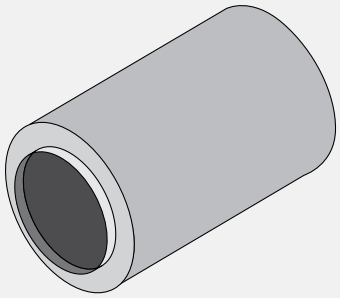

Insertion Loss (IL)

+ : "forward flow" where noise & airflow move in same direction (e.g. supply side)

- : "reverse flow" where noise & airflow move in opposite directions (e.g. return side)

DC Size - Duct Connection Size (in.)

SL - Silencer Length (in.)

FV - Face Velocity (ft. per min)

SO Dia. - Silencer Outer Diameter (in.)

See Silencer Selection Instructions. DIL above 50dB may be limited due to noise flanking around the silencer or along the duct walls. If more than 50dB DIL is required, contact your local Vibro-Acoustics representative or call **1-800-565-8401**.

DC Size (in.)	SL (in.)	FV (ft. per min)	Octave Band - Hz/Dynamic Insertion Loss (dB)							
			63	125	250	500	1000	2000	4000	8000
12	24	- 4000	5	8	13	19	26	27	22	13
		+ 4000	2	5	10	15	24	27	24	13
24	48	- 4000	7	9	16	24	30	24	14	11
		+ 4000	3	6	14	20	28	24	16	11
36	72	- 4000	8	12	20	28	28	19	12	9
		+ 4000	5	9	17	24	26	19	14	9
48	96	- 4000	10	15	23	31	25	15	10	9
		+ 4000	7	12	21	27	23	15	12	9
60	120	- 4000	10	15	25	31	22	14	10	9
		+ 4000	7	12	23	27	20	14	12	9

DC Size (in.)	SL (in.)	FV (ft. per min)	Octave Band - Hz/Dynamic Insertion Loss (dB)							
			63	125	250	500	1000	2000	4000	8000
12	36	- 4000	7	11	18	28	38	41	33	20
		+ 4000	3	8	16	24	36	41	35	20
24	72	- 4000	8	14	25	37	46	36	22	17
		+ 4000	5	11	23	33	44	36	24	17
36	108	- 4000	12	18	29	41	41	28	18	14
		+ 4000	8	15	26	37	39	28	20	14
48	144	- 4000	13	23	35	45	37	23	15	13
		+ 4000	10	20	32	41	35	23	17	13
60	180	- 4000	13	23	37	45	32	21	15	13
		+ 4000	10	20	35	41	30	21	17	13

Pressure Drop (PD)

Pressure drops are reported in accordance with ASTM E477 methods and are based upon **ideal** flow conditions (5 diameters of straight duct on silencer inlet and 10 on outlet). Less than ideal conditions will result in an increase in pressure drop due to System Effects. See Silencer System Effects Data.

☐ Acceptable (0 - 0.35")

▒ Caution (>0.35") Pressure Drop may be too high for certain applications

DC Size (in.)	SO Dia. (in.)	SL (in.)	Face Velocity (ft. per min) / Pressure Drop (in.w.g.)						
			1000	2000	3000	4000	5000	6000	7000
12	28	24	0.01	0.03	0.08	0.14	0.22	0.31	0.43
		36	0.01	0.06	0.13	0.24	0.37	0.53	0.73
24	40	48	0.01	0.04	0.08	0.15	0.23	0.33	0.45
		72	0.02	0.07	0.15	0.27	0.42	0.60	0.82
36	52	72	0.01	0.04	0.08	0.15	0.23	0.33	0.45
		108	0.02	0.06	0.14	0.26	0.40	0.58	0.78
48	64	96	0.01	0.04	0.08	0.15	0.23	0.33	0.45
		144	0.02	0.06	0.14	0.25	0.39	0.55	0.75
60	76	120	0.01	0.04	0.08	0.15	0.23	0.33	0.44
		180	0.01	0.06	0.13	0.23	0.36	0.51	0.70

Generated Noise (GN)

@ 3 sq.ft. face area

Length (in.)	Face Velocity (ft. per min)	Octave Band - Hz/Generated Noise (dB re 10^{-12} watts)							
		63	125	250	500	1000	2000	4000	8000
All	- 5000	73	66	61	70	69	67	68	66
	- 3000	60	53	49	58	56	56	52	46
	+ 3000	59	52	49	57	53	53	50	44
	+ 5000	72	65	61	69	66	64	66	64

GN correction chart at right must be used to correct GN to other face areas. →

Face Area (sq.ft.)	1.5	3	6	12	24	48
dB	-3	0	+3	+6	+9	+12

CMB-HV-F2

Circular MoldBlock
High velocity silencer
(<5000 fpm)

How to Specify Example:

24 X **CMB-HV-F2** X **72**

- **24** — Duct Connection Size
- **CMB-HV-F2** — Silencer Model
- **72** — Silencer Length

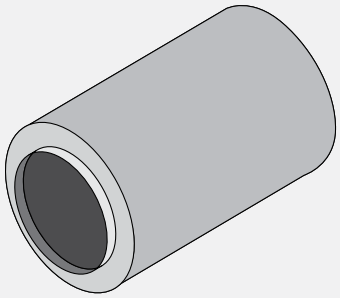

Insertion Loss (IL)

+ : "forward flow" where noise & airflow move in same direction (e.g. supply side)

- : "reverse flow" where noise & airflow move in opposite directions (e.g. return side)

DC Size - Duct Connection Size (in.)

SL - Silencer Length (in.)

FV - Face Velocity (ft. per min)

SO Dia. - Silencer Outer Diameter (in.)

See Silencer Selection Instructions. DIL above 50dB may be limited due to noise flanking around the silencer or along the duct walls. If more than 50dB DIL is required, contact your local Vibro-Acoustics representative or call **1-800-565-8401**.

DC Size (in.)	SL (in.)	FV (ft. per min)	Octave Band - Hz/Dynamic Insertion Loss (dB)							
			63	125	250	500	1000	2000	4000	8000
12	24	- 4000	3	1	11	19	26	27	22	13
		+ 4000	1	3	9	15	24	27	24	13
24	48	- 4000	4	6	16	24	30	24	14	11
		+ 4000	2	4	12	20	28	24	16	11
36	72	- 4000	5	8	17	28	28	19	12	9
		+ 4000	3	6	15	24	26	19	14	9
48	96	- 4000	6	10	20	31	25	15	10	9
		+ 4000	4	8	18	27	23	15	12	9
60	120	- 4000	6	10	22	31	22	14	10	9
		+ 4000	4	8	20	27	20	14	12	9

DC Size (in.)	SL (in.)	FV (ft. per min)	Octave Band - Hz/Dynamic Insertion Loss (dB)							
			63	125	250	500	1000	2000	4000	8000
12	36	- 4000	4	7	16	28	38	41	33	20
		+ 4000	2	5	14	24	36	41	35	20
24	72	- 4000	5	9	22	37	46	36	22	17
		+ 4000	3	7	20	33	44	36	24	17
36	108	- 4000	7	12	25	41	41	28	18	14
		+ 4000	5	10	23	37	39	28	20	14
48	144	- 4000	8	15	30	45	37	23	15	13
		+ 4000	6	13	28	41	35	23	17	13
60	180	- 4000	8	15	32	45	32	21	15	13
		+ 4000	6	13	35	41	30	21	17	13

Pressure Drop (PD)

Pressure drops are reported in accordance with ASTM E477 methods and are based upon **ideal** flow conditions (5 diameters of straight duct on silencer inlet and 10 on outlet). Less than ideal conditions will result in an increase in pressure drop due to System Effects. See Silencer System Effects Data.

☐ Acceptable (0 - 0.35")

▒ Caution (>0.35") Pressure Drop may be too high for certain applications

DC Size (in.)	SO Dia. (in.)	SL (in.)	Face Velocity (ft. per min) / Pressure Drop (in.w.g.)						
			1000	2000	3000	4000	5000	6000	7000
12	20	24	0.01	0.03	0.08	0.14	0.22	0.31	0.43
		36	0.01	0.06	0.13	0.24	0.37	0.53	0.73
24	32	48	0.01	0.04	0.08	0.15	0.23	0.33	0.45
		72	0.02	0.07	0.15	0.27	0.42	0.60	0.82
36	44	72	0.01	0.04	0.08	0.15	0.23	0.33	0.45
		108	0.02	0.06	0.14	0.26	0.40	0.58	0.78
48	56	96	0.01	0.04	0.08	0.15	0.23	0.33	0.45
		144	0.02	0.06	0.14	0.25	0.39	0.55	0.75
60	68	120	0.01	0.04	0.08	0.15	0.23	0.33	0.44
		180	0.01	0.06	0.13	0.23	0.36	0.51	0.70

Generated Noise (GN)

@ 3 sq.ft. face area

Length (in.)	Face Velocity (ft. per min)	Octave Band - Hz/Generated Noise (dB re 10^{-12} watts)							
		63	125	250	500	1000	2000	4000	8000
All	- 5000	73	66	61	70	69	67	68	66
	- 3000	60	53	49	58	56	56	52	46
	+ 3000	59	52	49	57	53	53	50	44
	+ 5000	72	65	61	69	66	64	66	64

GN correction chart at right must be used to correct GN to other face areas. →

Face Area (sq.ft.)	1.5	3	6	12	24	48
dB	-3	0	+3	+6	+9	+12

CERTIFIED PERFORMANCE DATA

VIBRO-ACOUSTICS®
A Swegon Group company

CMB-UHV-F1

Circular MoldBlock
Ultra high velocity silencer
(<7000 fpm)

How to Specify Example:

24 X **CMB-UHV-F1** X **72**

- **24** — Duct Connection Size
- **CMB-UHV-F1** — Silencer Model
- **72** — Silencer Length

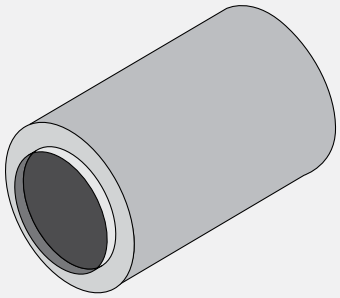

Insertion Loss (IL)

+ : "forward flow" where noise & airflow move in same direction (e.g. supply side)

- : "reverse flow" where noise & airflow move in opposite directions (e.g. return side)

DC Size - Duct Connection Size (in.)

SL - Silencer Length (in.)

FV - Face Velocity (ft. per min)

SO Dia. - Silencer Outer Diameter (in.)

See Silencer Selection Instructions. DIL above 50dB may be limited due to noise flanking around the silencer or along the duct walls. If more than 50dB DIL is required, contact your local Vibro-Acoustics representative or call **1-800-565-8401**.

DC Size (in.)	SL (in.)	FV (ft. per min)	Octave Band - Hz/Dynamic Insertion Loss (dB)							
			63	125	250	500	1000	2000	4000	8000
12	24	- 6000	3	5	12	15	13	11	7	5
		+ 6000	2	2	7	11	17	15	9	9
24	48	- 6000	7	11	16	20	13	6	6	3
		+ 6000	3	8	12	16	17	10	8	7
36	72	- 6000	8	12	18	19	9	5	5	2
		+ 6000	5	9	14	15	13	9	7	6
48	96	- 6000	10	15	21	18	5	4	4	1
		+ 6000	7	12	16	14	9	8	6	5
60	120	- 6000	10	15	22	14	4	4	4	1
		+ 6000	7	12	17	10	8	8	6	5

DC Size (in.)	SL (in.)	FV (ft. per min)	Octave Band - Hz/Dynamic Insertion Loss (dB)							
			63	125	250	500	1000	2000	4000	8000
12	36	- 6000	5	6	16	22	20	17	12	9
		+ 6000	2	3	12	18	24	21	14	13
24	72	- 6000	8	14	22	29	20	9	9	6
		+ 6000	5	11	17	25	24	13	11	10
36	108	- 6000	12	18	28	27	14	8	8	5
		+ 6000	8	15	23	23	18	12	10	9
48	144	- 6000	12	20	30	26	9	7	6	4
		+ 6000	8	17	25	22	13	11	8	8
60	180	- 6000	13	23	31	20	8	7	6	2
		+ 6000	10	20	26	16	12	11	8	6

Pressure Drop (PD)

Pressure drops are reported in accordance with ASTM E477 methods and are based upon **ideal** flow conditions (5 diameters of straight duct on silencer inlet and 10 on outlet). Less than ideal conditions will result in an increase in pressure drop due to System Effects. See Silencer System Effects Data.

☐ Acceptable (0 - 0.35")

▒ Caution (>0.35") Pressure Drop may be too high for certain applications

DC Size (in.)	SO Dia. (in.)	SL (in.)	Face Velocity (ft. per min) / Pressure Drop (in.w.g.)						
			2000	3000	4000	6000	7000	8000	0
12	28	24	0.01	0.03	0.04	0.10	0.14	0.18	0.00
		36	0.02	0.04	0.07	0.15	0.21	0.27	0.00
24	40	48	0.01	0.02	0.04	0.08	0.11	0.15	0.00
		72	0.01	0.03	0.06	0.13	0.18	0.23	0.00
36	52	72	0.01	0.02	0.03	0.08	0.10	0.13	0.00
		108	0.01	0.03	0.05	0.12	0.16	0.20	0.00
48	64	96	0.01	0.02	0.03	0.07	0.10	0.13	0.00
		144	0.01	0.03	0.05	0.11	0.15	0.19	0.00
60	76	120	0.01	0.02	0.03	0.07	0.09	0.12	0.00
		180	0.01	0.03	0.04	0.10	0.14	0.18	0.00

Generated Noise (GN)

@ 3 sq.ft. face area

Length (in.)	Face Velocity (ft. per min)	Octave Band - Hz/Generated Noise (dB re 10^{-12} watts)							
		63	125	250	500	1000	2000	4000	8000
All	- 7000	81	74	69	76	77	77	66	63
	- 5000	71	64	59	66	67	67	56	53
	+ 5000	70	63	59	65	64	64	54	51
	+ 7000	80	73	69	75	74	74	64	61

GN correction chart at right must be used to correct GN to other face areas. →

Face Area (sq.ft.)	1.5	3	6	12	24	48
dB	-3	0	+3	+6	+9	+12

CMB-UHV-F2

Circular MoldBlock
Ultra high velocity silencer
(<7000 fpm)

How to Specify Example:

24 X **CMB-UHV-F2** X **72**

- 24 — Duct Connection Size
- CMB-UHV-F2 — Silencer Model
- 72 — Silencer Length

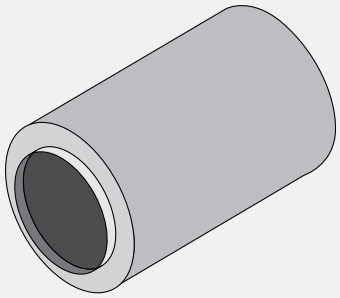

Insertion Loss (IL)

+ : "forward flow" where noise & airflow move in same direction (e.g. supply side)

- : "reverse flow" where noise & airflow move in opposite directions (e.g. return side)

DC Size - Duct Connection Size (in.)

SL - Silencer Length (in.)

FV - Face Velocity (ft. per min)

SO Dia. - Silencer Outer Diameter (in.)

See Silencer Selection Instructions. DIL above 50dB may be limited due to noise flanking around the silencer or along the duct walls. If more than 50dB DIL is required, contact your local Vibro-Acoustics representative or call **1-800-565-8401**.

DC Size (in.)	SL (in.)	FV (ft. per min)	Octave Band - Hz/Dynamic Insertion Loss (dB)							
			63	125	250	500	1000	2000	4000	8000
12	24	- 6000	2	3	10	15	13	11	7	5
		+ 6000	1	1	6	11	17	15	9	9
24	48	- 6000	4	7	14	20	13	6	6	3
		+ 6000	2	5	10	16	17	10	8	7
36	72	- 6000	5	8	16	19	9	5	5	2
		+ 6000	3	6	12	15	13	9	7	6
48	96	- 6000	6	10	18	18	5	4	4	1
		+ 6000	4	8	14	14	9	8	6	5
60	120	- 6000	6	10	19	14	4	4	4	1
		+ 6000	4	8	15	10	8	8	6	5

DC Size (in.)	SL (in.)	FV (ft. per min)	Octave Band - Hz/Dynamic Insertion Loss (dB)							
			63	125	250	500	1000	2000	4000	8000
12	36	- 6000	3	4	14	22	20	17	12	9
		+ 6000	1	2	10	18	24	21	14	13
24	72	- 6000	5	9	19	29	20	9	9	6
		+ 6000	3	7	15	25	24	13	11	10
36	108	- 6000	7	12	24	27	14	8	8	5
		+ 6000	5	10	20	23	18	12	10	9
48	144	- 6000	7	13	26	26	9	7	6	4
		+ 6000	5	11	22	22	13	11	8	8
60	180	- 6000	8	15	27	20	8	7	6	2
		+ 6000	6	13	23	16	12	11	8	6

Pressure Drop (PD)

Pressure drops are reported in accordance with ASTM E477 methods and are based upon **ideal** flow conditions (5 diameters of straight duct on silencer inlet and 10 on outlet). Less than ideal conditions will result in an increase in pressure drop due to System Effects. See Silencer System Effects Data.

☐ Acceptable (0 - 0.35")

▒ Caution (>0.35") Pressure Drop may be too high for certain applications

DC Size (in.)	SO Dia. (in.)	SL (in.)	Face Velocity (ft. per min) / Pressure Drop (in.w.g.)						
			2000	3000	4000	5000	6000	7000	8000
12	20	24	0.01	0.03	0.04	0.07	0.10	0.14	0.18
		36	0.02	0.04	0.07	0.11	0.15	0.21	0.27
24	32	48	0.01	0.02	0.04	0.06	0.08	0.11	0.15
		72	0.01	0.03	0.06	0.09	0.13	0.18	0.23
36	44	72	0.01	0.02	0.03	0.05	0.08	0.10	0.13
		108	0.01	0.03	0.05	0.08	0.12	0.16	0.20
48	56	96	0.01	0.02	0.03	0.05	0.07	0.10	0.13
		144	0.01	0.03	0.05	0.08	0.11	0.15	0.19
60	68	120	0.01	0.02	0.03	0.05	0.07	0.09	0.12
		180	0.01	0.03	0.04	0.07	0.10	0.14	0.18

Generated Noise (GN)

@ 3 sq.ft. face area

Length (in.)	Face Velocity (ft. per min)	Octave Band - Hz/Generated Noise (dB re 10^{-12} watts)							
		63	125	250	500	1000	2000	4000	8000
All	- 7000	81	74	69	76	77	77	66	63
	- 5000	71	64	59	66	67	67	56	53
	+ 5000	70	63	59	65	64	64	54	51
	+ 7000	80	73	69	75	74	74	64	61

GN correction chart at right must be used to correct GN to other face areas. →

Face Area (sq.ft.)	1.5	3	6	12	24	48
dB	-3	0	+3	+6	+9	+12

CERTIFIED PERFORMANCE DATA

VIBRO-ACOUSTICS®
A Swegon Group company

CFMB-LV-F1

Circular Film MoldBlock
Low velocity silencer
(<1500 fpm)

How to Specify Example:

24 X **CFMB-LV-F1** X **72**

- **24**: Duct Connection Size
- **CFMB-LV-F1**: Silencer Model
- **72**: Silencer Length

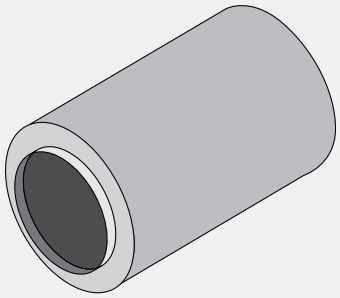

Insertion Loss (IL)

+ : "forward flow" where noise & airflow move in same direction (e.g. supply side)

- : "reverse flow" where noise & airflow move in opposite directions (e.g. return side)

DC Size - Duct Connection Size (in.)

SL - Silencer Length (in.)

FV - Face Velocity (ft. per min)

SO Dia. - Silencer Outer Diameter (in.)

See Silencer Selection Instructions. DIL above 50dB may be limited due to noise flanking around the silencer or along the duct walls. If more than 50dB DIL is required, contact your local Vibro-Acoustics representative or call **1-800-565-8401**.

DC Size (in.)	SL (in.)	FV (ft. per min)	Octave Band - Hz/Dynamic Insertion Loss (dB)							
			63	125	250	500	1000	2000	4000	8000
12	24	- 1000	6	9	14	20	30	44	49	20
		+ 1000	6	9	12	19	27	42	49	20
24	48	- 1000	6	10	19	24	37	47	40	13
		+ 1000	6	10	18	23	34	45	40	13
36	72	- 1000	9	14	23	30	37	39	27	10
		+ 1000	9	14	21	28	34	37	27	10
48	96	- 1000	10	18	27	32	35	34	21	9
		+ 1000	10	18	26	31	32	32	21	9
60	120	- 1000	11	20	28	33	34	30	19	9
		+ 1000	11	20	27	32	30	28	19	9

DC Size (in.)	SL (in.)	FV (ft. per min)	Octave Band - Hz/Dynamic Insertion Loss (dB)							
			63	125	250	500	1000	2000	4000	8000
12	36	- 1000	7	13	20	30	44	60	60	30
		+ 1000	7	13	19	28	41	60	60	30
24	72	- 1000	9	16	29	35	49	60	55	19
		+ 1000	9	16	27	34	46	58	55	19
36	108	- 1000	11	21	34	42	49	56	41	15
		+ 1000	11	21	32	40	46	54	41	15
48	144	- 1000	16	27	41	43	48	50	33	14
		+ 1000	16	27	39	42	44	48	33	14
60	180	- 1000	16	29	43	45	48	44	29	13
		+ 1000	16	29	41	43	44	42	29	13

Pressure Drop (PD)

Pressure drops are reported in accordance with ASTM E477 methods and are based upon **ideal** flow conditions (5 diameters of straight duct on silencer inlet and 10 on outlet). Less than ideal conditions will result in an increase in pressure drop due to System Effects. See Silencer System Effects Data.

☐ Acceptable (0 - 0.35")

▒ Caution (>0.35") Pressure Drop may be too high for certain applications

DC Size (in.)	SO Dia. (in.)	SL (in.)	Face Velocity (ft. per min) / Pressure Drop (in.w.g.)						
			500	1000	1500	2000	2500	3000	3500
12	28	24	0.02	0.09	0.20	0.36	0.57	0.82	1.11
		36	0.04	0.15	0.33	0.59	0.92	1.33	1.81
24	40	48	0.02	0.09	0.22	0.36	0.57	0.82	1.11
		72	0.03	0.12	0.27	0.48	0.74	1.07	1.46
36	52	72	0.02	0.08	0.19	0.33	0.52	0.74	1.01
		108	0.03	0.10	0.23	0.40	0.63	0.90	1.23
48	64	96	0.02	0.08	0.19	0.33	0.52	0.74	1.01
		144	0.03	0.10	0.23	0.42	0.65	0.94	1.28
60	76	120	0.02	0.08	0.19	0.33	0.52	0.74	1.01
		180	0.03	0.10	0.23	0.40	0.63	0.90	1.23

Generated Noise (GN)

@ 3 sq.ft. face area

Length (in.)	Face Velocity (ft. per min)	Octave Band - Hz/Generated Noise (dB re 10^{-12} watts)							
		63	125	250	500	1000	2000	4000	8000
All	- 1500	59	52	44	43	45	47	44	42
	- 1000	54	47	39	38	40	42	39	37
	+ 1000	53	46	39	37	37	39	37	35
	+ 1500	58	51	44	42	42	44	42	40

GN correction chart at right must be used to correct GN to other face areas. →

Face Area (sq.ft.)	1.5	3	6	12	24	48
dB	-3	0	+3	+6	+9	+12

CFMB-LV-F2

Circular Film MoldBlock
Low velocity silencer
(<1500 fpm)

How to Specify Example:

24 X **CFMB-LV-F2** X **72**

- **24**: Duct Connection Size
- **CFMB-LV-F2**: Silencer Model
- **72**: Silencer Length

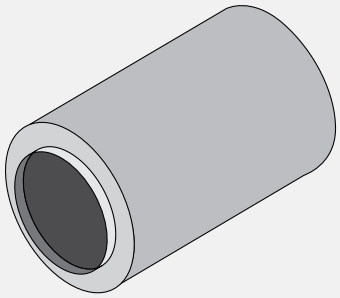

Insertion Loss (IL)

+ : "forward flow" where noise & airflow move in same direction (e.g. supply side)

- : "reverse flow" where noise & airflow move in opposite directions (e.g. return side)

DC Size - Duct Connection Size (in.)

SL - Silencer Length (in.)

FV - Face Velocity (ft. per min)

SO Dia. - Silencer Outer Diameter (in.)

See Silencer Selection Instructions. DIL above 50dB may be limited due to noise flanking around the silencer or along the duct walls. If more than 50dB DIL is required, contact your local Vibro-Acoustics representative or call **1-800-565-8401**.

DC Size (in.)	SL (in.)	FV (ft. per min)	Octave Band - Hz/Dynamic Insertion Loss (dB)							
			63	125	250	500	1000	2000	4000	8000
12	24	- 1000	3	6	12	20	30	44	49	20
		+ 1000	3	6	11	19	27	42	49	20
24	48	- 1000	3	7	17	24	37	47	40	13
		+ 1000	3	7	15	23	34	45	40	13
36	72	- 1000	5	10	20	30	37	39	27	10
		+ 1000	5	10	18	28	34	37	27	10
48	96	- 1000	6	12	24	32	35	34	21	9
		+ 1000	6	12	22	31	32	32	21	9
60	120	- 1000	7	13	25	33	34	30	19	9
		+ 1000	7	13	23	32	30	28	19	9

DC Size (in.)	SL (in.)	FV (ft. per min)	Octave Band - Hz/Dynamic Insertion Loss (dB)							
			63	125	250	500	1000	2000	4000	8000
12	36	- 1000	4	9	18	30	44	60	60	30
		+ 1000	4	9	16	28	41	60	60	30
24	72	- 1000	5	10	25	35	49	60	55	19
		+ 1000	5	10	24	34	46	58	55	19
36	108	- 1000	7	14	29	42	49	56	41	15
		+ 1000	7	14	28	40	46	54	41	15
48	144	- 1000	9	18	35	43	48	50	33	14
		+ 1000	9	18	34	42	44	48	33	14
60	180	- 1000	9	19	37	45	48	44	29	13
		+ 1000	9	19	35	43	44	42	29	13

Pressure Drop (PD)

Pressure drops are reported in accordance with ASTM E477 methods and are based upon **ideal** flow conditions (5 diameters of straight duct on silencer inlet and 10 on outlet). Less than ideal conditions will result in an increase in pressure drop due to System Effects. See Silencer System Effects Data.

☐ Acceptable (0 - 0.35")

▒ Caution (>0.35") Pressure Drop may be too high for certain applications

DC Size (in.)	SO Dia. (in.)	SL (in.)	Face Velocity (ft. per min) / Pressure Drop (in.w.g.)						
			500	1000	1500	2000	2500	3000	3500
12	20	24	0.02	0.09	0.20	0.36	0.57	0.82	1.11
		36	0.04	0.15	0.33	0.59	0.92	1.33	1.81
24	32	48	0.02	0.08	0.19	0.33	0.52	0.75	1.02
		72	0.03	0.13	0.29	0.51	0.80	1.15	1.57
36	44	72	0.02	0.09	0.20	0.36	0.57	0.82	1.11
		108	0.03	0.12	0.27	0.48	0.74	1.07	1.46
48	56	96	0.02	0.08	0.19	0.33	0.52	0.75	1.02
		144	0.03	0.10	0.23	0.42	0.65	0.94	1.27
60	68	120	0.02	0.08	0.19	0.33	0.52	0.75	1.02
		180	0.03	0.10	0.23	0.40	0.63	0.90	1.23

Generated Noise (GN)

@ 3 sq.ft. face area

Length (in.)	Face Velocity (ft. per min)	Octave Band - Hz/Generated Noise (dB re 10^{-12} watts)							
		63	125	250	500	1000	2000	4000	8000
All	- 1500	59	52	44	43	45	47	44	42
	- 1000	54	47	39	38	40	42	39	37
	+ 1000	53	46	39	37	37	39	37	35
	+ 1500	58	51	44	42	42	44	42	40

GN correction chart at right must be used to correct GN to other face areas. →

Face Area (sq.ft.)	1.5	3	6	12	24	48
dB	-3	0	+3	+6	+9	+12

CERTIFIED PERFORMANCE DATA

VIBRO-ACOUSTICS®
A Swegon Group company

CFMB-MV-F1

Circular Film MoldBlock
Medium velocity silencer
(<3000 fpm)

How to Specify Example:

24 X **CMFB-MV-F1** X **72**

- **24** — Duct Connection Size
- **CMFB-MV-F1** — Silencer Model
- **72** — Silencer Length

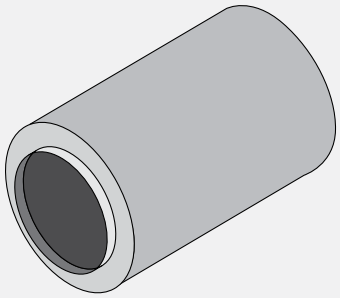

Insertion Loss (IL)

+ : "forward flow" where noise & airflow move in same direction (e.g. supply side)

- : "reverse flow" where noise & airflow move in opposite directions (e.g. return side)

DC Size - Duct Connection Size (in.)

SL - Silencer Length (in.)

FV - Face Velocity (ft. per min)

SO Dia. - Silencer Outer Diameter (in.)

See Silencer Selection Instructions. DIL above 50dB may be limited due to noise flanking around the silencer or along the duct walls. If more than 50dB DIL is required, contact your local Vibro-Acoustics representative or call **1-800-565-8401**.

DC Size (in.)	SL (in.)	FV (ft. per min)	Octave Band - Hz/Dynamic Insertion Loss (dB)							
			63	125	250	500	1000	2000	4000	8000
12	24	- 2000	4	7	10	16	24	33	34	12
		+ 2000	4	7	10	14	21	33	36	15
24	48	- 2000	4	8	14	19	29	34	25	9
		+ 2000	4	8	14	18	26	34	27	11
36	72	- 2000	7	12	17	23	29	26	18	6
		+ 2000	7	12	17	22	26	26	20	9
48	96	- 2000	9	14	20	25	27	22	15	6
		+ 2000	9	14	20	24	27	22	17	9
60	120	- 2000	9	14	22	26	24	19	14	5
		+ 2000	9	14	22	24	21	19	16	8

DC Size (in.)	SL (in.)	FV (ft. per min)	Octave Band - Hz/Dynamic Insertion Loss (dB)							
			63	125	250	500	1000	2000	4000	8000
12	36	- 2000	6	9	15	23	36	49	52	18
		+ 2000	6	9	15	22	33	49	54	21
24	72	- 2000	7	12	21	30	43	52	36	13
		+ 2000	7	12	21	29	40	52	38	15
36	108	- 2000	10	17	26	35	42	39	28	10
		+ 2000	10	17	26	33	39	39	31	13
48	144	- 2000	11	21	31	37	40	33	23	9
		+ 2000	11	21	31	36	37	33	25	12
60	180	- 2000	13	22	33	38	36	28	20	9
		+ 2000	13	22	33	37	33	28	23	11

Pressure Drop (PD)

Pressure drops are reported in accordance with ASTM E477 methods and are based upon **ideal** flow conditions (5 diameters of straight duct on silencer inlet and 10 on outlet). Less than ideal conditions will result in an increase in pressure drop due to System Effects. See Silencer System Effects Data.

☐ Acceptable (0 - 0.35")

▒ Caution (>0.35") Pressure Drop may be too high for certain applications

DC Size (in.)	SO Dia. (in.)	SL (in.)	Face Velocity (ft. per min) / Pressure Drop (in.w.g.)						
			1000	1500	2000	2500	3000	3500	4000
12	28	24	0.02	0.05	0.10	0.15	0.21	0.29	0.38
		36	0.04	0.09	0.16	0.24	0.35	0.48	0.63
24	40	48	0.02	0.05	0.10	0.15	0.21	0.29	0.38
		72	0.04	0.08	0.15	0.23	0.33	0.45	0.59
36	52	72	0.02	0.05	0.10	0.15	0.21	0.29	0.38
		108	0.03	0.07	0.13	0.20	0.29	0.40	0.52
48	64	96	0.02	0.05	0.09	0.14	0.20	0.28	0.36
		144	0.03	0.07	0.12	0.19	0.28	0.38	0.49
60	76	120	0.02	0.05	0.09	0.14	0.19	0.26	0.35
		180	0.03	0.07	0.12	0.18	0.26	0.36	0.47

Generated Noise (GN)

@ 3 sq.ft. face area

Length (in.)	Face Velocity (ft. per min)	Octave Band - Hz/Generated Noise (dB re 10^{-12} watts)							
		63	125	250	500	1000	2000	4000	8000
All	- 3000	63	56	50	57	56	57	55	52
	- 1500	49	42	38	43	43	42	36	31
	+ 1500	48	41	38	42	40	39	34	29
	+ 3000	62	55	59	56	53	54	53	50

GN correction chart at right must be used to correct GN to other face areas. →

Face Area (sq.ft.)	1.5	3	6	12	24	48
dB	-3	0	+3	+6	+9	+12

CFMB-MV-F2

Circular Film MoldBlock
Medium velocity silencer
(<3000 fpm)

How to Specify Example:

24 X **CFMB-MV-F2** X **72**

- **24**: Duct Connection Size
- **CFMB-MV-F2**: Silencer Model
- **72**: Silencer Length

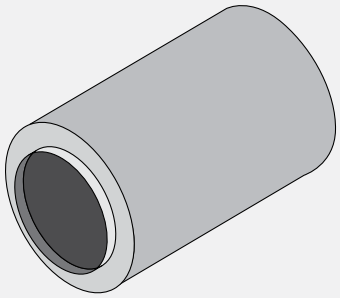

Insertion Loss (IL)

+ : "forward flow" where noise & airflow move in same direction (e.g. supply side)

- : "reverse flow" where noise & airflow move in opposite directions (e.g. return side)

DC Size - Duct Connection Size (in.)

SL - Silencer Length (in.)

FV - Face Velocity (ft. per min)

SO Dia. - Silencer Outer Diameter (in.)

See Silencer Selection Instructions. DIL above 50dB may be limited due to noise flanking around the silencer or along the duct walls. If more than 50dB DIL is required, contact your local Vibro-Acoustics representative or call **1-800-565-8401**.

DC Size (in.)	SL (in.)	FV (ft. per min)	Octave Band - Hz/Dynamic Insertion Loss (dB)							
			63	125	250	500	1000	2000	4000	8000
12	24	- 2000	3	4	8	16	24	33	34	12
		+ 2000	3	4	8	14	21	33	36	15
24	48	- 2000	3	5	12	19	29	34	25	9
		+ 2000	3	5	12	18	26	34	27	11
36	72	- 2000	4	8	15	23	29	26	18	6
		+ 2000	4	8	15	22	26	26	20	9
48	96	- 2000	5	10	18	25	27	22	15	6
		+ 2000	5	10	18	24	27	22	17	9
60	120	- 2000	5	10	19	26	24	19	14	5
		+ 2000	5	10	19	24	21	19	16	8

DC Size (in.)	SL (in.)	FV (ft. per min)	Octave Band - Hz/Dynamic Insertion Loss (dB)							
			63	125	250	500	1000	2000	4000	8000
12	36	- 2000	3	6	13	23	36	49	52	18
		+ 2000	3	6	13	22	33	49	54	21
24	72	- 2000	4	8	18	30	43	52	36	13
		+ 2000	4	8	18	29	40	52	38	15
36	108	- 2000	6	11	22	35	42	39	28	10
		+ 2000	6	11	22	33	39	39	31	13
48	144	- 2000	7	14	27	37	40	33	23	9
		+ 2000	7	14	27	36	37	33	25	12
60	180	- 2000	8	15	28	38	36	28	20	9
		+ 2000	8	15	28	37	33	28	23	11

Pressure Drop (PD)

Pressure drops are reported in accordance with ASTM E477 methods and are based upon **ideal** flow conditions (5 diameters of straight duct on silencer inlet and 10 on outlet). Less than ideal conditions will result in an increase in pressure drop due to System Effects. See Silencer System Effects Data.

☐ Acceptable (0 - 0.35")

▒ Caution (>0.35") Pressure Drop may be too high for certain applications

DC Size (in.)	SO Dia. (in.)	SL (in.)	Face Velocity (ft. per min) / Pressure Drop (in.w.g.)						
			1000	1500	2000	2500	3000	3500	4000
12	20	24	0.02	0.05	0.10	0.15	0.22	0.29	0.38
		36	0.04	0.09	0.16	0.24	0.35	0.48	0.62
24	32	48	0.02	0.05	0.10	0.15	0.22	0.29	0.38
		72	0.04	0.08	0.15	0.23	0.33	0.45	0.59
36	44	72	0.02	0.05	0.10	0.15	0.22	0.29	0.38
		108	0.03	0.07	0.13	0.21	0.28	0.40	0.53
48	56	96	0.02	0.05	0.09	0.14	0.21	0.28	0.37
		144	0.03	0.07	0.12	0.19	0.28	0.38	0.50
60	68	120	0.02	0.05	0.09	0.14	0.20	0.27	0.35
		180	0.03	0.07	0.12	0.18	0.26	0.36	0.46

Generated Noise (GN)

@ 3 sq.ft. face area

Length (in.)	Face Velocity (ft. per min)	Octave Band - Hz/Generated Noise (dB re 10^{-12} watts)							
		63	125	250	500	1000	2000	4000	8000
All	- 3000	63	56	50	57	56	57	55	52
	- 1500	49	42	38	43	43	42	36	31
	+ 1500	48	41	38	42	40	39	34	29
	+ 3000	62	55	50	56	53	54	53	50

GN correction chart at right must be used to correct GN to other face areas. →

Face Area (sq.ft.)	1.5	3	6	12	24	48
dB	-3	0	+3	+6	+9	+12

CERTIFIED PERFORMANCE DATA

VIBRO-ACOUSTICS®
A Swegon Group company

CFMB-HV-F1

Circular Film MoldBlock
High velocity silencer
(<5000 fpm)

How to Specify Example:

24 X **CFMB-HV-F1** X **72**

- **24** — Duct Connection Size
- **CFMB-HV-F1** — Silencer Model
- **72** — Silencer Length

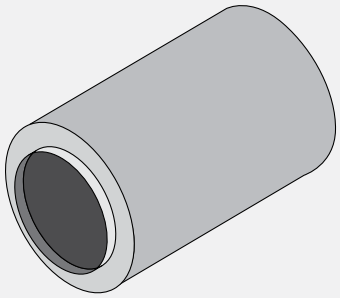

Insertion Loss (IL)

+ : "forward flow" where noise & airflow move in same direction (e.g. supply side)

- : "reverse flow" where noise & airflow move in opposite directions (e.g. return side)

DC Size - Duct Connection Size (in.)

SL - Silencer Length (in.)

FV - Face Velocity (ft. per min)

SO Dia. - Silencer Outer Diameter (in.)

See Silencer Selection Instructions. DIL above 50dB may be limited due to noise flanking around the silencer or along the duct walls. If more than 50dB DIL is required, contact your local Vibro-Acoustics representative or call **1-800-565-8401**.

DC Size (in.)	SL (in.)	FV (ft. per min)	Octave Band - Hz/Dynamic Insertion Loss (dB)							
			63	125	250	500	1000	2000	4000	8000
12	24	- 4000	4	7	10	14	20	27	25	9
		+ 4000	1	4	8	11	19	27	27	9
24	48	- 4000	6	8	12	17	23	24	16	7
		+ 4000	3	5	11	14	22	24	18	7
36	72	- 4000	7	10	15	20	22	19	14	6
		+ 4000	4	8	13	17	20	19	16	6
48	96	- 4000	9	13	18	22	22	18	11	6
		+ 4000	6	10	16	19	20	18	15	6
60	120	- 4000	9	13	19	22	17	14	11	6
		+ 4000	6	10	18	19	16	14	14	6

DC Size (in.)	SL (in.)	FV (ft. per min)	Octave Band - Hz/Dynamic Insertion Loss (dB)							
			63	125	250	500	1000	2000	4000	8000
12	36	- 4000	6	9	14	20	30	41	37	13
		+ 4000	3	7	12	17	28	41	40	13
24	72	- 4000	7	12	19	27	36	36	25	11
		+ 4000	4	9	18	24	34	36	27	11
36	108	- 4000	10	16	22	30	32	28	20	9
		+ 4000	7	13	20	27	30	28	23	9
48	144	- 4000	11	20	27	32	29	23	17	9
		+ 4000	9	17	25	30	31	27	19	9
60	180	- 4000	11	20	28	32	28	21	17	9
		+ 4000	9	17	27	30	23	21	19	9

Pressure Drop (PD)

Pressure drops are reported in accordance with ASTM E477 methods and are based upon **ideal** flow conditions (5 diameters of straight duct on silencer inlet and 10 on outlet). Less than ideal conditions will result in an increase in pressure drop due to System Effects. See Silencer System Effects Data.

☐ Acceptable (0 - 0.35")

☐ Caution (>0.35") Pressure Drop may be too high for certain applications

DC Size (in.)	SO Dia. (in.)	SL (in.)	Face Velocity (ft. per min) / Pressure Drop (in.w.g.)						
			1000	2000	3000	4000	5000	6000	7000
12	28	24	0.01	0.03	0.08	0.14	0.22	0.31	0.43
		36	0.01	0.06	0.13	0.24	0.37	0.53	0.73
24	40	48	0.01	0.04	0.08	0.15	0.23	0.33	0.45
		72	0.02	0.06	0.14	0.26	0.40	0.58	0.78
36	52	72	0.01	0.04	0.08	0.14	0.22	0.32	0.44
		108	0.01	0.06	0.13	0.23	0.36	0.51	0.70
48	64	96	0.01	0.04	0.08	0.15	0.23	0.33	0.45
		144	0.02	0.06	0.14	0.25	0.39	0.55	0.75
60	76	120	0.01	0.04	0.08	0.14	0.22	0.32	0.44
		180	0.01	0.06	0.13	0.23	0.36	0.51	0.70

Generated Noise (GN)

@ 3 sq.ft. face area

Length (in.)	Face Velocity (ft. per min)	Octave Band - Hz/Generated Noise (dB re 10^{-12} watts)							
		63	125	250	500	1000	2000	4000	8000
All	- 5000	73	66	61	70	69	67	68	66
	- 3000	60	53	49	58	56	56	52	46
	+ 3000	59	52	49	57	53	53	50	44
	+ 5000	72	65	61	69	66	64	66	64

GN correction chart at right must be used to correct GN to other face areas. →

Face Area (sq.ft.)	1.5	3	6	12	24	48
dB	-3	0	+3	+6	+9	+12

CFMB-HV-F2

Circular Film MoldBlock
High velocity silencer
(<5000 fpm)

How to Specify Example:

24 X **CFMB-HV-F2** X **72**

- **24** — Duct Connection Size
- **CFMB-HV-F2** — Silencer Model
- **72** — Silencer Length

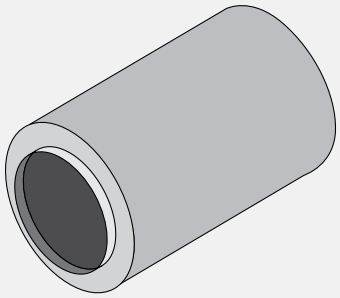

Insertion Loss (IL)

+ : "forward flow" where noise & airflow move in same direction (e.g. supply side)

- : "reverse flow" where noise & airflow move in opposite directions (e.g. return side)

DC Size - Duct Connection Size (in.)

SL - Silencer Length (in.)

FV - Face Velocity (ft. per min)

SO Dia. - Silencer Outer Diameter (in.)

See Silencer Selection Instructions. DIL above 50dB may be limited due to noise flanking around the silencer or along the duct walls. If more than 50dB DIL is required, contact your local Vibro-Acoustics representative or call **1-800-565-8401**.

DC Size (in.)	SL (in.)	FV (ft. per min)	Octave Band - Hz/Dynamic Insertion Loss (dB)							
			63	125	250	500	1000	2000	4000	8000
12	24	- 4000	3	4	8	14	20	27	25	9
		+ 4000	1	3	7	11	19	27	27	9
24	48	- 4000	3	5	11	17	23	24	16	7
		+ 4000	2	3	9	14	22	24	18	7
36	72	- 4000	4	7	13	20	22	19	14	6
		+ 4000	3	5	12	17	20	19	16	6
48	96	- 4000	5	9	15	22	20	15	11	6
		+ 4000	3	7	14	19	18	15	14	6
60	120	- 4000	5	9	17	22	17	14	11	6
		+ 4000	3	7	15	19	16	14	14	6

DC Size (in.)	SL (in.)	FV (ft. per min)	Octave Band - Hz/Dynamic Insertion Loss (dB)							
			63	125	250	500	1000	2000	4000	8000
12	36	- 4000	3	6	12	20	30	41	37	13
		+ 4000	2	4	11	17	28	41	40	13
24	72	- 4000	4	8	17	27	36	36	25	11
		+ 4000	3	6	15	24	34	36	27	11
36	108	- 4000	6	10	19	30	32	28	20	9
		+ 4000	4	9	18	27	30	28	23	9
48	144	- 4000	7	13	23	32	29	23	17	9
		+ 4000	5	11	22	30	27	23	19	9
60	180	- 4000	7	13	25	32	25	21	17	9
		+ 4000	5	11	23	30	23	21	19	9

Pressure Drop (PD)

Pressure drops are reported in accordance with ASTM E477 methods and are based upon **ideal** flow conditions (5 diameters of straight duct on silencer inlet and 10 on outlet). Less than ideal conditions will result in an increase in pressure drop due to System Effects. See Silencer System Effects Data.

☐ Acceptable (0 - 0.35")

▒ Caution (>0.35") Pressure Drop may be too high for certain applications

DC Size (in.)	SO Dia. (in.)	SL (in.)	Face Velocity (ft. per min) / Pressure Drop (in.w.g.)						
			1000	2000	3000	4000	5000	6000	7000
12	20	24	0.01	0.04	0.08	0.14	0.23	0.32	0.44
		36	0.02	0.06	0.14	0.24	0.38	0.54	0.74
24	32	48	0.01	0.04	0.08	0.14	0.23	0.32	0.44
		72	0.02	0.07	0.15	0.27	0.43	0.61	0.83
36	44	72	0.01	0.04	0.08	0.14	0.23	0.32	0.44
		108	0.02	0.06	0.14	0.26	0.40	0.58	0.78
48	56	96	0.01	0.04	0.08	0.14	0.23	0.32	0.44
		144	0.02	0.06	0.14	0.24	0.38	0.54	0.74
60	68	120	0.01	0.04	0.08	0.14	0.23	0.32	0.44
		180	0.01	0.06	0.13	0.22	0.35	0.50	0.69

Generated Noise (GN)

@ 3 sq.ft. face area

Length (in.)	Face Velocity (ft. per min)	Octave Band - Hz/Generated Noise (dB re 10^{-12} watts)							
		63	125	250	500	1000	2000	4000	8000
All	- 5000	73	66	61	70	69	67	68	66
	- 3000	60	53	49	58	56	56	52	46
	+ 3000	59	52	49	57	53	53	50	44
	+ 5000	72	65	61	69	66	64	66	64

GN correction chart at right must be used to correct GN to other face areas. →

Face Area (sq.ft.)	1.5	3	6	12	24	48
dB	-3	0	+3	+6	+9	+12

CERTIFIED PERFORMANCE DATA

VIBRO-ACOUSTICS®
A Swegon Group company

CFMB-UHV-F1

Circular Film MoldBlock
Ultra high velocity silencer
(<7000 fpm)

How to Specify Example:

24 X **CFMB-UHV-F1** X **72**

- **24** — Duct Connection Size
- **CFMB-UHV-F1** — Silencer Model
- **72** — Silencer Length

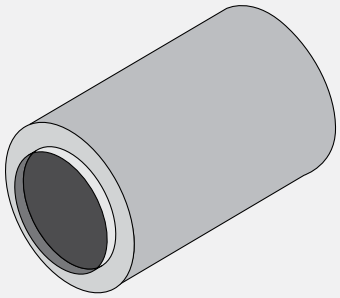

Insertion Loss (IL)

+ : "forward flow" where noise & airflow move in same direction (e.g. supply side)

- : "reverse flow" where noise & airflow move in opposite directions (e.g. return side)

DC Size - Duct Connection Size (in.)

SL - Silencer Length (in.)

FV - Face Velocity (ft. per min)

SO Dia. - Silencer Outer Diameter (in.)

See Silencer Selection Instructions. DIL above 50dB may be limited due to noise flanking around the silencer or along the duct walls. If more than 50dB DIL is required, contact your local Vibro-Acoustics representative or call **1-800-565-8401**.

DC Size (in.)	SL (in.)	FV (ft. per min)	Octave Band - Hz/Dynamic Insertion Loss (dB)							
			63	125	250	500	1000	2000	4000	8000
12	24	- 6000	3	4	9	11	10	11	8	3
		+ 6000	0	1	5	8	13	15	10	6
24	48	- 6000	6	9	12	14	10	6	7	2
		+ 6000	3	7	9	12	13	10	9	5
36	72	- 6000	7	10	14	14	7	5	6	1
		+ 6000	4	8	11	11	10	9	8	4
48	96	- 6000	9	13	16	13	4	4	5	1
		+ 6000	6	10	12	10	7	8	7	3
60	120	- 6000	9	13	17	10	3	4	5	1
		+ 6000	6	10	13	7	6	8	7	3

DC Size (in.)	SL (in.)	FV (ft. per min)	Octave Band - Hz/Dynamic Insertion Loss (dB)							
			63	125	250	500	1000	2000	4000	8000
12	36	- 6000	4	5	12	16	16	17	14	6
		+ 6000	1	3	9	13	19	21	16	9
24	72	- 6000	7	12	17	21	16	9	10	4
		+ 6000	4	9	13	18	19	13	12	7
36	108	- 6000	10	16	21	19	11	8	9	3
		+ 6000	7	13	18	17	14	12	11	6
48	144	- 6000	10	17	23	19	7	7	7	3
		+ 6000	7	14	19	16	10	11	9	5
60	180	- 6000	11	20	24	14	6	7	7	1
		+ 6000	9	17	20	12	9	11	9	4

Pressure Drop (PD)

Pressure drops are reported in accordance with ASTM E477 methods and are based upon **ideal** flow conditions (5 diameters of straight duct on silencer inlet and 10 on outlet). Less than ideal conditions will result in an increase in pressure drop due to System Effects. See Silencer System Effects Data.

☐ Acceptable (0 - 0.35")

▒ Caution (>0.35") Pressure Drop may be too high for certain applications

DC Size (in.)	SO Dia. (in.)	SL (in.)	Face Velocity (ft. per min) / Pressure Drop (in.w.g.)						
			2000	3000	4000	5000	6000	7000	8000
12	28	24	0.01	0.03	0.04	0.07	0.10	0.14	0.18
		36	0.02	0.04	0.07	0.11	0.15	0.21	0.27
24	40	48	0.01	0.02	0.03	0.05	0.08	0.10	0.13
		72	0.01	0.03	0.05	0.08	0.12	0.16	0.20
36	52	72	0.01	0.02	0.03	0.05	0.07	0.09	0.12
		108	0.01	0.03	0.04	0.07	0.10	0.14	0.18
48	64	96	0.01	0.02	0.03	0.05	0.07	0.10	0.13
		144	0.01	0.03	0.05	0.08	0.11	0.15	0.19
60	76	120	0.01	0.02	0.03	0.05	0.07	0.09	0.12
		180	0.01	0.03	0.04	0.07	0.10	0.14	0.18

Generated Noise (GN)

@ 3 sq.ft. face area

Length (in.)	Face Velocity (ft. per min)	Octave Band - Hz/Generated Noise (dB re 10^{-12} watts)							
		63	125	250	500	1000	2000	4000	8000
All	- 7000	81	74	69	76	77	77	66	63
	- 5000	71	64	59	66	67	67	56	53
	+ 5000	70	63		65	64	64	54	51
	+ 7000	80	73	69	75	74	74	64	51

GN correction chart at right must be used to correct GN to other face areas. →

Face Area (sq.ft.)	1.5	3	6	12	24	48
dB	-3	0	+3	+6	+9	+12

CFMB-UHV-F2

Circular Film MoldBlock
Ultra high velocity silencer
(<7000 fpm)

How to Specify Example:

24 X **CFMB-UHV-F2** X **72**

- **24** — Duct Connection Size
- **CFMB-UHV-F2** — Silencer Model
- **72** — Silencer Length

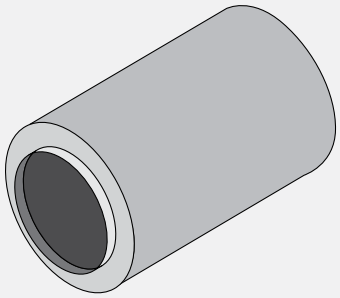

Insertion Loss (IL)

+ : "forward flow" where noise & airflow move in same direction (e.g. supply side)

- : "reverse flow" where noise & airflow move in opposite directions (e.g. return side)

DC Size - Duct Connection Size (in.)

SL - Silencer Length (in.)

FV - Face Velocity (ft. per min)

SO Dia. - Silencer Outer Diameter (in.)

See Silencer Selection Instructions. DIL above 50dB may be limited due to noise flanking around the silencer or along the duct walls. If more than 50dB DIL is required, contact your local Vibro-Acoustics representative or call **1-800-565-8401**.

DC Size (in.)	SL (in.)	FV (ft. per min)	Octave Band - Hz/Dynamic Insertion Loss (dB)							
			63	125	250	500	1000	2000	4000	8000
12	24	- 6000	2	3	10	15	10	11	8	3
		+ 6000	0	1	5	8	13	15	10	6
24	48	- 6000	3	6	11	14	10	6	7	2
		+ 6000	2	4	8	12	13	10	9	5
36	72	- 6000	4	7	12	14	7	5	6	1
		+ 6000	3	5	9	11	10	9	8	4
48	96	- 6000	5	9	14	13	4	4	5	1
		+ 6000	3	7	11	10	7	8	7	3
60	120	- 6000	5	9	15	10	3	4	5	1
		+ 6000	3	7	12	7	6	8	7	3

DC Size (in.)	SL (in.)	FV (ft. per min)	Octave Band - Hz/Dynamic Insertion Loss (dB)							
			63	125	250	500	1000	2000	4000	8000
12	36	- 6000	3	3	11	16	16	17	14	6
		+ 6000	1	2	8	13	19	21	16	9
24	72	- 6000	4	8	15	21	16	9	10	4
		+ 6000	3	6	12	18	19	13	12	7
36	108	- 6000	6	10	18	19	11	8	9	3
		+ 6000	4	9	15	17	14	12	11	6
48	144	- 6000	6	11	20	19	7	7	7	3
		+ 6000	4	10	17	16	10	11	9	5
60	180	- 6000	7	13	21	14	6	7	7	1
		+ 6000	5	11	18	12	9	11	9	4

Pressure Drop (PD)

Pressure drops are reported in accordance with ASTM E477 methods and are based upon **ideal** flow conditions (5 diameters of straight duct on silencer inlet and 10 on outlet). Less than ideal conditions will result in an increase in pressure drop due to System Effects. See Silencer System Effects Data.

☐ Acceptable (0 - 0.35")

▒ Caution (>0.35") Pressure Drop may be too high for certain applications

DC Size (in.)	SO Dia. (in.)	SL (in.)	Face Velocity (ft. per min) / Pressure Drop (in.w.g.)						
			2000	3000	4000	5000	6000	7000	8000
12	28	24	0.01	0.03	0.05	0.08	0.11	0.15	0.19
		36	0.02	0.04	0.06	0.10	0.14	0.20	0.26
24	40	48	0.01	0.02	0.03	0.05	0.07	0.10	0.13
		72	0.01	0.04	0.06	0.10	0.14	0.20	0.26
36	52	72	0.01	0.02	0.03	0.05	0.07	0.10	0.13
		108	0.01	0.03	0.05	0.08	0.11	0.15	0.19
48	64	96	0.01	0.02	0.03	0.05	0.07	0.10	0.13
		144	0.01	0.03	0.05	0.08	0.11	0.15	0.19
60	76	120	0.01	0.02	0.03	0.05	0.07	0.10	0.13
		180	0.01	0.03	0.05	0.08	0.11	0.15	0.19

Generated Noise (GN)

@ 3 sq.ft. face area

Length (in.)	Face Velocity (ft. per min)	Octave Band - Hz/Generated Noise (dB re 10^{-12} watts)							
		63	125	250	500	1000	2000	4000	8000
All	- 7000	81	74	69	76	77	77	66	63
	- 5000	71	64	59	66	67	67	56	53
	+ 5000	70	63		65	64	64	54	51
	+ 7000	80	73	69	75	74	74	64	61

GN correction chart at right must be used to correct GN to other face areas. →

Face Area (sq.ft.)	1.5	3	6	12	24	48
dB	-3	0	+3	+6	+9	+12

AP-MB

Acoustical Plenum
Mol**dB**Lock Media™

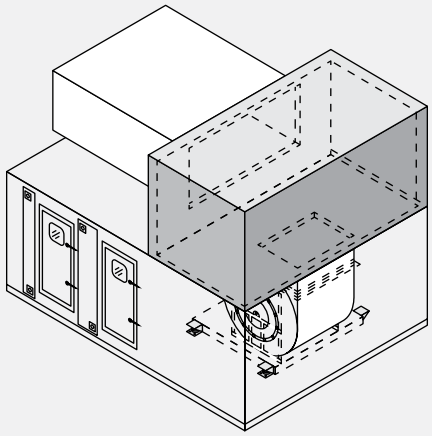

Description

VIBRO-ACOUSTICS® AP-MB SILENCERS are expansion chambers which use a highly effective sound absorption material, Mol**dB**lock Media™, that is inherently resistant to the growth of mold, mildew and fungi. Mol**dB**lock Media™ is an environmentally friendly, Class A building material that is made from 100% natural fiber and does not contain any glass fiber. The most common lining thickness is 4" (100mm) for fan noise control. Thicker treatment of 6" (150mm) or even 8" (200mm) is more effective in the low frequency range. Intake AP-MB silencers may enclose a fan and include multiple inlet or discharge openings. Fan, coil or filter access via removable panels, panel sections or doors may be provided. Fan discharge AP-MB silencers may provide multiple discharge take-offs in varying directions.

Applications

> Wherever glass fiber is not acceptable in duct and air handling systems
> As a superior alternative to glass fiber filled Acoustical Plenum silencers whenever mold, mildew or fungi growth is of concern such as in schools, hospitals, office buildings, etc.
> For low frequency attenuation
> Integral to or in conjunction with air handling units
> When the noise needs to be contained at the source
> To help quiet noisy fan rooms

Features and Benefits

> **Inhibits Microbial Growth:** Every natural fiber used to manufacture MoldBlock Media™ is individually treated with an EPA registered, non-toxic, anti-microbial agent that offers excellent protection from mold, mildew and fungi. Since each fiber is individually treated, secondary manufacturing processes will not disturb or degrade the mold inhibiting qualities that occur when a material is only surface coated.

> **IAQ Friendly:** MoldBlock Media™ does not produce any harmful airborne particles that can permeate into HVAC systems and the surrounding environment causing health concerns.

> **No Off-Gassing:** Contains no formaldehydes, phenolic resins or other chemicals that can cause various reactions, irritations and health concerns.

> **LEED and Green Building rating System Compatible:** The use of MoldBlock Media™ successfully contributes to earning credits in several of the USGBC's LEED Ratings program criteria.

> **Environmentally Safe / Friendly:** MoldBlock Media™'s natural fibers are 100% recyclable, reducing landfill waste. The manufacturing process of MoldBlock Media™ requires a minimal amount of energy to manufacture aiding the environment with energy conservation and a reduction in pollution.

> **Acoustically equivalent to fiberglass:** HVAC silencers and acoustic panels containing MoldBlock Media™ have equivalent acoustical and aerodynamic performance to the same products that utilize fiberglass.

> Available in factory assembled or "knock-down" construction Panel connections may be "tongue and groove" (for strength), "H-section" or "internal flange butt" type (for ease of panel removal)

> Various panel sizes and thicknesses

> Good quality seals to resist moisture, air and noise leakage

> Made in sections to fit ceiling space and can incorporate notch-outs to facilitate cross-over beams, pipes, ducts, etc.

> Factory designed and manufactured removable panels, access sections, windows and doors

> Thick panel construction (4" (100mm) or greater) available for extra low frequency attenuation

> Heavier gauge or composite construction available to minimize breakout noise

> Can be selected to suit the acoustic, space or energy-cost requirements

Comparison of Features

Feature	MoldBlock Media™	Fiberglass
Individual Fibers Treated with Anti-Microbial Agent	Yes	No
Made from Natural Fibers	Yes	No
Mostly Recycled Content	Yes	No
No Off-Gassing or VOC Concerns	Yes	No
Environmentally Friendly	Yes	No
Does Not Contain Formaldehyde	Yes	No
Reduces Indoor Air Quality Issues	Yes	No
Requires Less Energy to Manufacture	Yes	No
No Itch / Irritation	Yes	No

Cautions/When Not to Use AP-MB Silencers

When absorptive media of any type is not acceptable. For these critical applications consider Vibro-Acoustics® No-Media Silencers which are void of any fibrous material. (No-Media AP silencers generally have lower insertion loss performance.)

Physical Properties (of MoldBlock Media™)

Properties	Test	Method
Surface Burning Characteristics (Fire Hazard Classification)	Flame Spread 25 (Class 1) Smoke Developed 50 (Class 1)	ASTM E 84 UL 723
Corrosion Resistance	Pass	ASTM C 739
Fungi Resistance	Pass – No Growth	ASTM C 739
Bacteria Resistance	Pass – No Growth	ASTM C 739

Silencer Selection and Location

Vibro-Acoustics AP-MB silencers need to be carefully selected to optimize performance. Call **1-800-565-8401** for custom selections and proposal drawings by our application engineers.

Standard Construction Features

> Solid galvanized skin
> Perforated galvanized liner
> MoldBlock Media™ under minimum 15% compression with thickness usually ranging from 2–8" (50–200mm) depending on acoustic performance required and space available
> Panel connection type available as "tongue and groove", "H-section" or "internal flange butt"
> Internal stiffening to panel

Special Constructions Options

> Heavier gauge skins and perforated metal
> Special materials e.g. stainless steel, aluminum
> Access doors, openings
> Removable panels or panel sections
> Windows
> High transmission loss (HTL) construction to prvent breakout/breakin noise
> Aerodynamic, acoustical splitters
> Special finishes
> Floor gratings
> Structural support systems (hanging or floor mounted)
> Integration of components e.g. filter racks, coil racks

To Specify (for inclusion in any HVAC silencer or Acoustic Plenum specification)

Acoustic Media: Media shall be Mol**dB**lock Media™ containing 100% natural cotton fibers treated with an EPA registered, non-toxic borate solution, "flash dried" to actively inhibit the growth of mold, mildew, bacteria and fungi. Media shall not contain any formaldehydes, phenolic resins or Volatile Organic Compounds (VOC's) that can off-gas and/or cause health concerns. Media shall be 100% recyclable. Media shall comply with UL181 and NFPA 90A. Mol**dB**lock Media™ shall be packed with a minimum of 15% compression during silencer assembly. Media shall not cause or accelerate corrosion of aluminum or steel. Glass fiber and rockwool are not acceptable alternates.

PRODUCT SHEET

VIBRO-ACOUSTICS®
A Swegon Group company

MoldBLock Media™

Description

VIBRO-ACOUSTICS® MOLDBLOCK MEDIA™ is ahighly effective sound absorption material that is inherently resistant to the growth of mold, mildew and fungi. It is specially designed for use in HVAC noise control products such as HVAC silencers and acoustic panels. Mol**dBl**ock Media™ is an environmentally friendly, Class A building material that is made from 100% natural fiber and does not contain any glass fiber.

Features and Benefits

> **Inhibits Microbial Growth:** Every natural fiber used to manufacture Mol**dB**lock Media™ is individually treated with an EPA registered, non-toxic, anti-microbial agent that offers excellent protection from mold, mildew and fungi. Since each fiber is individually treated, secondary manufacturing processes will not disturb or degrade the mold inhibiting qualities that occur when a material is only surface coated.

> **IAQ Friendly:** Mol**dB**lock Media™ does not produce any harmful airborne particles thatcan permeate into HVAC systems and the surrounding environment causing health concerns.

> **No Off-Gassing:** Contains no formaldehydes, phenolic resins or other chemicals that can cause various reactions, irritations and health concerns.

> **LEED and Green Building Rating System Compatible:** The use of Mol**dB**lock Media™ successfully contributes to earning credits in several of the USGBC's LEED Ratings program criteria.

> **Environmentally Safe / Friendly:** Mol**dB**lock Media™'s natural fibers are 100% recyclable, reducing landfill waste. The manufacturing process of Mol**dB**lock Media™ requires a minimal amount of energy to manufacture aiding the environment with energy conservation and a reduction in pollution.

> **Acoustically equivalent to fiberglass:** HVAC silencers and acoustic panels containing Mol**dB**lock Media™ have equivalent acoustical and aerodynamic performance to the same products that utilize fiberglass.

Applications

> For use in HVAC duct silencers and acoustic panels as a superior alternative to glass fiber whenever mold, mildew or fungi growth is of concern such as in schools, hospitals, office buildings, etc. All Vibro-Acoustics silencer configurations and sizes are available using Mol**dB**lock Media™. Vibro-Acoustics models are as follows: RMB, CMB, REMB, TMB, EX-RMB, EX-REMB, AC-MB, AP-MB, SRMB, ALMB and CTMB.

> For critical applications consider Vibro-Acoustics® No-Media Silencers which are void of any fibrous material. (No-Media silencers generally have lower insertion loss performance for a given length and pressure drop. Thus longer silencer lengths are usually required to achieve similar acoustic performance.)

Comparison of Features

Feature	MoldBlock Media™	Fiberglass
Individual Fibers Treated with Anti-Microbial Agent	Yes	No
Made from Natural Fibers	Yes	No
Mostly Recycled Content	Yes	No
No Off-Gassing or VOC Concerns	Yes	No
Environmentally Friendly	Yes	No
Does Not Contain Formaldehyde	Yes	No
Reduces Indoor Air Quality Issues	Yes	No
Requires Less Energy to Manufacture	Yes	No
No Itch / Irritation	Yes	No

Physical Properties (of MoldBlock Media™)

Properties	Test	Method
Surface Burning Characteristics (Fire Hazard Classification)	Flame Spread 25 (Class 1) Smoke Developed 50 (Class 1)	ASTM E 84 UL 723
Corrosion Resistance	Pass	ASTM C 739
Fungi Resistance	Pass – No Growth	ASTM C 739
Bacteria Resistance	Pass – No Growth	ASTM C 739

Silencer Selection and Location

Vibro-Acoustics offers multiple selection methods. For Vibro-Acoustics Full Service complete analysis, call **1-800-565-8401**.

To Specify (for inclusion in any HVAC silencer or Acoustic Plenum specification)

Acoustic Media: Media shall be Mol**dB**lock Media™ containing 100% natural cotton fibers treated with an EPA registered, non-toxic borate solution, “flash dried” to actively inhibit the growth of mold, mildew, bacteria and fungi. Media shall not contain any formaldehydes, phenolic resins or Volatile Organic Compounds (VOC’s) that can off-gas and/or cause health concerns. Media shall be 100% recyclable. Media shall comply with UL181 and NFPA 90A. Mol**dB**lock Media™ shall be packed with a minimum of 15% compression during silencer assembly. Media shall not cause or accelerate corrosion of aluminum or steel. Glass fiber and rockwool are not acceptable alternates.

MoldBLock Media™ Silencers

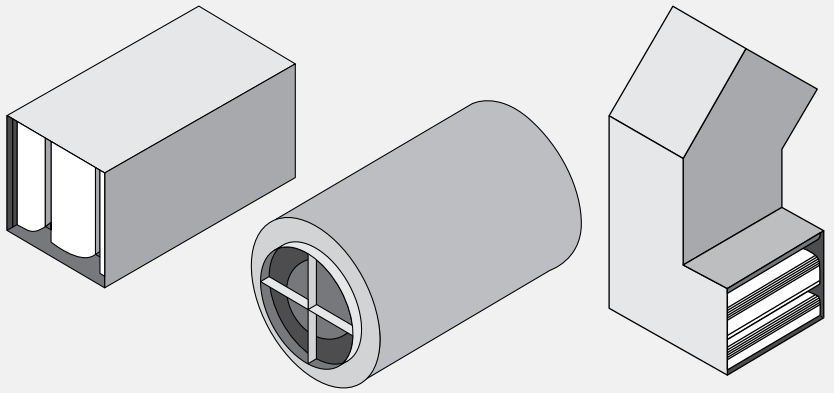

Description

VIBRO-ACOUSTICS® MOLDBLOCK MEDIA™ SILENCERS use a highly effective sound absorption material, Mol**dB**lock Media™, that is inherently resistant to the growth of mold, mildew and fungi. Mol**dB**lock Media™ is an environmentally friendly, Class A building material that is made from 100% natural fiber and does not contain any glass fiber.

Model Names

Vibro-Acoustics® Mol**dB**lock Media™ Silencers are available in all configurations, including:

Configuration	Model
Rectangular (straight)	RMB
Rectangular Elbow	REMB
Circular	CMB
Transitional	TMB
External Media	EX-RMB, EX-REMB
Axial Cone	AC-MB
Rectangular Low Pressure Drop	RLP-MB
Circular Low Pressure Drop	CLP-MB
Acoustic Plenum	AP-MB
Short Rectangular	SRMB
Acoustical Louver	AL-MB

Applications

> Wherever glass fiber is not acceptable in duct and air handling systems

> As a superior alternative to glass fiber filled silencers whenever mold, mildew or fungi growth is of concern such as in schools, hospitals, office buildings, etc.

> In supply, return and exhaust ductwork

> In fan plenums and air handling units (both supply and return)

> On cooling towers, air cooled chillers, etc.

Features and Benefits

> Inhibits Microbial growth: Every natural fiber used to manufacture Mol**dB**lock Media™ is individually treated with an EPA registered, non-toxic, anti-microbial agent that offers excellent protection from mold, mildew and fungi. Since each fiber is individually treated, secondary manufacturing processes will not disturb or degrade the mold inhibiting qualities that occur when a material is only surface coated.

> **IAQ friendly:** Mol**dB**lock Media™ does not produce any harmful airborne particles that can permeate into HVAC systems and the surrounding environment causing health concerns.

> **No Off-gassing:** Contains no formaldehydes, phenolic resins or other chemicals that can cause various reactions, irritations and health concerns.

> **LEEDand green Building rating System Compatible:** The use of Mol**dB**lock Media™ successfully contributes to earning credits in several of the USGBC's LEED Ratings program criteria.

> **Environmentally Safe / friendly:** Mol**dB**lock Media™'s natural fibers are 100% recyclable, reducing landfill waste. The manufacturing process of Mol**dB**lock Media™ requires a minimal amount of energy to manufacture aiding the environment with energy conservation and a reduction in pollution.

> **Acoustically equivalent to fiberglass:** HVAC silencers and acoustic panels containing Mol**dB**lock Media™ have equivalent acoustical and aerodynamic performance to the same products that utilize fiberglass.

Comparison of Features

Feature	MoldBlock Media™	Fiberglass
Individual Fibers Treated with Anti-Microbial Agent	Yes	No
Made from Natural Fibers	Yes	No
Mostly Recycled Content	Yes	No
No Off-Gassing or VOC Concerns	Yes	No
Environmentally Friendly	Yes	No
Does Not Contain Formaldehyde	Yes	No
Reduces Indoor Air Quality Issues	Yes	No
Requires Less Energy to Manufacture	Yes	No
No Itch / Irritation	Yes	No

Cautions/When Not to Use MoldBlock Media Silencers

When absorptive media of any type is not acceptable. For these critical applications consider Vibro-Acoustics® No-Media Silencers which are void of any fibrous material. (No-Media silencers generally have lower insertion loss performance for a given length and pressure drop. Thus longer silencer lengths are usually required to achieve similar acoustic performance.)

Physical Properties (of MoldBlock Media™)

Properties	Test	Method
Surface Burning Characteristics (Fire Hazard Classification)	Flame Spread 25 (Class 1) Smoke Developed 50 (Class 1)	ASTM E 84 UL 723
Corrosion Resistance	Pass	ASTM C 739
Fungi Resistance	Pass – No Growth	ASTM C 739
Bacteria Resistance	Pass – No Growth	ASTM C 739

Silencer Selection and Location

Vibro-Acoustics offers multiple selection methods. For Vibro-Acoustics Full Service complete analysis, call **1-800-565-8401**.

To Specify (for inclusion in any HVAC silencer or Acoustic Plenum specification)

Acoustic Media: Media shall be Mol**dB**lock Media™ containing 100% natural cotton fibers treated with an EPA registered, non-toxic borate solution, "flash dried" to actively inhibit the growth of mold, mildew, bacteria and fungi. Media shall not contain any formaldehydes, phenolic resins or Volatile Organic Compounds (VOC's) that can off-gas and/or cause health concerns. Media shall be 100% recyclable. Media shall comply with UL181 and NFPA 90A. Mol**dB**lock Media™ shall be packed with a minimum of 15% compression during silencer assembly. Media shall not cause or accelerate corrosion of aluminum or steel. Glass fiber and rockwool are not acceptable alternates.

VIBRO-ACOUSTICS®
A Swegon Group company

AP-MB

Acoustic Panels - MoldBlock
Tongue & Groove

Performance

> Construction: 4” Thick, 18 ga solid galvanized steel outside sheet, 22 ga perforated galvanized steel inside sheet, Mol**dB**lock Media™ insulation

Octave Band	63	125	250	500	1000	2000	4000	8000
Transmission Loss	18	21	27	37	48	54	54	54
Absorption	-	0.7	0.9	0.99	0.99	0.9	0.9	-

> Construction: 2” Thick, 18 ga solid galvanized steel outside sheet, 22 ga perforated galvanized steel inside sheet, Mol**dB**lock Media™ insulation

Octave Band	63	125	250	500	1000	2000	4000	8000
Transmission Loss	15	20	24	37	48	54	54	54
Absorption	-	0.3	0.7	0.9	0.99	0.9	0.8	-

Advantages

> Mol**dB**lock Media™ inhibits microbial growth
> IAQ Friendly, no off-gassing
> LEED and Green Building Rating System Compatible
> Panels are self-aligning and interlocking
> Easily installed in minimum of time
> Good quality seal – resists moisture, air and noise leakage
> Excellent installed appearance
> Ideal for long length (strong and low cost)

Applications

> Wherever glass fiber is not acceptable
> As a superior alternate to glass fiber filled Acoustical Panels whenever mold, mildew or fungi growth is of concern such as in schools, hospitals, office buildings, etc.
> Around noisy equipment
> Rooms and booths
> Air handling units and plenums
> Testing facilities
> Plant separating walls
> Barrier walls

Construction

> Roll formed inner and outer skins
> Maximum 16 ga galvanized or stainless steel
> Mol**dB**lock Media™ sandwiched between skins
> Internal stiffening of panel
> Joints 10 thicknesses of metal

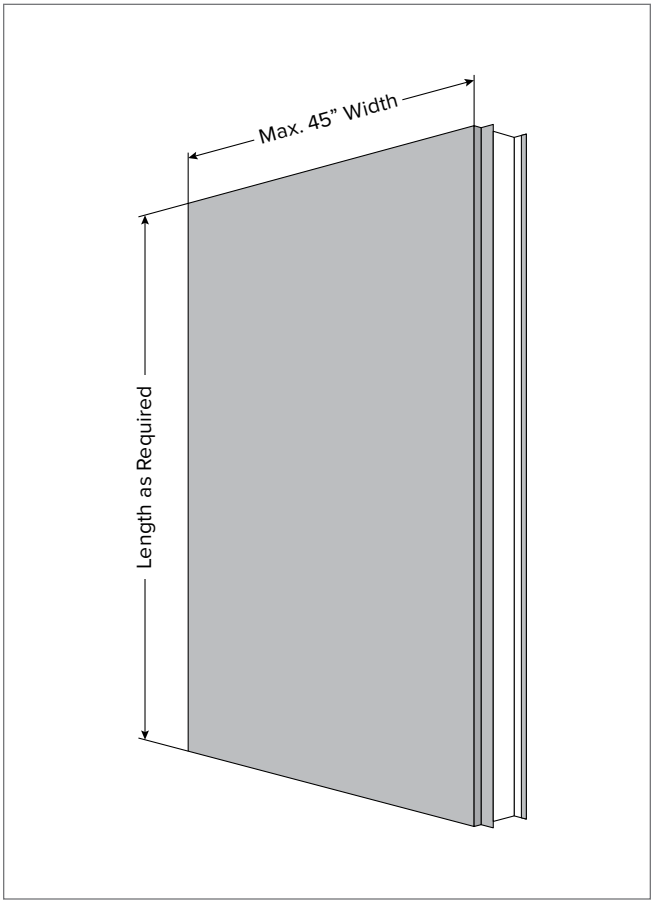

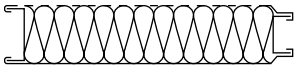

Solid / Perforated

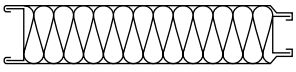

Solid / Solid

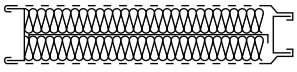

Septum

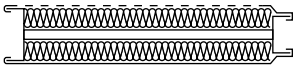

Added Mass Core

HVAC SILENCERS OTHER

VIBRO-ACOUSTICS®
A Swegon Group company

CT

Cross-Talk Silencers

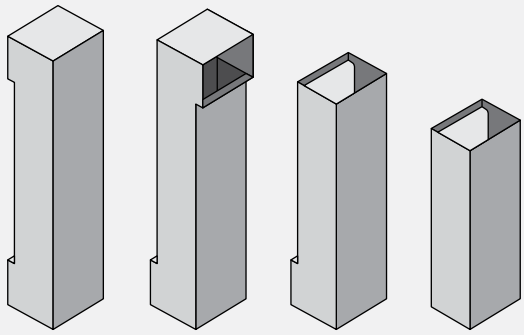

Description

VIBRO-ACOUSTICS' CT SILENCERS are designed to reduce speech intrusion into adjacent rooms via connecting ducts and return and supply air openings. They use acoustic grade glass fiber as the principle sound-absorbing mechanism. Acoustical splitters, sometimes called baffles, are used for optimal mid-frequency range attenuation. Perforated metal protects the glass fiber from erosion by the airflow.

Applications

> Where speech privacy and freedom from distraction is required and airflow is necessary
> For private rooms (e.g. lawyers' and doctors' offices),
> Offices, conference rooms, bathrooms, kitchens, halls
> Typically located in ceilings, ducts, walls and even doors
> Sensitive Compartmented Information Facility (SCIF Rooms)
> Government offices like Police Stations, courthouses etc.
> Military installations

Features and Benefits

> Available in any cross-sectional dimensions to "fit-the-opening"

> Common shapes include straight, elbow, "Z" and "U" configurations

> Special applications available such as light troffer CT silencer

> Standard lengths available: 24" and 30"; custom lengths also available

> Low aerodynamic pressure drop for ease of door opening

> Can be selected to minimize degradation of wall or barrier STC rating

> Can be selected to suit the acoustic, space, or energy-cost requirements

> Construction quality and aerodynamic design optimized to give reliable performance, best acoustics, lowest pressure drop and lowest overall cost

Cautions/When Not to Use CT Silencers

> CT silencers are not intended to substitute for broad-band, high insertion loss silencers

> Not intended for high volume or high velocity airflows

> Pressure drops should be kept below 0.05'' WG to allow for easy opening of doors.

> Some critical applications like music rooms and sensitive Government/military applications may require a thorough analysis. Consider getting the services of a qualified acoustical consultant

Performance Data/Testing

Vibro-Acoustics' 5th generation aero-acoustic laboratory was the first laboratory to be NVLAP accredited (Lab Code 100424-0) for the ASTM E-477 silencer test code. NVLAP is administered by the U.S. Dept. of Commerce.

Silencer Selection

Factors affecting selection include:

> Degree of speech privacy required

> Wall or barrier sound transmission class (STC rating)

> Background noise levels in the receiving room

> Short circuiting of sound paths through doors, holes for piping, electrical services, etc.

> Adjoining opening size, shape and path length

> Airflow rates to permit easy door opening

For the most economical selections call our application engineers at **1-800-565-8401**.

Standard Construction Features

> Galvanized lockformed casing constructed to SMACNA standards

> 3" slip connection at each end

> Aerodynamically shaped, perforated galvanized nose at inlet

> Perforated galvanized splitters

> Splitters filled with acoustic grade glass fiber under minimum 15% compression

Other construction features vary depending on size, type, capacity and pressure of fan. Consult Vibro-Acoustics application engineers for information.

Special Construction Options

> Special materials (e.g. stainless steel, aluminum)

> Grilles or other terminal devices

> Lockable access doors

> Media protection: glass fiber cloth, film liner

> Built in transitions

> RF shielding to block cellular communication

> Screens

> Jail bars to prevent infiltration from adjacent rooms.

> Flexible connectors with HTL cap to break metallic contact between rooms

> For details of above and more special options see Special Construction Options.

VIBRO-ACOUSTICS®
A Swegon Group company

SRD

Short Rectangular
Dissipative Silencers

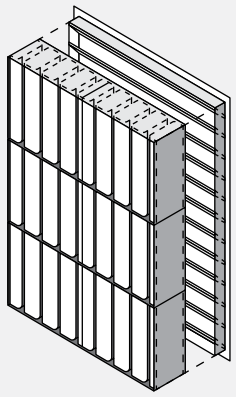

Description

VIBRO-ACOUSTICS' SRD silencers are available in any length from 6" to 36" and use acoustic grade glass fiber as the principle sound-absorbing mechanism. Acoustical splitters, sometimes called baffles, are used for broad-band attenuation. Perforated metal protects the glass fiber from erosion by the airflow.

The splitters vary in quantity and thickness, and air passages also vary in width. They are aerodynamically shaped to minimize pressure drop.

Applications

> Where there is not enough duct length to fit in
> Standard length straight silencers
> Behind architectural louvers
> In fan plenums and air handling units

Features and Benefits

> Available in any cross-sectional dimensions to "fit-the-duct" or "fit-the-opening"

> Modular unit sizes to fit ducts and air handling units without using transitions or large blank-off sections

> Length available from 6" to 36"

> Can be used in conjunction with architectural louvers to improve performance over that of an acoustical louver.

> Can be selected to suit the acoustic, space, or energy-cost requirements

> Construction quality and aerodynamic design optimized to give reliable performance, best acoustics, lowest pressure drop and lowest overall cost.

> Splitters can be aligned vertically or horizontally to minimize extra pressure losses due to inlet or discharge flow conditions

Cautions/When Not to Use SRD Silencers

> SRD silencers have limited performance due to length limitation of 36''. When more attenuation is required see **Fan Silencers**

Performance Data/Testing

Vibro-Acoustics' 5th generation aero-acoustic laboratory was the first laboratory to be NVLAP accredited (Lab Code 100424-0) for the ASTM E-477 silencer test code. NVLAP is administered by the U.S. Dept. of Commerce.

Silencer Selection and location

Vibro-Acoustics' SRD Silencers need to be carefully selected to optimize performance. Call **1-800-565-8401** for custom selections by our application engineers.

Standard Construction Features

> Galvanized, lockformed casing constructed to SMACNA standards

> 1" slip connection at each end

> Aerodynamically shaped, galvanized nose at inlet

> Galvanized gap plates between splitters to ensure close dimensional tolerances at air passages

> Perforated galvanized splitters

> Splitters filled with acoustic grade glass fiber under minimum 15% compression

Special Construction Options

> Special materials e.g. stainless steel, aluminum

> Grilles or other terminal devices

> Access doors

> Media protection: glass fiber cloth, film liner

> Built in transitions

> For details of above and more special options see Special Construction Options.

EX

EX-RD/EX-RFL/ EX-RNM/ EX-RED/EX-REFL/ EX-RENM
External Media Silencers

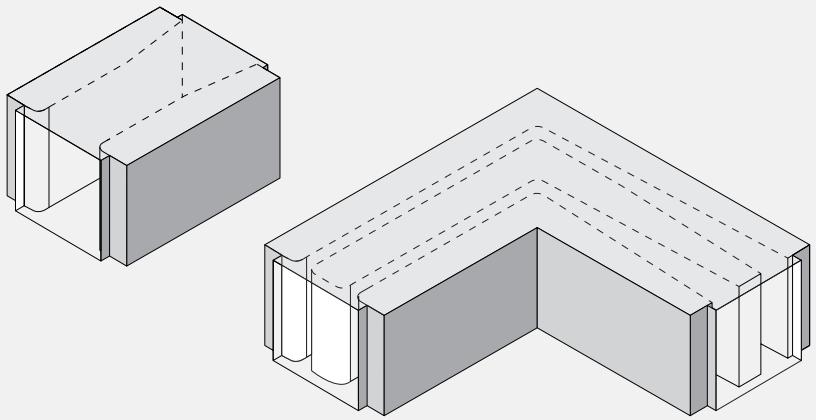

Description

VIBRO-ACOUSTICS' EX MODEL SILENCERS are designed with absorptive materials are partially outboard of the airstream. This increases the silencer's air passage. EX-RD and EX-RED silencers use acoustic grade glass fiber protected by perforated metal. EX-RFL and EX-REFL silencers incorporate a film liner between the perforated metal and the glass fiber. EX-RNM and EX-RENM silencers do not use glass fiber and are completely void of any fill material.

Applications

> High duct velocity systems

> Average duct velocity systems when more low frequency insertion loss is required at no additional pressure drop

> On the receiver side of valves, dampers, terminal boxes, etc.

> This is used in cases where a silencer with the desired acoustic performance has an unacceptable pressure drop. By the sound absorbing medium out of the airstream, the pressure drop is lowered without compromising the acoustic performance.

Features and Benefits

> External acoustical media allows lower pressure drops without degrading the silencer's low frequency insertion loss

> Available in any cross-sectional dimensions to "fit-the-duct"

> Can incorporate notches to facilitate cross-over beams, pipes, ducts, etc.

> Can be selected to suit the acoustic, space, or energy-cost requirements

> Construction quality and aerodynamic design optimized to give reliable performance, best acoustics, lowest pressure drop and lowest overall cost

> Available in Dissipative (EX-RD and EX-RED), Film Lined (EX-RFL and EX-REFL) and No-Media (EX-RNM and EX-RENM) options

> When break-out noise is of prime concern EX silencers may be appropriate selections. They may require mass/stiffness added to their outer casing. Refer to Silencer Selection Instructions for proper silencer location.

Cautions/When Not to Use EX Silencers

> EX-Casing silencers are wider than the duct cross section, so they may interfere with structural components, services or other elements in the buildings.

Performance Data/Testing

Vibro-Acoustics' 5th generation aero-acoustic laboratory was the first laboratory to be NVLAP accredited (Lab Code 100424-0) for the ASTM E-477 silencer test code. NVLAP is administered by the U.S. Dept. of Commerce.

Silencer Selection and Location

Vibro-Acoustics' EX Silencers need to be carefully selected to optimize performance. Call **1-800-565-8401** for custom selections by our application engineers.

Standard Construction Features

Consult the Standard Construction Features of the Silencer Type using the external acoustic media.

Special Construction Options

> Heavier gauge casings and perforated metal

> Continuously welded casings

> Special materials (e.g. stainless steel, aluminum)

> Flanges

> Access doors

> Media protection: glass fiber cloth

> High transmission loss (HTL) casings to prevent break-out/break-in noise

> Built-in transitions

> Removable splitters

> Flow measuring stations

> For details of above and more special options see Special Construction Options.

CERTIFIED PERFORMANCE DATA

VIBRO-ACOUSTICS®
A Swegon Group company

GD

Grille Dissipative Silencer

How to Specify Example:

48 X **60** **GD-MV** X **4**

Width Height Model Depth

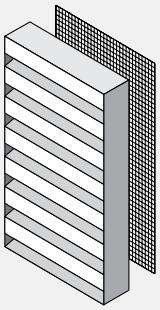

Depth (in.)	Model	Octave Band Transmission Loss (dB)								Face Velocity (fpm) Pressure Drop (in.wg)		
		63	125	250	500	1000	2000	4000	8000	250	350	500
4	GD-LV-4	1	2	3	5	8	10	13	13	0.1	0.2	0.41
	GD-MV-4	1	2	2	4	6	8	10	10	0.07	0.13	0.27
6	GD-LV-6	2	3	4	7	10	12	14	13	0.12	0.24	0.48
	GD-MV-6	2	2	3	5	8	10	11	10	0.08	0.16	0.32

Pressure drop may be too high for most practical applications

Acoustical Performance

Transmission Loss (TL) determined by ASTM E90. Noise Reduction (NR) may be determined as: NR=TL+6. Insertion Loss (IL) may be estimated using: IL=TL+2 for all bands of interest.

Aerodynamic Performance

Free Area and Pressure Drop determined by AMCA Standard 500-L for free inlet and outlet under ideal conditions. System effects due to ducted conditions, low height, or obstructions may increase pressure drop by a factor of 1.5 or higher.

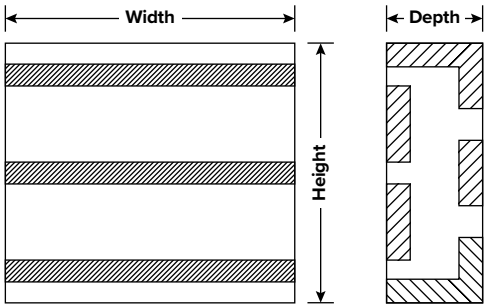

Dimensions

Maximum single piece size: 48” x 120”. For any grille less than 12” high, contact your local Vibro-Acoustics Representative or call **1-800-565-8401** for assistance with product selection due to potentially significantly higher pressure drop values.

Available Options

- Aluminum or Stainless steel
- Flanges as required
- Custom grille shapes and designs for special applications
- Surface preparation and finishing:
  - Mill finish
  - Prime coat
  - Satin coat/galvaneal
  - Baked enamel
  - Anodized (aluminum only)
  - Other finishes available

VIBRO-ACOUSTICS®
A Swegon Group company

HTL

High Transmission Loss Silencers

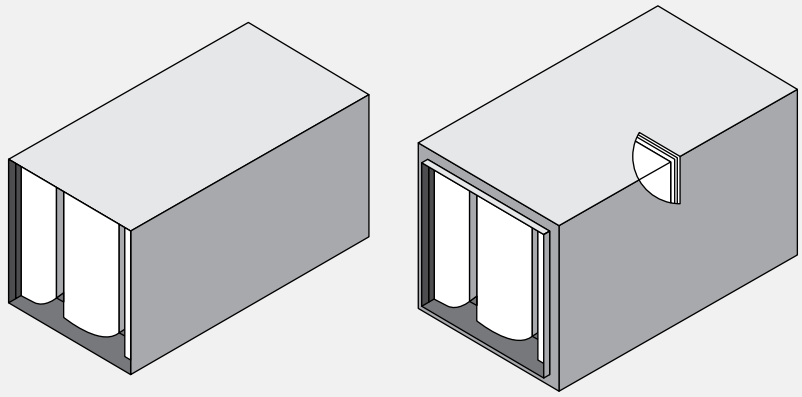

Description

VIBRO-ACOUSTICS' HTL silencers incorporate mass and/or stiffness added to the silencer casing to reduce break-out or break-in noise. The materials are externally applied and completely sealed to the silencer casing in the factory. This ensures quality controlled transmission loss.

HTL construction can be applied to ANY Vibro-Acoustics silencer type including Dissipative, Film Lined, No-Media, Elbow and Transitional Silencers. HTL construction can also be applied to normal ductwork.

Applications

> Wherever break-out or break-in noise is of concern
> When silencers are located in the occupied space
> Under Roof Top Units (both supply and return)
> For silencers and ductwork located in noisy equipment rooms to minimize break-in noise
> When silencers are directly connected to fans or air handling units
> In ductwork passing through sound barriers between noisy and quiet spaces

Features and Benefits

> Externally applied materials to ensure optimal seal and quality controlled transmission loss
> Duct wall construction consists of media, air space, mass and outer protective metal skin, as required, to obtain the specified noise criteria
> Available in any cross-sectional dimensions to "fit-the-duct" one-piece or sectional supply for ease of installation
> Can be selected to suit the acoustic or space requirements
> Can be applied to **any** Vibro-Acoustics' silencer model
> HTL applied in factory vs. application in field ensures the following benefits
  > Better seal to silencer or ductwork
  > Eliminates the need for multiple installation trades
  > For field application
  > Lower overall cost
  > Single source responsibility for noise control product

Cautions/When Not to Use HTL Silencers

> When break-out or break-in noise is not of concern (fan/duct system analysis required) Refer to Silencer Selection Instructions for proper silencer location.

Performance Data/Testing

See Performance Data section.
Vibro-Acoustics' 5th generation aero-acoustic laboratory was the first laboratory to be NVLAP accredited (Lab Code 100424-0) for the ASTM E-477 silencer test code. NVLAP is administered by the U.S. Dept. of Commerce.

Silencer Selection and location

Vibro-Acoustics' HTL Silencers and Ductwork need to be carefully selected to optimize performance. Contact your Vibro-Acoustica' representative or call **1-800-565-8401** for custom selections by our application engineers.

Standard Construction Features

HTL walls are custom designed to meet the system noise criteria requirements. Consult the Standard Construction Features of the Silencer Type to which the HTL walls are to be applied.

Special Construction Options

> Continuously welded casings
> Special materials (e.g. stainless steel, aluminum)
> Flanges
> Access doors
> Built in transitions
> Removable splitters
> Flow measuring stations
> For details of above and more special options see Special Construction Options.

VIBRO-ACOUSTICS®
A Swegon Group company

RLP

RLP-D/RLP-FL/ RLP-NM
Rectangular
Low Pressure Drop
Silencers

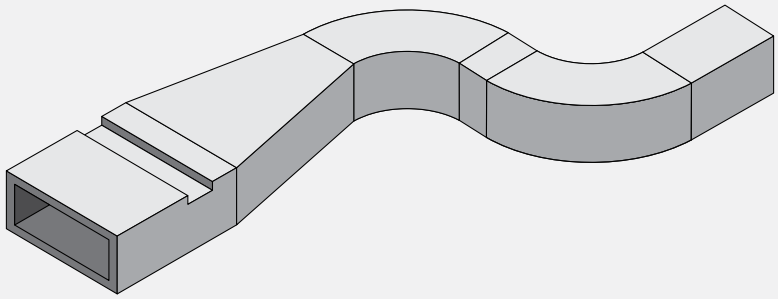

Description

VIBRO-ACOUSTICS' RLP SILENCERS have 100% of the glass fiber or expansion chambers outboard of the airstream. By allowing the silencer outboard dimensions to exceed the duct cross section dimensions, and maintaining internal dimensions equal to the connecting duct dimensions, RLP silencers will have a pressure drop almost equal to empty duct. The difference is only the roughness factor of perforated metal over solid.

RLP silencers can be straight or also include bends and transitions. The most common thickness of acoustic treatment is 4" for noise control. Thicker treatment of 6" or even 8" is more effective in the low frequency range. It is usually applied to all four walls. For higher duct aspect ratios, application to the larger two walls could suffice.

RLP-D silencers use acoustic grade glass fiber protected by perforated metal. The thick media provides excellent attenuation if sufficient length is available at virtually no pressure drop. Glass fiber cloth in addition to the perforated metal prevents glass fiber erosion above 4000 fpm for straight ducts and 2000 fpm at elbows and other fittings.

RLP-FL silencers incorporate a film liner between the perforated metal and the glass fiber. RLP-NM silencers do not use glass fiber and are completely void of any fill material.

Applications

> High duct velocity systems
> When fan system can not tolerate too much pressure drop
> Systems with long duct runs
> When long term energy cost and initial incremental system cost is more important than initial silencing cost
> To save redesign of equipment room when standard silencers can not fit the space
> Where break-out or break-in noise is of concern

Features and Benefits

> Fully external acoustical media allows very low pressure drops

> Available in any cross-sectional dimensions to "fit-the-duct"

> Made in sections to fit ceiling space and can incorporate notch-outs to facilitate cross-over beams, pipes, ducts, etc.

> Can be selected to suit the acoustic, space, or energy cost requirements

> Construction quality and aerodynamic design optimized to give reliable performance, best acoustics, lowest pressure drop and lowest overall cost

> Available in Dissipative (RLP-D and CLP-D), Film Lined (RLP-FL and CLP-FL) and No-Media (RLP-NM and CLP-NM) options

> When break-out noise is of prime concern RLP and CLP silencers may be appropriate selections. They may require mass/stiffness added to their outer casing. Refer to Silencer Selection Instructions for proper silencer location.

Cautions/When Not to Use RLP Silencers

> When there is absolutely no room outside the duct connection size (e.g. tight shafts)

Performance Data/Testing

Vibro-Acoustics' 5th generation aero-acoustic laboratory was the first laboratory to be NVLAP accredited (Lab Code 100424-0) for the ASTM E-477 silencer test code. NVLAP is administered by the U.S. Dept. of Commerce.

Silencer Selection and Location

RLP and CLP Silencers need to be carefully selected to optimize performance. Call **1-800-565-8401** for custom selections by our application engineers.

Special Construction Options

> Heavier gauge casings and perforated metal

> Continuously welded casings

> Special materials e.g. stainless steel, aluminum

> Flanges

> Access doors

> Media protection: glass fiber cloth

> High transmission loss (HTL) casings to prevent break-out/break-in noise

> Built-in transitions

> For details of above and more special options see Special Construction Options.

Standard Construction Features

RLP-D

> Galvanized, lockformed casing constructed to SMACNA standards

> 2” slip connection at each end

> Perforated galvanized liner matching the inside duct cross sectional dimensions

> Acoustic grade glass fiber under minimum 15% compression with thickness usually ranging from 2-8” depending on acoustic performance required and space available

RLP-FL

> Galvanized, lockformed casing constructed to SMACNA standards

> 2” slip connection at each end

> Perforated galvanized liner matching the inside duct cross sectional dimensions

> Acoustic grade glass fiber under minimum 15% compression with thickness usually ranging from 2-8” depending on acoustic performance required and space available

> Glass fiber carefully wrapped in Tedlar film with lap joints away from perforated metal edges to reduce potential tearing of the Tedlar

> 0.5 inch deep corrugated honeycomb “stand-off” spacer sheet placed between the perforated metal and the film

RLP-NM

> Galvanized, lockformed casing constructed to SMACNA standards

> 2” slip connection at each end

> Perforated liner matching the inside duct cross sectional dimensions

> “Tuned” chambers external to the duct cross sectional dimensions no acoustical media

SPECIAL CONSTRUCTION OPTIONS

CONSTRUCTION OPTIONS		PURPOSE	FEATURES
Access Doors	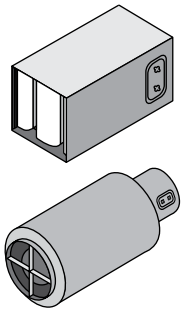	Provide access for silencer inspection, cleaning or resetting of fire damper linkage.	> Size and location to suit project requirements > Insulated to prevent condensation > Quick release latches for easy access
Birdscreen	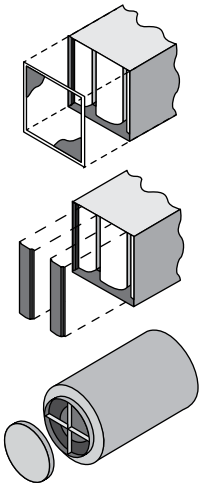	Prevent entrance of foreign objects and debris.	> 1” x 1” x 16 gauge mesh standard > Other mesh sizes to suit project requirements > Permanent or removable attachment
Casing Extension	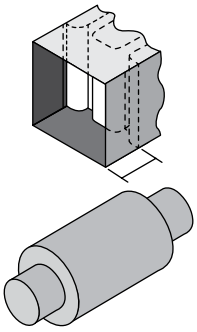	Provide a space between the silencer splitters or centerbody and an adjoining component for improved air flow. Provide a splitter or centerbody-free area for access or inspection through a factory-supplied access door.	Seamless extension of the silencer casing.
Connections - Section-to-Section	SEE INSTALLATION INSTRUCTIONS ON PAGE 77	Provide attachment and sealing for silencer sections.	Connection options are available in the most commonly used types and methods, including “U” strip or drilled flanges and flat bars or rings.

CONSTRUCTION OPTIONS		PURPOSE	FEATURES
Transverse Connections - Silencer-to-Adjoining Components	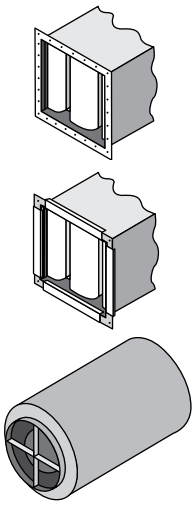	Provide attachment and sealing to adjoining ductwork or components.	Connection options are available for the most commonly used types and methods to suit project requirements, including: > Angle flanges with optional bolt holes > Transverse connection systems.
Flex Connections	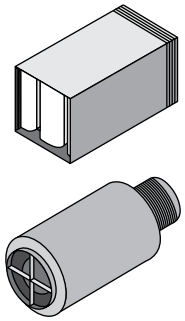	Reduce vibration transmission caused by air moving devices or turbulence to adjoining components.	Flange or slip connections, available materials including neoprene coated fabric and mass-loaded vinyl.
Flow Measuring Station	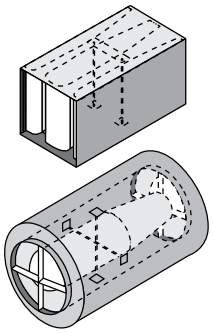	Provides an alternate system location for flow measurement, useful when insufficient space is available for conventional flow stations.	Flow measuring probes are installed in splitter gaps or the annulus area, as required for reliable measurement. Since gap velocities are higher than duct velocities, measurement accuracy is enhanced.
Full Height Splitters	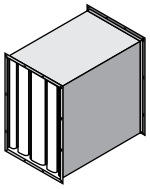	Provides a structural splitter for spanning shafts, reduces the installation cost for plenum silencers by eliminating the need to connect and seal individual silencer sections. Provides an obstruction-free gap.	Uses the shaft or plenum walls as the silencer casing. Factory supplied tracks for accurate splitter positioning.

CONSTRUCTION OPTIONS		PURPOSE	FEATURES
Heavy Duty Construction	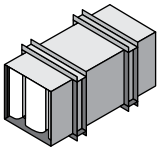	Meet SMACNA construction standards for high pressure applications or for longer-life products.	Heavier gauges, pittsburgh lock or continuously welded casing seams.
High Transmission Loss (HTL) Casing	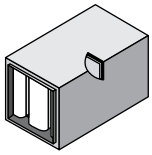	Increase the transmission loss of the silencer casing to prevent breakout or breakin noise.	Composite construction consisting of media, mass layer and outer protective metal skin, as required, to obtain the specified room noise criterion. Where access doors are required in HTL casings, doors are constructed to maintain the effectiveness of the HTL casing.
Materials	316L SS	Materials may be selected for the corrosion resistance required for the internal or external environment.	Various grades of galvanized steel, stainless steel or aluminum.
Media Protection - Glass Fiber Cloth	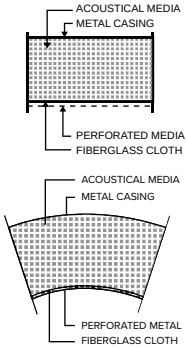	Prevents erosion of the glass fiber media due to high velocity or turbulent air flow. Glass fiber cloth is recommended for all dissipative silencer applications where silencers are in close proximity to air moving devices. Commonly used in clean room and other IAQ applications.	Glass fiber cloth weight has been selected for minimal insertion loss degradation.
Media Protection - Vibar™	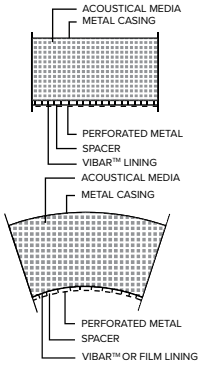	Prevents glass fiber particles from entering the air stream and airborne contaminants from being absorbed in the media. Commonly used in hospital, clean room and other IAQ applications.	Tedlar is supplied with an acoustically transparent spacer to minimize the degradation in insertion loss. Tedlar with spacer is a standard feature of RFL, CFL, and REFL silencers.

VIBRO-ACOUSTICS®
A Swegon Group company

CONSTRUCTION OPTIONS		PURPOSE	FEATURES
One-Piece Construction	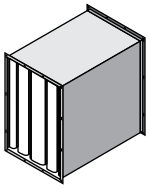	Increase structural rigidity, reduce installation time, reduce crane lifts and provide factory assembly quality.	All noted options may be incorporated.
Removable Splitters and Centerbodies	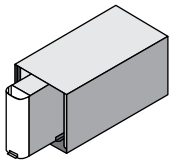 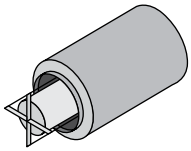	To permit access to adjoining components, periodic cleaning for future replacement.	Splitter tracking and positive fastening for ease of maintenance.
Repackable Silencers	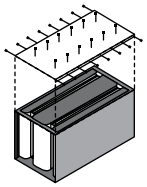 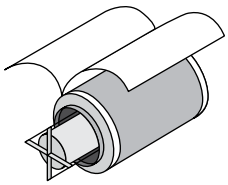	Provides means of media replacement for IAQ concerns or requirements.	Removable panels, removable splitters or centerbodies, access doors and quick release latches available.
Shipping Splits	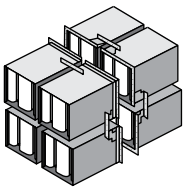 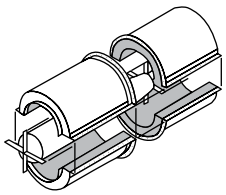	Ship silencer banks in smaller sections to permit building access or reduce section weight as required by site conditions.	Shipping splits can be supplied along the silencer width, height, circumference or length with drilled flanged connections.

CONSTRUCTION OPTIONS		PURPOSE	FEATURES
Special Handling		To meet construction, cleaning and packaging requirements associated with clean room applications.	Degreasing of all steel surfaces prior to fabrication, caulking with specialty sealant, degreasing and cleaning after fabrication, and shrink wrapping and skidding for shipment.
Support Legs/ Mounting Brackets	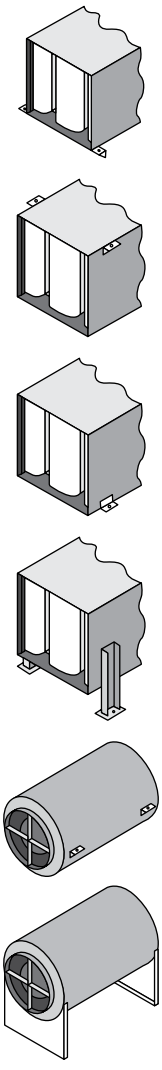	Provide an attachment means for supporting and hanging the silencers.	Location and dimensions of support legs/brackets as required by field conditions.

DUCT SILENCER INSTALLATION GUIDELINES

VIBRO-ACOUSTICS®
A Swegon Group company

> Determine connection type from contract specifications or contractor's practice.

> Prepare inlet and outlet of duct silencer with the companion joint to be used.

> If the silencer is rectangular and has been supplied in more than one single component piece, unitize pieces as shown below. Refer to the silencer submittal to establish pieces required and overall silencer bank dimensions.

> Install silencer in duct system taking care that the direction of airflow indicated on the silencer is the direction of airflow in the duct system.

> In the case of reversible flow fan systems, the airflow arrow should align with the direction of "normal flow".

> Where possible, orient the splitters vertically to help provide structural rigidity.

> Support silencer as specified or as required.

> Use specified caulking or gasket materials at connection to duct system.

Note: Vibro-Acoustics silencer catalog and submittal data have been determined according to ASTM E-477 methods. This test standard requires a minimum of five (5) diameters of straight duct upstream of the silencer and ten (10) diameters of straight duct downstream of the silencer. Locating a silencer in a system with less favorable inlet and discharge conditions will result in increased pressure drops and generated noise due to system effects.

DETAIL 'A'

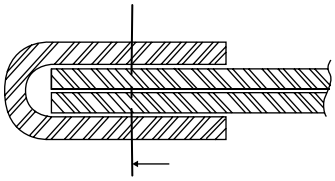

Attachment by tek screw, crimping or button punch

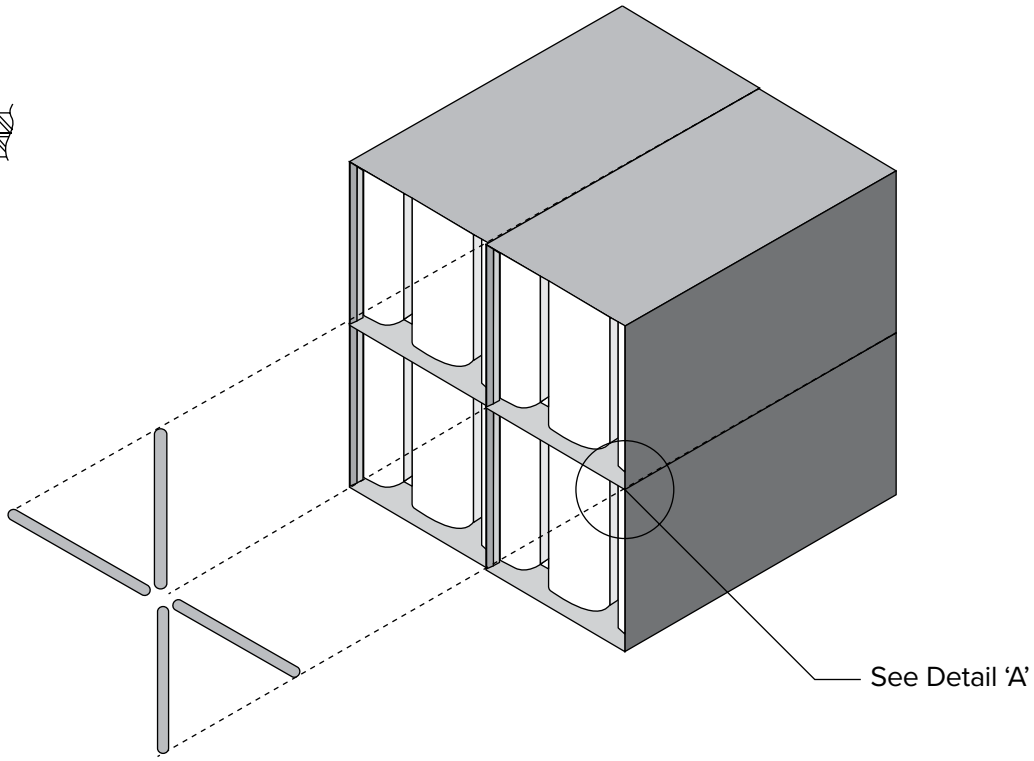

SILENCER SELECTION

INSTRUCTIONS

For general information in HVAC Acoustics, consult the following publications:

> 2017 ASHRAE Fundamentals Handbook, Chapter 8 Sound and Vibration

> 2015 ASHRAE Applications Handbook, Chapter 48 Noise and Vibration Control

> Algorithms for HVAC Acoustics, 1991

> A Practical Guide to Noise and Vibration Control for HVAC Systems, 1991

Before following the procedures below, it may be beneficial to first familiarize yourself with the 18 Common Silencing Problems summarized and illustrated through Silencer Application Solutions (SAS sheets) found in the Application section of the this Guide.

To select a silencer, it is necessary to determine:

1. How much insertion loss (IL) is necessary to achieve the specified room sound criterion
2. How much additional pressure drop (PD) is allowable at the system duct velocity
3. Where the silencer should be located
4. How much silencer airflow generated noise (GN) can be tolerated
5. Silencer type to meet system/application requirements
6. Silencer model to meet IL, PD and GN requirements
7. Silencer construction

1 Insertion Loss Required

EACH DUCT SYSTEM needs to be analyzed separately. All possible sound sources and paths should be considered. Common paths often forgotten include duct break-out noise and equipment noise radiated to the environment through intake or exhaust louvers.

It is critical that the duct system analysis begin at the initial sound source and continue in order, duct element by element, to the occupied space. This will ensure that the noise level can be calculated at any point along the system to help determine if break-out noise and/or airflow generated noise need to be controlled (see below).

The octave band sound power levels of the noise generating elements are summed logarithmically (e.g. main fan or AHU, terminal boxes and airflow generated noise of ductwork, fittings, terminal devices, etc.). The natural attenuation elements, such as ductwork, plenums and fittings, etc. are subtracted. (**See ASHRAE's "System Design Procedures"[1] for more details**.)

The silencer should not be included in the initial calculation. Its required insertion loss is the positive difference between the estimated resultant sound pressure level in the space and the room criterion[2] for the space. If a duct system transmits noise to more than one space, the greatest insertion loss for each octave band is the insertion loss required.

Vibro-Acoustics' V-A Select computer program automates the duct system analysis procedure. **See the V-A Select manual** for more information.

[1]ASHRAE Applications Handbook, 2015, P. 48.18.
[2]ASHRAE Applications Handbook, 2015, P. 48.3

2 Maximum Allowable Pressure Drop

DETERMINE how much silencer pressure drop (including system effects) has been allowed for in the system design. Ordinarily, the silencer pressure drop (including system effects) should not exceed 0.35" (85 Pa).[1]

The user should always consider the added losses due to aerodynamic system effects. That is, if the silencer is located where less than ideal conditions at the inlet and/or at the discharge of the silencer exist, then the silencer's effective pressure drop will be increased. (Total silencer PD = silencer PD per catalog ASTM E-477-13 rating + system effect losses). In some situations the added system effect losses can exceed the pressure drop of the silencer.

Figure: Effect of Silencer Location on Pressure Drop Performance

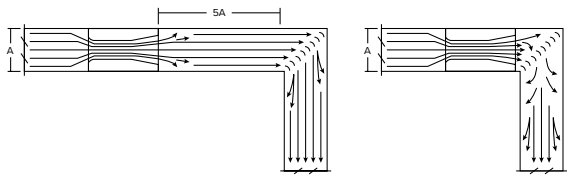

For example, an elbow fitting located immediately following a silencer will prevent regain of static pressure from the silencer's exit velocity pressure. Furthermore, local velocities within the elbow fitting will be greater than the average duct velocity and more turbulent. These factors will produce higher overall static pressure losses.

[1]ASHRAE Applications Handbook, 2015, P. 48.24

SILENCER SYSTEM EFFECTS

VIBRO-ACOUSTICS®
A Swegon Group company

THE FOLLOWING are guidelines to estimate increased pressure losses due to varying silencer inlet and discharge conditions. These should be considered only as very approximate guidelines. Substantial variations can occur depending upon the type of silencer, its internal geometry, size of silencer, size of duct, airflow turbulence, etc.

Note: the factors shown do NOT include pressure drops of the duct element. These must be added separately.

To determine the allowable silencer catalog pressure drop for selection and specification purposes:

Allowable Catalog Silencer PD =

Total Allowable Silencer Pressure Drop including System Effects

(Inlet System Effect Factor x Outlet System Effect Factor)

Vibro-Acoustics' **V-A Select** program allows the user to evaluate system effects when selecting silencers. See the **V-A Select Manual** for more information.

Duct Element	Silencer system effect factor duct element on...	
	Silencer Inlet	**Silencer Discharge**
Transitions	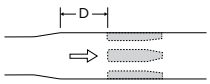	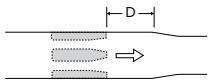
7-1/2 degrees per side Distance of transition from silencer		
D[1] = 1	1.0	1.0
D = 2	1.1	1.1
D = 3	1.2	1.1
25 degrees per side Distance of transition from silencer		
D = 1	1.3	1.1
D = 2	1.6	1.1
D = 3	1.8	1.1
45 degrees per side Distance of transition from silencer		
D = 1	1.7	1.1
D = 2	1.9	1.1
D = 3	2.0	1.1
Elbow – radius type	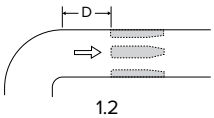	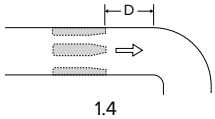
Distance of radius elbow from silencer		
D = 0	1.2	1.4
D = 1	1.1	1.2
Elbow – mitered type with short turning vanes	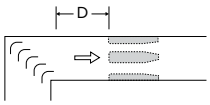	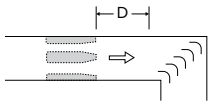
Distance of mitered elbow from silencer		
D = 0	1.2	1.1
D = 1	1.2	1.1
D = 2	1.2	1.2

[1] D is the diameter of round duct or equivalent diameter of rectangular duct.

SILENCER SYSTEM EFFECTS

VIBRO-ACOUSTICS®
A Swegon Group company

Duct Element	Silencer system effect factor duct element on...	
	Silencer Inlet	Silencer Discharge
Elbow – mitered type with no turning vanes Distance of mitered elbow from silencer	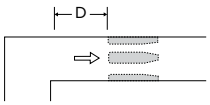	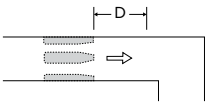
D[1] = 0	1.2	2.9
D = 1	1.0	1.8
D = 2	1.1	1.4
Abrupt entry or exit **Smooth Inlet or Discharge** Distance of entry or exit from silencer	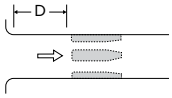	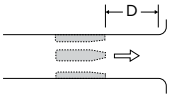
D = 0	1.1	1.8
D = 1	1.0	1.4
D = 2	1.0	1.1
D = 3	1.0	1.0
Abrupt entry or exit **Sharp Inlet or Discharge** Distance of entry or exit from silencer	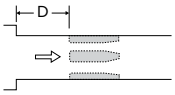	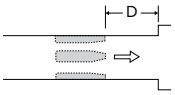
D = 0	1.2	2.0
D = 1	1.1	1.5
D = 2	1.0	1.2
D = 3	1.0	1.0
Centrifugal fan Distance of centrifugal fan from silencer	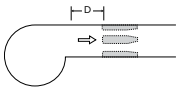	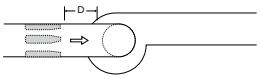
D = 0	1.5	2.0
D = 1	1.2	1.7
D = 2	1.1	1.5
D = 3	1.0	1.2
Axial fan (Also see below – effect of silencer on fan) Distance of axial fan from silencer	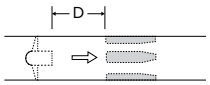	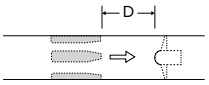
D = 0	1.5	2.0
D = 1	1.2	1.7
D = 2	1.1	1.5
D = 3	1.0	1.2

[1] D is the diameter of round duct or equivalent diameter of rectangular duct.

SILENCER SYSTEM EFFECTS

VIBRO-ACOUSTICS®
A Swegon Group company

Duct Element	Silencer system effect factor duct element on...	
	Silencer Inlet	Silencer Discharge
Coils or filters Distance of coils or filters from silencer	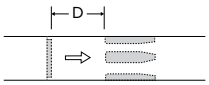	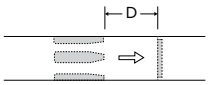
D[1] = 0	1.6	1.6
D = 1	1.0	1.3
D = 2	1.0	1.1

[1] D is the diameter of round duct or equivalent diameter of rectangular duct.

Axial/Fan Silencer System Effects

The effects of various Free Air Silencer Inlets/Discharges upon horsepower consumed by an Axial Fan in a Constant System with Constant Air Flow. Percentages are indicative only, and would differ in different systems.

FREE INLET		H.P. CONSUMED			FREE DISCHARGE
Standard Bellmouth Inlet	Constant System	100%	100%	Constant System	Abrupt fan discharge to room ❹
❶ Inlet cone silencer well matched to fan hub	Constant System	99%	97%	Constant System	Fan manufacturer's evase
Acoustic plenum	Constant System	105%	97%	Constant System	Discharge cone Silencer well matched to fan motor hub ❺
❷ Plenum with aerodynamic low turbulence splitters	Constant System	106%	99%	Constant System	Non-aerodynamic evase (typical) & aerodynamic splitters
❸ Plenum with blunt turbulent splitters	Constant System	110%	104%	Constant System	Non-aerodynamic evase (typical) & blunt non-aerodynamic splitters ❻

SEE DIAGRAM

❶ Inlet Cone Silencer must be aerodynamically matched to fan hub, otherwise H.P. consumed increases considerably to 105% - 110% or more!

❷ Splitters designed so turbulent wake is gone before reaching plane of the fan blades, for lowest fan noise.

❸ Blunt, untapered splitters with either radius or sharp edged tails, create excess turbulence & fan noise from turbulence.

❹ Although unlikely in practice, this was chosen as the reference configuration.

❺ Discharge Cone Silencers must be matched to fan motor hub, or fan H.P. can be well in excess of 100%!

❻ Blunt, untapered splitters do not allow pressure/velocity recovery before dumping air to the room causing excessive, abrupt expansion pressure losses.

General Notes: A. If a fan consumes less horsepower, it generates less noise and therefore needs less silencing.
B. Turbulence allowed to impinge upon the plane of the axial fan blades can create 10-15 dB or more excess fan sound power.

3 Silencer Location

SILENCERS SHOULD generally be located as close to the fan or noise source as possible. This will help contain the noise at the source and limit potential points along the system where the unsilenced noise may break out. However, turbulent airflow usually exists close to noise sources such as fans, valves, dampers, etc. Therefore the user should evaluate aerodynamic system effects (see above).

If silencers are carefully designed they can actually improve flow conditions close to fans. Special fan inlet and discharge silencers, including cone silencers and inlet box silencers, minimize aerodynamic system effects, and contain noise at the source. Their effective added pressure drop could even be slightly negative if the silencer improves the flow into or out of the fan, thus increasing the fan's performance.

Despite the foregoing, the best acoustic location for a duct silencer may be straddling the mechanical room wall to minimize ductborne and breakout/break-in noise (**see figure**). However, fire dampers are often located at this point. As a compromise, many times silencers are located inside the mechanical room close to the mechanical room wall. However, if space does not permit this position, the silencer may need to be located outside the mechanical room. In such cases, high transmission loss (HTL) silencer walls may be required to prevent noise from breaking in or out of the silencer before it is fully attenuated. Connecting duct between the silencer and wall may also have to be HTL wall construction.

Considerations for Silencer Location

BEST SILENCER LOCATION IF NO FIRE DAMPER

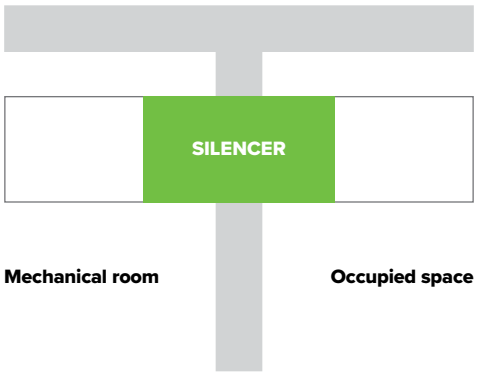

BEST SILENCER LOCATION IF FIRE DAMPER IS REQUIRED

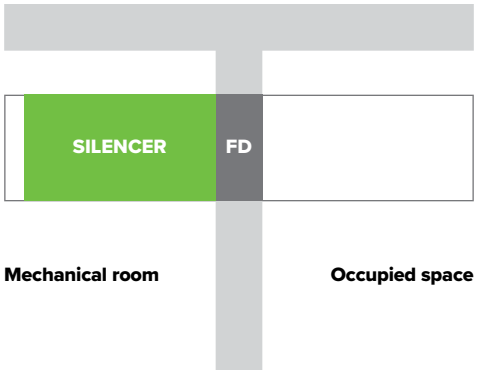

ALTERNATE SILENCER LOCATION

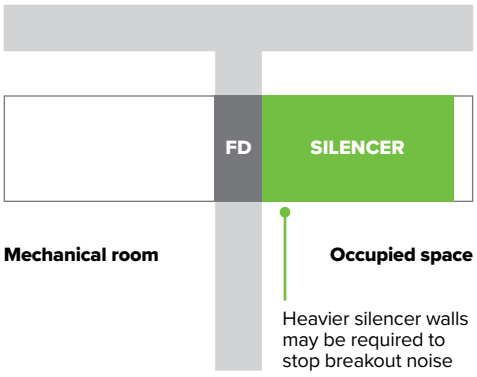

4 Maximum Allowable Airflow Generated Noise

IN THE MAJORITY OF INSTALLATIONS, a concern for silencer airflow generated noise is generally unwarranted because it does not materially contribute to the overall system noise level. This is particularly true if the silencer is properly located close to the source and pressure drops are not excessive.

ASHRAE[1] recommends that in general, airflow generated noise should be evaluated if silencer static pressure drops exceed 0.35" (including system effects), the noise criterion is below RC-35(N), or if the silencer is located very close to or in the occupied space.

To roughly calculate the maximum allowable silencer generated noise when the silencer is located very close to or in the occupied space: Subtract 5dB per octave from the room sound criterion spectrum.

Note: ASHRAE does not recommend selecting silencers with pressure drops in excess of 0.35" pressure drop (including system effect). If the noise criterion is below RC-35(N) consider retaining a qualified Acoustical Consulting Engineer having expertise in HVAC noise control.

5 Select Type of Silencer

ONCE THE ABOVE STEPS HAVE BEEN FOLLOWED, DETERMINE:

> **Silencer shape** (Rectangular or Circular dependent on the connection shape of the ductwork).

> **Silencer type**

> **Dissipative (RD and CD):** Uses acoustic grade glass fiber protected by perforated metal.

> **Film-Faced (RFL and CFL):** Dissipative type with film such as Tedlar or Mylar lining between the perforatedmetal and the acoustical glass fiber. An acoustical spacer is used between the perforated metal and the liner to reduce insertion loss degradations caused by the film liner.

> **No-Media (RNM, CNM and CENM):** Completely void of absorptive media or fill of any kind.

[3]ASHRAE Applications Handbook, 1995 p. 43.17

6 Select Silencer

COMPARE THE ACTUAL INSERTION LOSS required spectrum with the insertion loss spectrum shapes for different silencer sizes and pressure drops available (see Performance Data Section or use the V-A Select or Quick Pick Computer Programs). Select the silencer that best fits the insertion loss required and does not exceed the maximum allowable silencer pressure drop and generated noise.

Ensure that the silencer length selected fits within the allowable space and does not affect the aerodynamic system effects calculated in step 2 above.

As a guideline, Vibro-Acoustics' silencer model numbers include a duct velocity range indicator (i.e., ULV, LV, MV, HV or UHV). This can be used to narrow the multiple silencer options:

Vibro-Acoustics' model numbers also include a frequency indicator (e.g. AC1, AC2, etc.). The lower the "AC" numeric the better the silencer performs in the low frequency range. The higher the number the better it performs at the mid and high frequency ranges.

Normally, the selection of a silencer is limited by the space available and allowable pressure drop. It should be recognized that for a given silencer, the pressure drop will increase as the square of the duct velocity. Thus, at lower system velocities, more insertion loss can be achieved at acceptable pressure drops. In higher velocity systems, longer silencer lengths with larger air passage ways may be required to maintain acceptable pressure drops and achieve the required insertion loss.

Vibro-Acoustics' V-A Select computer program can be used to efficiently select a silencer from the parameters determined in steps 1 through 4 above.

Normal Recommended Duct Velocity Ranges for Vibro-Acoustics' Silencers

	Ultra Low Velocity	Low Velocity	Medium Velocity	High Velocity	Ultra High Velocity
Silencer Type	**ULV**	**LV**	**MV**	**HV**	**UHV**
RD, RFL, RNM	0-500 fpm	500-750 fpm	750-1250 fpm	1250-2000 fpm	see SS8 and SS9
CD, CFL	see LV	0-1500 fpm	1500-3000 fpm	3000-5000 fpm	5000-7000 fpm
CNM	see LV	0-750 fpm	750-1250 fpm	1250-2000 fpm	2000-3500 fpm
CENM	see LV	0-1250 fpm	1250-1750 fpm	1750-2250 fpm	N/A

Note: Silencers can always be used in systems with lower velocities than the recommended operating range. However, more silencer length may be required to achieve the required insertion loss.

7 Standard and Special Construction Options

For standard construction features see the applicable Silencer Sheet.

Vibro-Acoustics offers many special construction options which are needed for certain applications, **see Special Construction Options**.

RECTANGULAR SILENCER CROSS SECTION DIMENSIONS

VIBRO-ACOUSTICS®
A Swegon Group company

Use this chart to determine Rectangular Silencer Models (RD, RFL and RNM) available to match your duct or opening dimensions.

"A" Dimension:

"A" Dimension (inches)	Frequency Indicator Available
6	F9
7-8	F8
9	F7
10	F6, F9
11	F5, F9
12	F4, F9
13	F3, F9
14	F2, F8
15-16	F1, F8
17-18	F7
19	F6
20	F6, F9
21-22	F5, F9
23-24	F4, F9
25-26	F3, F9
27-28	F2, F8
29	F1, F8
30-32	F1, F8, F9
33-37	F7, F9
38-40	F6, F9
41	F6, F8, F9
42-45	F5, F8, F9
46-49	F4, F8, F9
50-53	F3, F7, F9
54-56	F2, F7, F8, F9
57	F2, F6, F8, F9

"A" Dimension (inches)	Frequency Indicator Available
58-62	F1, F6, F8, F9
63-64	F1, F5, F8, F9
65	F5, F8, F9
66-67	F5, F7, F9
68	F5, F7, F8, F9
69-74	F4, F7, F8, F9
75	F3, F7, F8, F9
76-80	F3, F6, F8, F9
81-82	F2, F6, F8, F9
83	F2, F6, F7, F8, F9
84-86	F2, F5, F7, F8, F9
87-91	F1, F5, F7, F8, F9
92-94	F1, F4, F7, F8, F9
95-96	F1, F4, F6, F8, F9
97-98	F4, F6, F8, F9
99	F4, F6, F7, F8, F9
100-104	F3, F6, F7, F8, F9
105-107	F3, F5, F7, F8, F9
108-113	F2, F5, F7, F8, F9
114	F2, F5, F6, F8, F9
115	F2, F4, F6, F8, F9
116-124	F1, F4, F6, F7, F8, F9
125	F1, F3, F6, F7, F8, F9
126-128	F1, F3, F5, F7, F8, F9
129-132	F3, F5, F7, F8, F9
133-134	F3, F5, F6, F7, F8, F9

"A" Dimension (inches)	Frequency Indicator Available
135-137	F2, F5, F6, F7, F8, F9
138-144	F2, F4, F6, F7, F8, F9
145-146	F1, F4, F6, F7, F8, F9
147-149	F1, F4, F5, F7, F8, F9
150-151	F1, F3, F5, F7, F8, F9
152-160	F1, F3, F5, F6, F7, F8, F9
161	F3, F4, F6, F7, F8, F9
162-167	F2, F4, F6, F7, F8, F9
168-170	F2, F4, F5, F7, F8, F9
171-173	F2, F4, F5, F6, F7, F8, F9
174	F1, F4, F5, F6, F7, F8, F9
175-183	F1, F3, F5, F6, F7, F8, F9
184-188	F1, F3, F4, F6, F7, F8, F9
189	F1, F2, F4, F5, F7, F8, F9
190-192	F1, F2, F4, F5, F6, F7, F8, F9
193-199	F2, F4, F5, F6, F7, F8, F9
200-202	F2, F3, F5, F6, F7, F8, F9
203-206	F1, F3, F5, F6, F7, F8, F9
207-209	F1, F3, F4, F6, F7, F8, F9
210-215	F1, F3, F4, F5, F6, F7, F8, F9
216-224	F1, F2, F4, F5, F6, F7, F8, F9
225-229	F2, F3, F5, F6, F7, F8, F9
230	F2, F3, F4, F6, F7, F8, F9
231	F2, F3, F4, F5, F6, F7, F8, F9
232-240	F1, F3, F4, F5, F6, F7, F8, F9

"B" Dimension: Available in Any Size

Note 1: Dimensions are not limited to integer values. Fractional dimensions available within size range noted above.

Note 2: Silencers with "A" or "B" dimension greater than 48" are generally supplied in multiple pieces.

Note 3: "A" dimension can be selected to match either duct width or duct height dimension. It is recommended to match the "A" dimension to the duct width for horizontal duct runs with a duct height greater than 32".

Conversions: Imperial / International System of Units (SI)			
Imperial	**SI**	**SI**	**Imperial**
1 in =	25.4 mm	1 mm =	.03937 in
1 ft =	0.3048 m	1 m =	3.281 ft
1 ft^2 =	0.09290 m^2	1 m^2 =	10.7649 ft^2
1 ft^3 =	0.02832 m^3	1 m^3 =	35.3198 ft^3
1 lb =	0.4536 kg	1 kg =	2.205 lbs
1 fpm =	0.00508 m/s	1 m/s =	196.85 fpm
1 cfm =	0.47195 l/s	1 l/s =	2.119 cfm
1 i.w.g. =	249.1 Pa	1 Pa =	0.00401 i.w.g.

SECTION 233300 - AIR DUCT ACCESSORIES

[INFORMATIONAL NOTE to be removed by user of this specification: since the MasterFormat section 233300 includes numerous sections not applicable to duct silencers, these sections have been left out of this silencer specification. This silencer specification is meant to be incorporated into the applicable portions of the MasterFormat specification. Section 2.2 DUCT SILENCERS may be used in its entirety to replace the DUCT SILENCERS section of the MasterFormat specification.]

PART 1 - GENERAL

1.1 RELATED DOCUMENTS

A. Drawings and general provisions of the Contract, including General and Supplementary Conditions and Division 01 Specification Sections, apply to this Section.

1.2 SUMMARY

A. Section Includes:

1. Duct silencers.

B. Related Sections:

1. Division 23 Section "Vibration and Seismic Controls for HVAC Piping and Equipment".

1.3 SUBMITTALS

A. Performance Data:

1. Silencer manufacturer to provide submittal drawings detailing all duct silencer data specified in the mechanical drawing schedule.

2. Submit laboratory acoustic and aerodynamic performance obtained according to ASTM E477-06a and so certified when submitted for approval. The laboratory must be currently NVLAP accredited for the ASTM E477-06a test standard. A copy of the accreditation certificate must be included with the submittals. Data from non-NVLAP accredited test facilities will not be accepted. Shop drawings submitted without proper certifications will be rejected.
   a. Submitted silencer pressure drops shall not exceed those listed in the silencer schedule. Silencer pressure drop measurements shall be made in accordance with the ASTM E-477-06a test standard. Tests shall be conducted and reported on the identical units for which acoustical data is presented.

b. The manufacturer shall supply certified dynamic insertion loss and self-noise power level data for each scheduled silencer. The data shall match the project's air distribution system requirement for forward or reverse flow, and total system airflow. All ASTM E-477-06a tests to obtain this data shall be conducted in the same facility and shall utilize the same silencer.
c. Silencer dynamic insertion loss shall not be less than that listed in the silencer schedule.
d. Silencer generated noise shall not be greater than that listed in the silencer schedule

3. The silencer manufacturer shall provide, for approval, acoustical system calculations for all duct systems with silencers to demonstrate that the submitted silencers will reduce mechanical fan noise to NC___ in the occupied space. Use sound power levels of actual equipment to be installed on project. Analysis shall include breakout noise calculations. In the absence of specified background sound level criteria, the guidelines as expressed in Table 34 of Chapter 47, "Sound and Vibration Control" of the *2003 ASHRAE Handbook - HVAC Applications*, shall be used.

4. The silencer manufacturer shall test the silencer(s) as indicated in the silencer schedule. The Engineer shall be notified of the test date at least two weeks in advance and the test may be witnessed by the Engineer. Test shall show compliance with the project criteria and is subject to engineer approval. Test facilities and test reports shall be open to inspection upon request from the Engineer.

5. For specific silencers indicated on the silencer schedule, the silencer manufacturer shall provide Computational Fluid Dynamics (CFD) aerodynamic analysis. The analysis shall include the attached ductwork, a minimum of 5 equivalent duct diameters up and downstream of the silencer, as shown on the drawings, to determine silencer pressure drop, including system effects, at design airflow. The manufacturer must report and validate a converged solution domain of the CFD analysis to show the solution is independent of mesh refinement such that two models of different mesh refinement levels produce equivalent results, each with a maximum residual tolerance of 0.001. The minimum cell count shall be 200,000 and the validation model shall have a cell count at least 50% higher. The manufacturer must report the selection of CFD parameters, including mesh type, mesh size, boundary conditions, convergence criteria, and turbulence model. Each CFD analysis shall also include additional post-processed information including number of iterations, convergence status, and resulting y+ values.

E. Source quality-control reports:

1. Silencer manufacturer to provide a copy of their laboratory NVLAP accreditation certificate for the ASTM E-477-06a test standard with the submittals. Data from non-NVLAP accredited test facilities will not be accepted.

[INFORMATIONAL NOTE to be removed by user of this specification: Sections B: LEED Submittal, C: Shop Drawings, D: Coordination Drawings, F: Operation and

Maintenance Data reserved in the MasterFormat specification, no items specific to silencer manufacturer.]

1.4 QUALITY ASSURANCE

A. Comply with NFPA 90A, "Installation of Air Conditioning and Ventilating Systems," and with NFPA 90B, "Installation of Warm Air Heating and Air Conditioning Systems."

B. Silencer performance must have been substantiated by laboratory testing in a duct-to-reverberant room test facility according to ASTM E477-06a.The test facility must provide for airflow in both directions through the test silencer. The test set-up, procedure and facility shall eliminate all effects due to flanking, directivity, end reflection, standing waves and reverberation room absorption. The aero-acoustic laboratory must be currently NVLAP accredited for the ASTM E477-06a test standard.

C. Silencer manufacturer shall provide a written test report by a third party organization showing silencer assemblies have flame-spread index not exceeding 25 and smoke-developed index not exceeding 50 when tested according to ASTM E 84, NFPA 255 or UL 723.

1.5 EXTRA MATERIALS

1. None required for silencers.

PART 2 - PRODUCTS

2.1 MATERIALS

[INFORMATIONAL NOTE to be removed by user of this specification: Sections A, B, C, D, E, F, G reserved in the MasterFormat specification, general to all products. Specific gauges for silencers listed in section 2.2 below.]

2.2 DUCT SILENCERS

A. Basis-of-Design Product: Silencers shall be Vibro-Acoustics.

1. Alternate manufacturers must request and obtain written approval by the Engineer to bid the project at least 10 days prior to the bid due-date. As a condition of pre-approval, alternate manufacturers must submit to the Engineer a minimum of twenty (20) different HVAC silencer test reports. Each report shall be for a silencer tested in full accordance with the ASTM E-477-06a silencer test standard in an aero-acoustic test facility which is NVLAP accredited for the ASTM E-477-06a standard. Each test shall have been conducted within the last 12 month period. A copy of the laboratory's NVLAP accreditation certificate must be included with the submitted reports. Any changes to the specifications must be submitted and approved in writing by the Engineer at least 10 days prior to the bid due-date.

B. General Requirements:

1. Silencers shall be of the size, configuration, capacity and acoustic performance as scheduled on the drawings. All silencers shall be factory fabricated and supplied by the same manufacturer.
2. Silencer inlet and outlet connection dimensions must be equal to the duct sizes shown on the drawings. Duct transitions at silencers are not permitted unless shown on the contract drawings.
3. Silencers shall be constructed in accordance with ASHRAE and SMACNA standards for the pressure and velocity classification specified for the air distribution system in which it is installed. Material gauges noted in other sections are minimums. Material gauges shall be increased as required for the system pressure and velocity classification. The silencers shall not fail structurally when subjected to a differential air pressure of 8 inches water gauge.
4. All casing seams and joints shall be lock-formed and sealed or stitch welded and sealed except as noted in Section G below, to provide leakage-resistant construction. Airtight construction shall be achieved by use of a duct-sealing compound supplied and installed by the contractor at the jobsite.
5. All perforated steel shall be adequately stiffened to insure flatness and form. All spot welds shall be painted.
6. Fire-Performance Characteristics: Silencer assemblies, including acoustic media fill, Vibar™ film liner, sealants, and acoustical spacer, shall have flame-spread index not exceeding 25 and smoke-developed index not exceeding 50 when tested according to ASTM E 84, NFPA 255 or UL 723.
7. Airstream Surfaces: Surfaces in contact with the airstream shall comply with requirements in ASHRAE 62.1-2007.

C. Rectangular Silencers including models **RMB, RD, RFMB, RFL, RNM, EX-RMB, EX-RD, EX-RFMB, EX-RFL, EX-RNM, RLP-MB, RLP-D, RLP-FMB, RLP-FL, RLP-NM, SRMB, SRD, SRFMB, SRFL and SRNM:** Outer casing shall be ASTM A 653/A 653M, G90 galvanized sheet steel, 22 gauge.

D. Rectangular Elbow Silencers including models **REMB, RED, REFMB, REFL, RENM, EX-REMB, EX-RED, EX-REFMB, EX-REFL, EX-RENM:** Outer casing shall be ASTM A 653/A 653M, G90 galvanized sheet steel, 18 gauge. All acoustical splitters shall be internally radiused and aerodynamically designed for efficient turning of the air. Half and full splitters are required as necessary to achieve the scheduled insertion loss. All elbow silencers with a turning cross-section dimension greater than 48” shall have at least two half splitters and one full splitter.

E. Circular Silencers including models **CMB, CD, CFMB, CFL, CLP-MB, CLP-D, CLP-FMB, CLP-FL, CLP-NM, AC-MB, AC-D, AC-FMB, AC-FL , AC-NM, CNM and CENM:** Outer casing shall be ASTM A 653/A 653M, G90 galvanized sheet steel, gauge as listed below.

1. Sheet metal thickness for units up to 18 Inches in Diameter: 22 gauge.
2. Sheet metal thickness for units 18 through 30 Inches in Diameter: 20 gauge.
3. Sheet metal thickness for units 30 through 54 Inches in Diameter: 18 gauge.
4. Sheet metal thickness for units over 54 Inches in Diameter: 16 gauge.

F. Transitional Silencers including models **TMB, TD, TFMB, TFL and TNM:** Outer casing shall be ASTM A 653/A 653M, G90 galvanized sheet steel, 22 gauge. Transitioning shall occur internal to the silencer such that the height of the gap or air passage is uniformly changing with the length of the splitters.

G. Inner perforated metal liner: ASTM A 653/A 653M, G90 galvanized sheet steel.

1. Rectangular Silencers: 26 gauge.
2. Rectangular Elbow Silencers: 22 gauge.
3. Circular Silencers:
   a. Connection diameter up to 18 inches: 26 gauge.
   b. Connection diameter greater than 18 inches: 22 gauge.
4. Transitional Silencers: 22 gauge.

H. Principal Sound-Absorbing Mechanism:

1. No-Media silencers:

   a. Models **RNM, CNM, RENM, CENM, TNM, EX-RNM, EX-RENM, RLP-NM, CLP-NM, AC-NM and SRNM** shall not contain absorptive media of any kind. Attenuation shall be achieved with controlled impedance membranes and broadly tuned resonators.

2. Dissipative and Film Lined silencers:

   a. Models **RD, RFL, CD, CFL, RED, REFL, TD, TFL, EX-RD, EX-RFL, EX-RED, EX-REFL, RLP-D, RLP-FL, CLP-D, CLP-FL, AC-D, AC-FL, SRD and SRFL** type with acoustic media. Media shall be of acoustic quality, shot-free glass fiber insulation with long, resilient fibers bonded with a thermosetting resin. Glass fiber density and compression shall be as required to insure conformance with laboratory test data. Glass fiber shall be packed with a minimum of 15% compression during silencer assembly. Media shall be resilient such that it will not crumble or break, and conform to irregular surfaces. Media shall not cause or accelerate corrosion of aluminum or steel. Mineral wool will not be permitted as a substitute for glass fiber.

   b. Mol**dB**lock Media™ silencers and Film lined Mol**dB**lock Media™ silencers, including models **RMB, RFMB, CMB, CFMB, REMB, REFMB, TMB, TFMB, EX-RMB, EX-RFMB, EX-REMB, EX-REFMB, RLP-MB, RLP-FMB, CLP-MB, CLP-FMB, AC-MB, AC-FMB, SRMB and SRFMB** with acoustic media. Media shall be Mol**dB**lock Media™ insulation containing natural cotton fibers treated with an EPA registered, non-toxic borate solution, “flash dried” to actively inhibit the growth of mold, mildew, bacteria and fungi. Media shall not contain any formaldehydes, phenolic resins or Volatile Organic Compounds (VOC’s) that can off-gas and/or cause health concerns. Media shall be 100% recyclable. Media shall comply with UL181 and NFPA 90A. Mol**dB**lock Media™ insulation shall be packed with a minimum of 15% compression during silencer assembly. Media shall not cause or accelerate corrosion of aluminum or steel. Glass fiber, fiberglass

and mineral wool will not be permitted as a substitute for Mol**dB**lock Media™ insulation.

I. Media Protection:

a. Dissipative silencers, including models **RD, CD, RED, TD, EX-RD, EX-RED, RLP-D, CLP-D and SRD:** Where indicated on the silencer schedule, media shall be encapsulated in glass fiber cloth to help prevent shedding, erosion and impregnation of the glass fiber. All model **AC-D** Axial Cone silencers shall have a glass fiber cloth liner.

b. Film Lined silencers, including models **RFMB, RFL, CFMB, CFL, REFMB, REFL, TFMB, TFL, EX-RFMB, EX-RFL, EX-REFMB, EX-REFL, RLP-FMB, RLP-FL, CLP-FMB, CLP-FL, AC-FMB, AC-FL, SRFMB and SRFL:** The acoustic media shall be completely wrapped with Vibar™ film to help prevent shedding, erosion and impregnation. The wrapped acoustic media shall be separated from the perforated metal by a factory installed ½" thick acoustically transparent spacer. The spacer shall be flame retardant and erosion resistant. A mesh, screen or corrugated perforated liner will not be acceptable as a substitute for the specified spacer. Silencer manufacturer shall provide a written test report by a third party organization showing silencer assemblies have flame-spread index not exceeding 25 and smoke-developed index not exceeding 50 when tested according to ASTM E 84, NFPA 255 or UL 723.

J. HTL Casings: Where indicated on the silencer schedule, silencers shall have high transmission loss (HTL) walls externally applied and completely sealed to the silencer casing by the silencer manufacturer to assure quality controlled transmission loss. The HTL walls shall consist of media, airspace, mass and outer protective metal skin, as required, to obtain the specified room noise criteria. Standard acoustical panels will not be accepted as HTL walls. If requested by the Engineer, breakout noise calculations for each air handling and fan system shall be provided with the silencer submittal to insure compliance with the room noise criteria. Breakout noise calculations shall be based on the sound power levels of the specified equipment.

K. Special Construction:

1. Where noted on the silencer schedule, silencers shall have 16 gauge casing, continuously welded.
2. Where indicated on the silencer schedule, silencers shall have RF filters integral to the silencer. Performance shall be 100 dB at 1 MHz. Pressure drop shall be included in overall silencer pressure drop. RF filter shall be located such that it cannot be bypassed.
3. Where indicated on the silencer schedule, provide a non-conductive section in the silencer casing at the end of the silencer next to the room wall, and provide a minimum of 10" (254mm) x 10" (254mm) inspection port in the silencer casing next to the wall. These features shall not compromise the composite HTL casing of the silencer.
4. Where indicated on the silencer schedule, provide security bars running at 6" (150mm) centers both ways inside the silencer casing to prevent ingress through the silencer.

L. Accessories:

1. Access Doors: Where indicated on the silencer schedule, silencers shall be supplied with an access door(s) to permit fire damper service. Access doors shall be supplied as an integral part of the silencer by the silencer manufacturer. Where HTL walls are also supplied, the access doors shall not reduce the effectiveness of the HTL walls.
2. Shipping Protection: Silencers shall be shipped with factory-installed end caps to prevent contamination during shipping.
3. Airflow Measuring Devices: Where indicated on the silencer schedule, silencers shall have airflow measuring devices factory installed as part of the silencer assembly.

M. Source Quality Control: Test according to ASTM E 477-06a.

1. The manufacturer shall test the silencer(s) as indicated in the silencer schedule. The engineer shall be notified of the test date at least two weeks in advance and the test may be witnessed by the engineer. Test shall show compliance with the project criteria and is subject to engineer approval.
2. Test facilities and test reports shall be open to inspection upon request from the Engineer. Silencer performance must have been substantiated by laboratory testing according to ASTM E-477-06a and so certified when submitted for approval. The aero-acoustic laboratory must be NVLAP accredited for the ASTM E-477-06a test standard. A copy of the accreditation certificate must be included with the submittals. Data from non-NVLAP accredited test facilities will not be accepted.

N. Capacities and Characteristics:

1. See duct silencer performance schedule on mechanical drawings.

PART 3 - EXECUTION

3.1 INSTALLATION

A. Install silencer according to manufacturer’s written installation instructions.

3.2 FIELD QUALITY CONTROL

A. Tests and Inspections:

1. Ensure duct silencers are installed with airflow arrows in direction of airflow.

END OF SECTION 233300

INDUSTRIAL SILENCERS

INDUSTRIAL SILENCERS
AXIAL

SILENCER SHEETS
INDUSTRIAL NOISE CONTROL

VIBRO-ACOUSTICS®
A Swegon Group company

AC

Dissipative
Axial Cone
Silencers

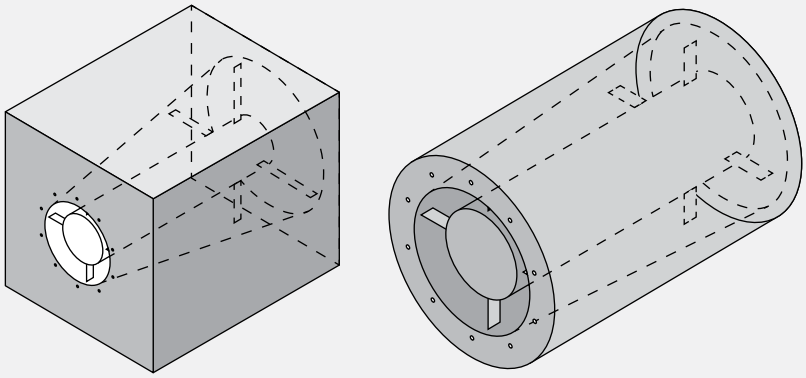

Description

VIBRO-ACOUSTICS' AC SILENCERS are aerodynamically and structurally designed to connect directly to an axial fan. They use acoustic grade glass fiber as the principle sound-absorbing mechanism. Perforated metal and a glass fiber cloth liner protect the acoustical media from erosion by the airflow.

An AC silencer installed on the inlet of an axial fan helps evenly accelerate and direct the air into the tips of the fan blades. A properly sized silencer centerbody helps reduce the pressure losses over the fan hub. A discharge AC silencer effectively decelerates the air to maximize the regain of static pressure. A properly sized centerbody helps reduce the turbulence and energy losses over the fan's motor.

AC silencers are structurally designed to withstand the higher turbulent forces close to an axial fan.

Applications

> To replace axial fan cone connections
> When there is not enough duct length to fit duct silencers
> When the noise needs to be contained at the source
> To help quiet noisy fan rooms
> When minimum energy consumption is required

Features and Benefits

> Available in any connection size to fit the fan
> Gauges compatible with the fan duty
> Internally stiffened
> Centerbody on inlet matched to fan hub to minimize pressure loss
> Centerbody extends to motor on fan discharge to minimize airflow turbulence and maximize static pressure regain
> Can be selected to suit the acoustic, space, or energy-cost requirements
> Construction quality and aerodynamic design optimized to give reliable performance, best acoustics, lowest pressure drop and lowest overall cost

Cautions/When Not to Use AC Silencers

> When standard duct silencers can be effectively utilized
> Silencer must be carefully designed to provide good flow conditions into and out of the fan. If the silencer is mismatched it can provoke the fan to make more noise and lose efficiency

Performance Data/Testing

There is no current adequate rating method for AC silencers. They can be tested in a duct per ASTM E-477 methods. However, performance can vary substantially when directly connected to a fan. Fan performance can also change because of the fan/silencer interaction. Consult VibroAcoustics' application engineers for system specific performance. (1-800-565-8401)

Vibro-Acoustics' 5th generation aero-acoustic laboratory was the first laboratory to be NVLAP accredited (Lab Code 100424-0) for the ASTM E-477 silencer test code. NVLAP is administered by the U.S. Dept. of Commerce.

Silencer Selection and Location

For preliminary performance data see the Performance Data section. To optimize performance Vibro-Acoustics' AC Silencers need to be carefully selected. Call **1-800-565-8401** for custom selections by our application engineers.

Standard Construction Features

> Galvanized, lockformed casings for class I construction
> Galvanized or prime painted mild steel stitchwelded and sealed casings for class II construction
> Prime painted, mild steel continuously welded casings for class III construction
> 2" slip connection at each end
> Centerbody "bullet" centered and supported in airstream by steel struts
> Acoustic grade glass fiber under minimum 15% compression
> Glass fiber cloth liner to protect acoustical media from erosion
> Inlet silencer centerbodies sized to match fan hub or as required by fan geometry
> Discharge silencers sized to match fan motor or as required by fan geometry
> Perforated cone section transitions from fan connection size to duct connection size

Other construction features vary depending on size, type, capacity and pressure of fan. Consult Vibro-Acoustics application engineers for information.

Special Construction Options

> Continuously welded casings
> Special materials (e.g. stainless steel, aluminum)
> Flanges
> Brackets or legs for mounting and isolation
> Vibration control
> Access doors
> Media protection: film liner
> Birdscreen
> Built-in transitions
> Removable splitters
> Flow measuring stations
> For details of above and more special options see Special Construction Options.

SILENCER SHEETS
INDUSTRIAL NOISE CONTROL

VIBRO-ACOUSTICS®
A Swegon Group company

CD-I/ CD-D

Circular Dissipative
Inlet/Discharge
Axial Fan Silencer

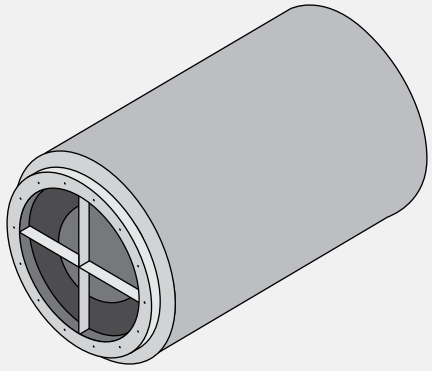

Description

THE VIBRO-ACOUSTICS CD-D silencer is designed to minimize the discharge velocity, and the associated pressure losses (dump loss), while providing optimal attenuation using an aerodynamically designed centerbody. For fan inlet installations, the CD-I centerbody design with a smooth inlet and static regain discharge, will minimize the adverse aero-acoustic system effects associated with fan, silencer, and duct fitting interactions.

Standard Features

> HRS casing with external prime painting and continuously welded seams
> External gauges compatible with fan construction
> Inlet and outlet flanges with customer specified hole pattern
> 16 ga. galvanized perforated internal liner
> Centerbody designed to reduce fan system effects
> Internal stiffeners
> Acoustic grade fibrous media fill under minimum 15%
> Compression with fiberglass cloth protection
> 1 in. x 1 in. x 16 ga. galvanized birdscreen protection

Accessories

> Rain hoods
> Inlet filter housings
> Duct transitions or spool pieces
> Bolt and gasket kits
> Flow measurement probes

Options

> Special painting systems
> Corrosive resistant coatings
> Support legs
> Access panel
> Drainage connection
> Removable birdscreen
> All galvanized or stainless steel construction materials
> Custom designs and configurations for special space and performance requirements

SILENCER SHEETS
INDUSTRIAL NOISE CONTROL

VIBRO-ACOUSTICS®
A Swegon Group company

RD-HB

Rectangular
Dissipative
Horizontal Box
Axial Fan Inlet
Silencer

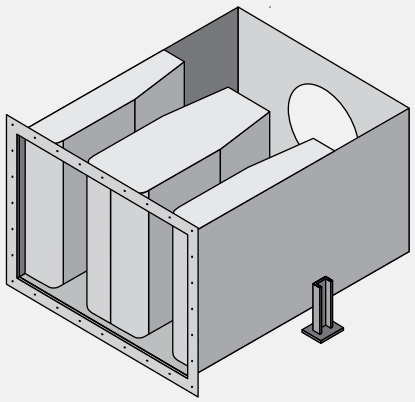

Description

THE VIBRO-ACOUSTICS RD-HB is a 2-stage silencer system that offers significantly higher broad-band attenuation for axial fan inlets, as compared with round casing silencers. The silencer is designed with aerodynamic rectangular baffles, followed by a plenum space which diffuses the airflow immediately upstream from the fan. The continuous inlet flanges ensure low generated noise levels. The RD-HB is typically bolted directly to the fan's flange, which eliminates problematic noise flanking caused by flexible connections.

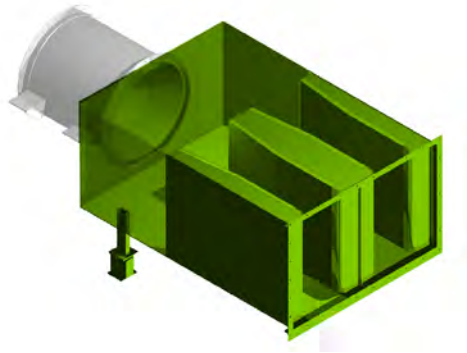

Standard Features

> HRS casing with external prime painting and continuously welded seams
> External gauges compatible with fan construction
> Inlet and outlet flanges with customer specified hole pattern
> 16 ga. galvanized perforated internal liner
> Internal stiffeners
> Acoustic grade fiberglass media fill under minimum 15% compression with fiberglass cloth protection
> 1 in. x 1 in. x 16 ga. galvanized birdscreen inlet protection
> Support legs to suit fan inlet centerline height

Accessories

> Rain hoods
> Inlet filter housings
> Duct transitions or spool pieces
> Bolt and gasket kits
> Flow measurement probes

Options

> Special painting systems
> Corrosive resistant coatings
> Support brackets
> Access panel
> Drainage connections
> Removable birdscreen
> All galvanized or stainless steel construction materials
> Custom designs and configurations for special space and performance requirements
> May be modified for axial fan discharge applications

INDUSTRIAL SILENCERS CENTRIFUGAL

SILENCER SHEETS
INDUSTRIAL NOISE CONTROL

VIBRO-ACOUSTICS®
A Swegon Group company

RD-IB

Rectangular
Dissipative Inlet Box
Centrifugal
Fan Silencer

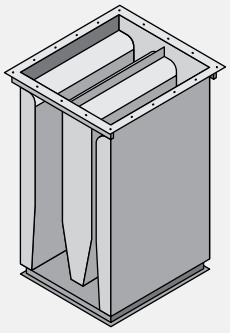

Description

THE VIBRO-ACOUSTICS RD-IB silencer is fitted with continuous inlet flanges and aerodynamically designed baffles, which extend beyond the fan connection dimension. This extended casing design results in very low generated noise levels, minimizes fan system effects, while providing optimal broad-band attenuation.

Standard Features

> HRS casing with external prime painting and continuously welded seams
> External gauges compatible with fan construction
> Inlet and outlet flanges with customer specified hole pattern
> 16 ga. galvanized perforated internal liner
> Internal stiffeners
> Acoustic grade fiberglass media fill under minimum 15% compression with fiberglass cloth protection
> 1 in. x 1 in. x 16 ga. galvanized birdscreen inlet protection

Options

> Special painting systems
> Corrosive resistant coatings
> Support brackets
> Access panel
> Removable birdscreen
> All galvanized or stainless steel construction materials
> Custom designs and configurations for special space and performance requirements

Accessories

> Rain hoods
> Inlet filter housings
> Additional duct transitions or offset pieces
> Bolt and gasket kits
> Flow measurement probes

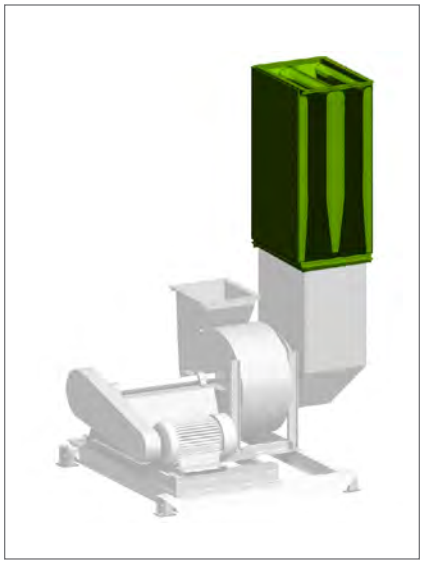

SILENCER SHEETS
INDUSTRIAL NOISE CONTROL

VIBRO-ACOUSTICS®
A Swegon Group company

RED-IB

Rectangular Elbow
Dissipative Inlet Box
Centrifugal
Fan Silencer

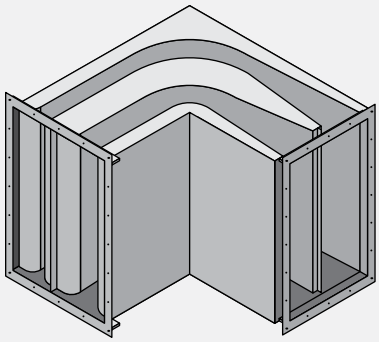

Description

THE VIBRO-ACOUSTICS RED-IB silencer is fitted with continuous inlet flanges and aerodynamically designed baffles. Side baffles are designed to extend beyond the fan connection size, which results in very low generated noise levels at the inlet. This engineered elbow configuration provides optimal attenuation for installations with limited available space.

Standard Features

> HRS casing with external prime painting and continuously welded seams
> External gauges compatible with fan construction
> Inlet and outlet flanges with customer specified hole pattern
> 16 ga. galvanized perforated internal liner
> Internal stiffeners
> Acoustic grade fiberglass media fill under minimum 15% compression with fiberglass cloth protection
> 1 in. x 1 in. x 16 ga. galvanized birdscreen inlet protection

Accessories

> Rain hoods
> Inlet filter housings
> Additional duct transitions or offset pieces
> Bolt and gasket kits
> Flow measurement probes

Options

> Special painting systems
> Corrosive resistant coatings
> Z-Configurations (double elbow)
> Support brackets
> Access panel
> Drainage connection
> Removable birdscreen
> All galvanized or stainless steel construction materials
> Custom designs and configurations for special space and performance requirements

SILENCER SHEETS
INDUSTRIAL NOISE CONTROL

VIBRO-ACOUSTICS®
A Swegon Group company

RD-SB

Rectangular
Dissipative Side Box
Centrifugal Fan
Inlet Silencer

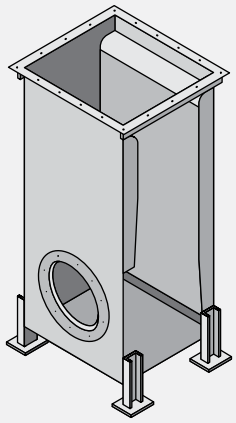

Description

THE VIBRO-ACOUSTICS RD-SB is a 2-stage silencer system using aerodynamically designed rectangular baffles for optimal attenuation, followed by an acoustically lined plenum providing air diffusion immediately upstream from the fan. The RD-SB is typically bolted directly to the fan's flange, which eliminates problematic noise flanking caused by flexible connections. The silencer should be isolated in the same manner as the fan system.

Standard Features

> HRS casing with external prime painting and continuously welded seams
> External gauges compatible with fan construction
> Inlet and outlet flanges with customer specified hole pattern
> 16 ga. galvanized perforated internal liner
> Internal stiffeners
> Acoustic grade fiberglass media fill under minimum 15% compression with fiberglass cloth protection
> 1 in. x 1 in. x 16 ga. galvanized birdscreen inlet protection
> Combined Inlet Silencer and Acoustically Lined Inlet
> Plenum
> Connection to either Round or Rectangular Fan Inlet

Accessories

> Rain hoods
> Inlet filter housings
> Additional duct transitions or offset pieces
> Bolt and gasket kits
> Flow measurement probes

Options

> Special painting systems
> Corrosive resistant coatings
> Support brackets
> Access panel
> Drainage connection
> Removable birdscreen
> All galvanized or stainless steel construction materials
> Custom designs and configurations for special space and performance requirements

SILENCER SHEETS
INDUSTRIAL NOISE CONTROL

VIBRO-ACOUSTICS®
A Swegon Group company

RED-SB

Rectangular
Elbow Dissipative
Side Box Centrifual
Fan Silencer

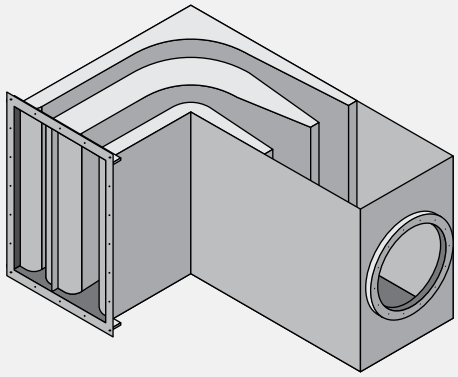

Description

THE VIBRO-ACOUSTICS RED-SB silencer is a 2-stage silencer system using aerodynamically designed rectangular baffles for optimal attenuation, followed by a plenum space providing air diffusion immediately upstream from the fan. The RED-SB is typically bolted directly to the fan's flange, which eliminates problematic noise flanking caused by flexible connections. The silencer should be isolated in the same manner as the fan system.

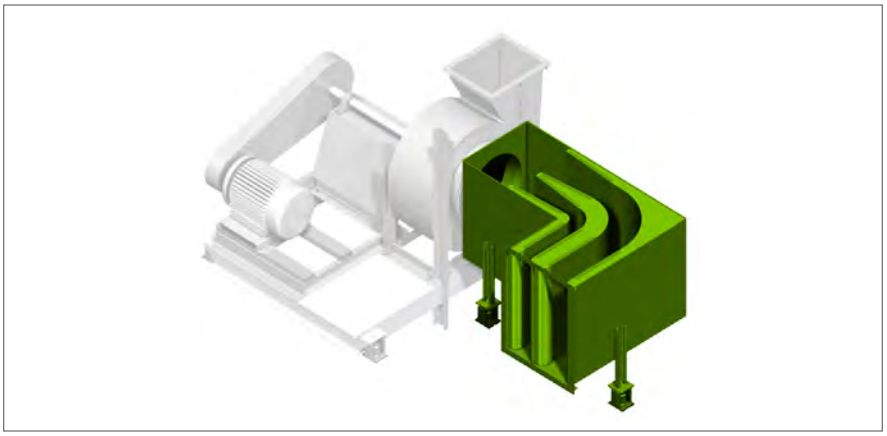

Standard Features

> HRS casing with external prime painting and continuously welded seams
> External gauges compatible with fan construction
> Inlet and outlet flanges with customer specified hole pattern
> Connection to either round or rectangular fan inlet
> 16 ga. galvanized perforated internal liner
> Internal stiffeners
> Acoustic grade fibrous media fill under minimum 15% compression with fiberglass cloth protection
> 1 in. x 1 in. x 16 ga. galvanized birdscreen inlet protection
> Support legs to match fan inlet centerline height

Accessories

> Rain hoods
> Inlet filter housings
> Additional duct transitions or offset pieces
> Bolt and gasket kits
> Flow measurement probes

Options

> Special painting systems
> Corrosive resistant coatings
> Z-Configurations (double elbow)
> Support brackets
> Access panel
> Drainage connection
> Removable birdscreen
> All galvanized or stainless steel construction materials
> Custom designs and configurations for special space and performance requirements

SILENCER SHEETS

VIBRO-ACOUSTICS®
A Swegon Group company

RD-HB

Rectangular
Dissipative
Horizontal Box
Centrifugal Fan Inlet
Silencer

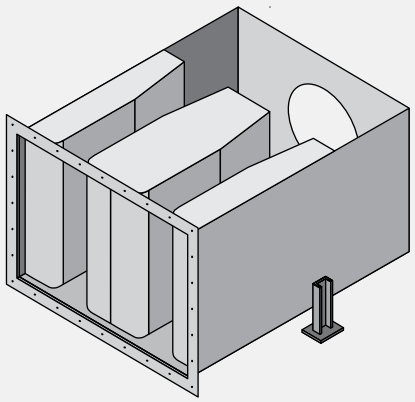

Description

THE VIBRO-ACOUSTICS RD-HB is a 2-stage silencer system using aerodynamically designed rectangular baffles for optimal attenuation, followed by a plenum space for air diffusion upstream from the fan. The continuous inlet flanges ensure low generated noise levels. The RD-HB is typically bolted directly to the fan's flange, which eliminates problematic noise flanking caused by flexible connections. The silencer should therefore be isolated in the same manner as the fan system.

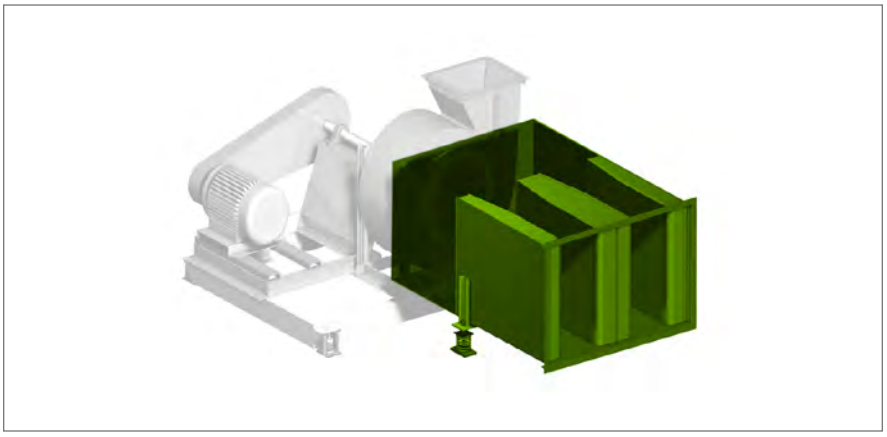

Standard Features

> HRS casing with external prime painting and continuously welded seams
> External gauges compatible with fan construction
> Inlet and outlet flanges with customer specified hole pattern
> Connection to either round or rectangular fan inlet
> Internal stiffeners
> 16 ga. galvanized perforated internal liner
> Acoustic grade fibrous media fill under minimum 15% compression with fiberglass cloth protection
> 1 in. x 1 in. x 16 ga. galvanized birdscreen inlet protection
> Support legs to match fan inlet centerline height

Accessories

> Rain hoods
> Inlet filter housings
> Duct transitions or spool pieces
> Bolt and gasket kits
> Flow measurement probes

Options

> Special painting systems
> Corrosive resistant coatings
> Support brackets
> Access panel
> Drainage connections
> Removable birdscreen
> All galvanized or stainless steel construction materials
> Custom designs and configurations for special space and performance requirements

SILENCER SHEETS
INDUSTRIAL NOISE CONTROL

VIBRO-ACOUSTICS®
A Swegon Group company

CD-D

Circular Dissipative
Centrifugal Fan
Discharge Silencer

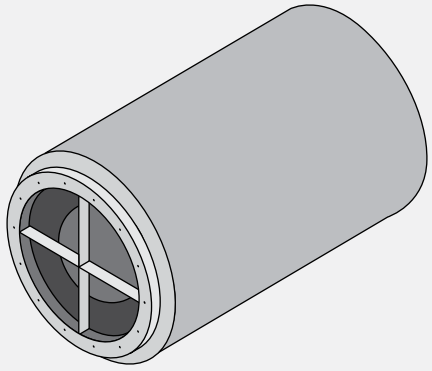

Description

THE VIBRO-ACOUSTICS CD-D silencer is fitted with a continuous flange and an aerodynamic design. This configuration is suitable for the high velocity and pressure associated with high pressure blowers. CD-D silencers are designed to minimize pressure loss and generated noise in these installations.

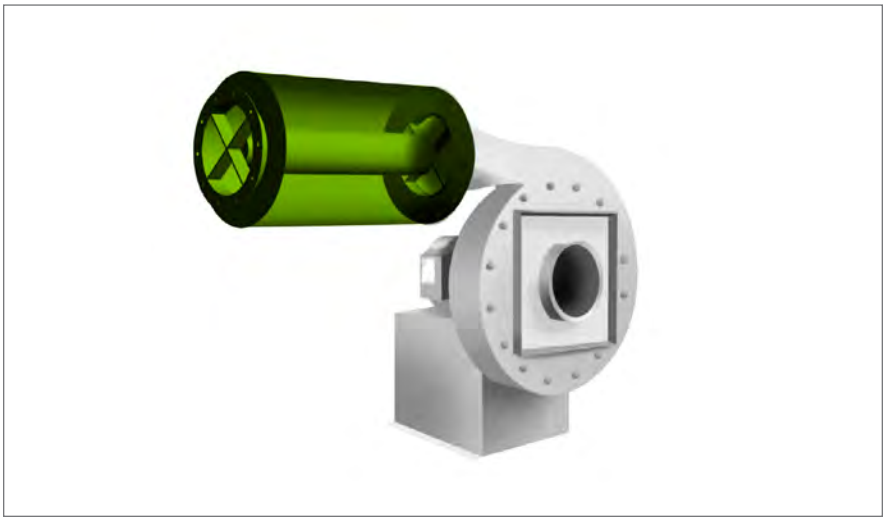

Standard Features

> HRS casing with external prime painting and continuously welded seams
> External gauges compatible with fan construction
> Inlet and outlet flanges with customer specified hole pattern
> 16 ga. galvanized perforated internal liner
> Centerbody designed to reduce fan system effects
> Internal stiffeners
> Acoustic grade fiberglass media fill under minimum 15% compression with fiberglass cloth protection
> 1 in. x 1 in. x 16 ga. galvanized birdscreen protection

Accessories

> Rain hoods
> Inlet filter housings
> Duct transitions or spool pieces
> Bolt and gasket kits
> Flow measurement probes

Options

> Special painting systems
> Corrosive resistant coatings
> Support legs
> Support brackets
> Drainage connection
> Removable birdscreen
> All galvanized or stainless steel construction materials
> Custom designs and configurations for special space and performance requirements

SILENCER SHEETS
INDUSTRIAL NOISE CONTROL

VIBRO-ACOUSTICS®
A Swegon Group company

CD-I

Circular Dissipative
Centrifugal Fan
Inlet Silencer

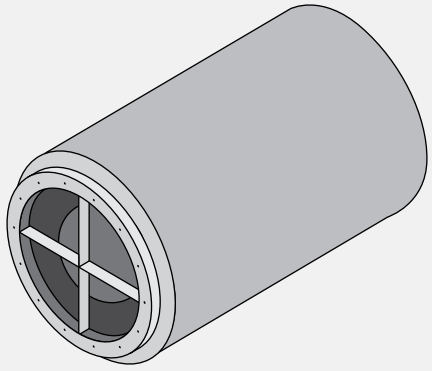

Description

THE VIBRO-ACOUSTICS CD-I silencer is fitted with a continuous flange and an aerodynamically designed centerbody. This results in very low generated noise levels, while providing optimal attenuation. The centerbody's smooth inlet and static regain discharge design will minimize the adverse aero-acoustic system effects associated with fan, silencer, and duct fitting interactions.

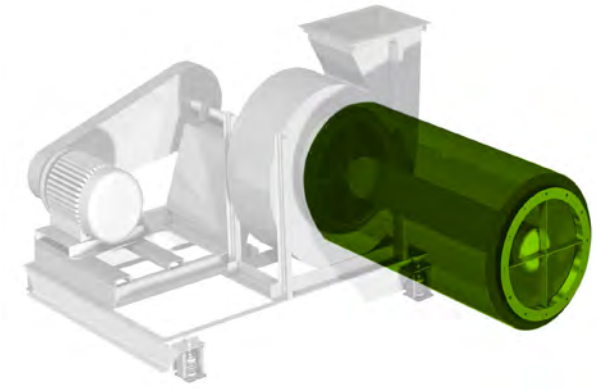

Standard Features

> HRS casing with external prime painting and continuously welded seams
> External gauges compatible with fan construction
> Inlet and outlet flanges with customer specified hole pattern
> 16 ga. galvanized perforated internal liner
> Centerbody designed to reduce fan system effects
> Internal stiffeners
> Acoustic grade fibrous media fill under minimum 15%
> Compression with fiberglass cloth protection
> 1 in. x 1 in. x 16 ga. galvanized birdscreen protection

Accessories

> Rain hoods
> Inlet filter housings
> Duct transitions or spool pieces
> Bolt and gasket kits
> Flow measurement probes

Options

> Special painting systems
> Corrosive resistant coatings
> Support legs
> Access panel
> Drainage connection
> Removable birdscreen
> All galvanized or stainless steel construction materials
> Custom designs and configurations for special space and performance requirements

SILENCER SHEETS
INDUSTRIAL NOISE CONTROL

VIBRO-ACOUSTICS®
A Swegon Group company

RD-D

Rectangular
Dissipative Discharge
Centrifugal
Fan Silencer

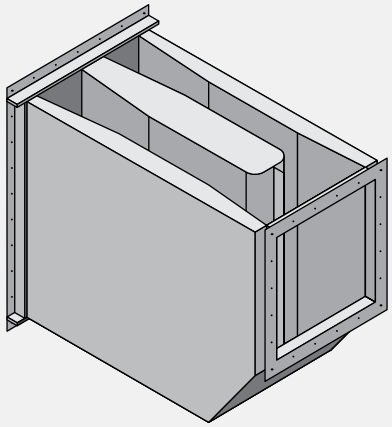

Description

THE VIBRO-ACOUSTICS RD-D IS designed to fit a fan's discharge without the use of a transition duct. The silencer decelerates the air using its own transitional casing design, which is based on the magnitude of the fan discharge velocity. The relatively low air velocity at the RD-D outlet ensures both low generated noise levels and reduced pressure losses due to the sudden dynamic pressure change (dump loss). Internal transition angles are kept to a minimum, while the aerodynamically designed rectangular baffles offer optimal broad-band attenuation.

Standard Features

> HRS casing with external prime painting and continuously welded seams
> Transitional casing
> External gauges compatible with fan construction
> Inlet and outlet flanges with customer specified hole pattern
> 16 ga. galvanized perforated internal liner
> Internal stiffeners
> Acoustic grade fiberglass media fill under minimum 15% compression with fiberglass cloth protection
> 1 in. x 1 in. x 16 ga. galvanized birdscreen protection

Accessories

> Rain hoods
> Duct transitions or spool pieces
> Bolt and gasket kits
> Flow measurement probes

Options

> Special painting systems
> Corrosive resistant coatings
> Support brackets
> Drainage connection
> Access panel
> Removable birdscreen
> All galvanized or stainless steel construction materials
> Custom designs and configurations for special space and performance requirements

SILENCER SHEETS
INDUSTRIAL NOISE CONTROL

VIBRO-ACOUSTICS®
A Swegon Group company

RED-D

Rectangular
Elbow Dissipative
Centrifugal
Fan Silencer

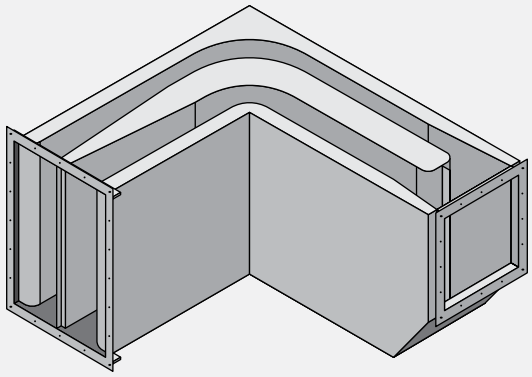

Description

THE VIBRO-ACOUSTICS RED-D is designed to fit a fan's discharge without the use of a transition duct. For installations with limited available space, the elbow silencer is an ideal choice, offering an aerodynamically efficient method to attenuate fan noise. Internal and transitional casing designs are based on the magnitude of the fan discharge velocity. The relatively low air velocity at the RED-D outlet ensures both low generated noise and reduced pressure losses due to the sudden dynamic pressure change (dump-loss).

Standard Features

> HRS casing with external prime painting and continuously welded seams
> Transitional casing
> External gauges compatible with fan construction
> Inlet and outlet flanges with customer specified hole pattern
> 16 ga. galvanized perforated internal liner
> Internal stiffeners
> Acoustic grade fiberglass media fill under minimum 15% compression with fiberglass cloth protection
> 1 in. x 1 in. x 16 ga. galvanized birdscreen protection

Accessories

> Rain hoods
> Additional duct transitions
> Bolt and gasket kits
> Flow measurement probes

Options

> Special painting systems
> Corrosive resistant coatings
> Support brackets
> Drainage connection
> Access panel
> Removable birdscreen
> All galvanized or stainless steel construction materials
> Custom designs and configurations for special space and performance requirements

FAN SILENCER ACCESSORIES
INDUSTRIAL NOISE CONTROL

VIBRO-ACOUSTICS®
A Swegon Group company

INLET FILTER BOX

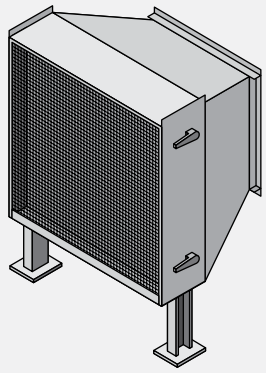

Description

INLET FILTER BOXES are designed to fit any Vibro-Acoustics Inlet Silencer with a flanged connection. Internal filter racks are designed to fit 2 in. to 12 in. deep filters, with the overall casing cross-section sized to ensure an approximate 500fpm face velocity. Configurations include flat and V-bank types.

Standard Construction Features

> HRS casing with external prime painting and continuously welded seams
> External gauges compatible with silencer construction
> Horizontal configuration: 65,000cfm maximum airflow capacity
> Vertical configuration: 32,000cfm maximum airflow capacity
> 1 in. x 1 in. x 16 ga. galvanized birdscreen inlet protection
> Access door with latches
> Support legs (if equipped) to suit fan inlet centerline height

Accessories

> Duct transitions or offset piece
> Bolt and gasket kits
> Flow measurement probes

Special construction options

> Special painting systems
> Corrosive resistant coatings
> Support brackets
> Drainage connection
> Removable birdscreen
> All galvanized or stainless steel construction materials
> Custom designs and configurations for special space and performance requirements

VIBRO-ACOUSTICS®
A Swegon Group company

RAIN HOOD

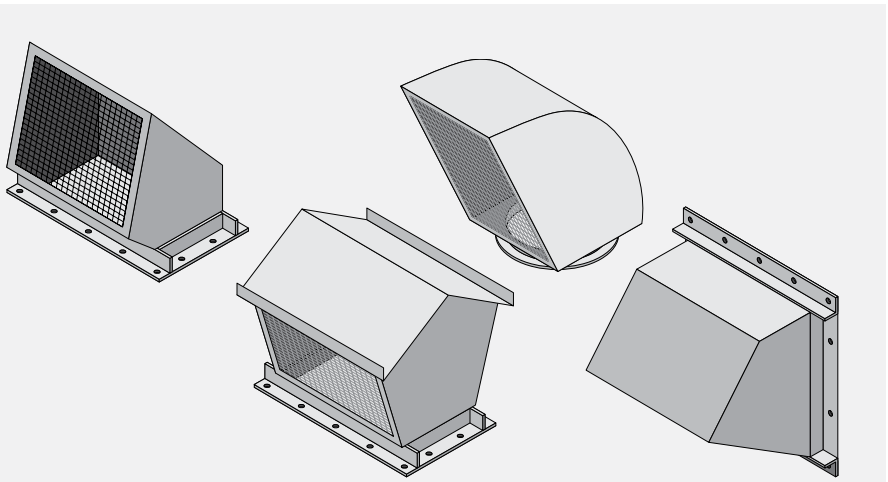

Description

RAIN HOODS are designed to fit any VibroAcoustics Fan Silencer using a bolted flange connection. The streamlined, open area designs result in minimal added pressure drop to the fan system, while protecting against wind driven rain and snow.

Standard Construction Features

> HRS casing with external prime painting and continuously welded seams
> External gauges compatible with silencer construction
> 1 in. x 1 in. x 16 ga. galvanized birdscreen inlet protection

Accessories

> Duct transitions or offset piece
> Bolt and gasket kits
> Flow measurement probes

Special construction options

> Special painting systems
> Corrosive resistant coatings
> Support brackets
> Access panel
> Drainage connection
> Removable birdscreen
> All galvanized or stainless steel construction materials
> Custom designs and configurations for special space and performance requirements

INDUSTRIAL SILENCERS STACK

VIBRO-ACOUSTICS®
A Swegon Group company

STACK

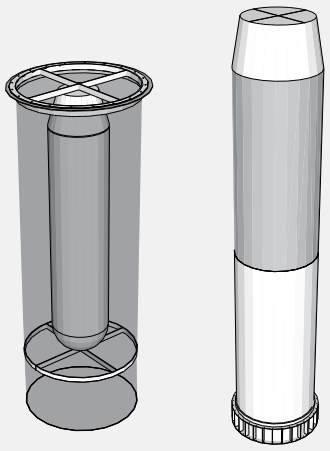

Description

VIBRO-ACOUSTICS STACK SILENCERS offer an optimal aero-acoustic solution for the most challenging industrial stack applications. Through our integrated design and manufacturing techniques, we are also able to manufacture each silencer to meet the unique mechanical demands of a vast array of application issues, such as:

> Gases exiting at high velocity
> Gases at elevated temperatures
> Gases containing particulate matter
> Integrated structural component

Extensive range of Stack Silencer products available, include:

> Dissipative with special media protection
> Tuned, no-media
> Plug resistant
> In-field cleanable

Applications

> Lab Exhaust
> Industrial exhaust
> Dust collectors

Features and Benefits

> HRS Casing with required finishes and Continuously welded seams
> External gauges compatible with stack requirements
> Surface finishes to match architectural requirements
> Structurally designed to withstand wind and seismic loading
> Flanged connections
> Available as dissipative and no-media type
> Stack inserts can also be designed for use with stacks by others

Accessories

> Inducer cap
> Duct spool pieces
> Breeching

Special Options

> Weld passivation for superior surface finish (Stainless only)
> Curb caps for weather protection
> Service ladders and catwalks
> Washdown nozzles
> Inducer caps

VIBRO-ACOUSTICS®
A Swegon Group company

HD Silencer Specification

A. GENERAL

1. Industrial Fan Silencers shall be of the size, configuration, capacity and acoustic performance as scheduled on the drawings. All silencers shall be factory fabricated and supplied by the same manufacturer. Silencers shall be Vibro-Acoustics.

2. Silencer inlet and outlet connection dimensions must be equal to the duct sizes shown on the drawings. Duct transitions at silencers are not permitted.

B. MATERIALS

1. HD Silencers: All Heavy Duty silencers, Models **RD-IB, RED-IB, RD-SB, RED-SB, RD-HB, RD-D, RED-D, CD-I, CD-D, AC-I, AC-D** shall be constructed with a Hot Rolled Steel, Prime Painted casing, minimum gauge equivalent to adjacent ductwork. and 16 gauge galvanized perforated steel. Casing shall be reinforced to withstand __WG pressure on inlet and __WG pressure on outlet. Manufacturer shall submit calculations to substantiate casing and reinforcing will withstand operating pressures.

2. Acoustic Media:

2.1 Dissipative silencers, including models RD-IB, RED-IB, RD-SB, RED-SB, RD-HB, RD-D, RED-D, CD-I, CD-D, AC-I, AC-D:
Media shall be of acoustic quality, shot-free glass fiber insulation with long, resilient fibers bonded with a thermosetting resin. Glass fiber density and compression shall be as required to insure conformance with laboratory test data. Media shall be bacteria and fungus resistant, resilient such that it will not crumble or break, and conforming to irregular surfaces. Media shall not cause or accelerate corrosion of steel. Mineral wool will not be permitted as a substitute for glass fiber.

3. Media Protection:

3.1 Dissipative silencers, including models RD-IB, RED-IB, RD-SB, RED-SB, RD-HB, RD-D, RED-D, CD-I, CD-D, AC-I, AC-D:
Acoustic media shall be encapsulated in #401 glass fiber cloth to help prevent shedding, erosion and impregnation of the glass fiber. Where required for erosion protection when air passage velocity is over 7,500 feet per minute, an 18x18 galvanized mesh screen shall be installed between the perforated metal liner and the fiberglass cloth.

4. **Combustion Ratings:**

4.1 Dissipative silencers, including models RD-IB, RED-IB, RD-SB, RED-SB, RD-HB, RD-D, RED-D, CD-I, CD-D, AC-I, AC-D:
Silencer materials, including glass fiber shall have maximum combustion ratings as noted below when tested in accordance with ASTM E84, NFPA 255 or UL 723.

Flamespread Classification: 15, Smoke Development Rating: 5

C. CONSTRUCTION

1. Silencers shall be constructed in accordance with SMACNA Industrial Duct Construction Standards. Material gauges shall be increased as required for the system pressure and velocity classification.

2. Casings shall be continuosly seal welded. Welders shall be AWS or CWB certified.

3. All perforated steel shall be adequately stiffened to insure flatness and form. All spot welds shall be painted.

D. ACOUSTIC PERFORMANCE

1. Silencer dynamic insertion loss shall not be less than that listed in the silencer schedule.

2. Silencer generated noise shall not be greater than that listed in the silencer schedule.

3. Acoustic performance shall include dynamic insertion loss and generated noise for forward flow (air and noise in same direction) or reverse flow (air and noise in opposite direction) in accordance with the project's air distribution system requirements.

4. All silencer ratings shall be determined in a duct-to-reverberant room test facility which provides for airflow in both directions through the test silencer in accordance with the ASTM E-477-06a test standard. The test set-up, procedure and facility shall eliminate all effects due to flanking, directivity, end reflection, standing waves and reverberation room absorption.

E. AERODYNAMIC PERFORMANCE

1. Silencer pressure drops shall not exceed those listed in the silencer schedule. Silencer pressure drop measurements shall be made in accordance with the ASTM E-477-06a test standard. Tests shall be conducted and reported on the identical units for which acoustical data is presented.

F. SUBMITTALS

1. The manufacturer shall supply certified test data for each scheduled silencer. The data shall include dynamic insertion loss, generated noise and pressure drop for forward or reverse flow, matching the project's air distribution system requirement. All ratings shall be conducted in the same facility and shall utilize the same silencer.

2. The manufacturer shall test the silencers as indicated in the silencer schedule. The engineer shall be notified of the test date at least two weeks in advance and the test may be witnessed by the engineer. Test shall show compliance with the project criteria and is subject to engineer approval.

3. Test facilities and test reports shall be open to inspection upon request from the Engineer. Silencer performance must have been substantiated by laboratory testing according to ASTM E-477-06a and so certified when submitted for approval. The aero-acoustic laboratory must be NVLAP accredited for the ASTM E-477-06a test standard. A copy of the accreditation certificate must be included with the submittals. Data from non-NVLAP accredited test facilities will not be accepted.

CURBS

CURBS
NCC-VCR

tel: 416-291-7371 1-800-565-8401
fax: 416-291-8049 1-888-811-2264
web: www.vibro-acoustics.com
eml: info@vibro-acoustics.com

Vibro-Acoustics Spring Isolated Noise Control Curb Specification

1. General Requirements

1.1. Curb mounted rooftop units shall be isolated on Vibro-Acoustics type NCC-VCR roof top spring isolated noise control curb consisting of galvanized curb sections with integral vertical and laterally restrained isolators formed to fit the contractor supplied rooftop equipment. The spring isolation curb and acoustical treatment package shall provide a space and adjacent space noise criteria of NC XX.

1.2. The silencing elements and the spring isolation elements shall be built complete by the noise control manufacturer as an integral unit roof curb.

1.3. The noise control curb shall bear directly on the roof structure and shall be flashed and waterproofed into the roof's membrane waterproofing system by the installing contractor.

1.4. If products other than those of the basis of design noise control manufacturer are supplied on the project, the purchasing Contractor assumes full performance, project schedule and monetary responsibility for meeting the project noise criteria, including any retrofit work that may be required.

2. Submittals

2.1. The noise control manufacturer shall provide the following acoustical and pressure drop calculations, **stamped by a professional engineer registered in the state of the project**, as part of the submittal package to demonstrate that the resultant noise levels in the indoor occupied spaces served by the rooftop equipment meet the above noise criteria and maximum allowable pressure drop including system effects:

Airborne noise through supply air ducts
Airborne noise through return air ducts
Breakout noise through all ducts
Flanking noise through roof deck
Structure-borne vibration noise
Supply air pressure drop including system effects
Return air pressure drop including system effects

2.2. Submittals shall include PE stamped, IBC or NBC code compliant overturn calculations for site specific wind and seismic conditions.

2.3. Submittals shall include a written test report by a third party organization showing airside silencing elements have flame-spread index not exceeding 25 and smoke-developed index not exceeding 50 when tested according to ASTM E 84, NFPA 255 or UL 723.

2.4. Calculations shall be clearly typed or printed, not handwritten.

3. Performance

3.1. The total noise contribution from other sources other than the AHU's must be at least 5 dB below the specified noise criteria. Sound power levels of actual equipment to be installed on project shall be used for the submitted analysis.

3.2. If the noise level in the occupied spaces exceeds the specified noise criteria level, it will be the financial responsibility of the noise control manufacturer to provide product and labor to achieve the specified criteria. The project schedule is based on the sound power levels of

the “basis of design” air handling units. Additional noise control required as a result of the purchase of noisier air handling units will be the financial responsibility of the purchasing Contractor.

3.3. Site performance verification will be conducted by an acoustical consultant commissioned by the Mechanical Engineer to ensure the specified performances have been attained.

3.3.1. Onsite sound measurements shall be made using a Type 1 integrating sound level meter as defined in the latest versions of ANSI S1.4, ANSI S1.11, and ANSI S1.43. The meter shall utilize parallel octave or 1/3-octave band filters, where all frequency bands are processed simultaneously. Sound measurements shall be un-weighted, time averaged equivalent sound pressure levels (Leq).

3.3.2. The measurements shall be conducted by an independent acoustical consulting firm that is a member of the National Council of Acoustical Consultants. The measurements shall be conducted in accordance with the Engineering Method of the Room Noise Measurement procedure outlined in the 2011 ASHRAE Handbook – HVAC Applications, page 48.32.

4. Noise Control Curb Construction

4.1. Silencing elements shall be constructed of ASTM A 653/A 653M G90 galvanized steel, with fiberglass acoustic media fill protected from erosion by a perforated steel liner. Where indicated on the silencer schedule, media shall be encapsulated in glass fiber cloth or Vibar™ film to help prevent shedding, erosion and impregnation of the glass fiber.

4.2. The curb shall be constructed from a minimum of 16 ga G90 galvanized perimeter steel with a factory attached wood nailer. The perimeter steel seams shall be continuously welded. The galvanized perimeter curb steel shall be attached to a structural steel frame that incorporates a minimum of 4 restrained spring isolators that support the rooftop unit.

4.3. The curb shall have factory installed lifting points

4.4. Curb sides and ends shall be capable of accepting 51 mm (2”) external insulation, factory installed.

4.5. The isolation springs shall be of the vertical and laterally restrained type. The springs shall be designed to be laterally stable and properly selected to provide minimum specified deflection with 50% additional travel to solid. Isolation springs shall be powder coated for corrosion resistance and have a minimum static spring deflection of 25 mm (1”) or 51 mm (2”) or 76 mm (3”) or greater as scheduled.

4.6. Overhung condensing unit sections shall be supported by a structural steel pedestal assembly with isolation springs that are vertically and laterally restrained and shall be installed as the main curb section.

4.7. A galvanized and insulated pan shall be provided under condensing sections that are located within the curb perimeter.

4.8. The curb section shall be complete with factory installed duct supports.

4.9. The curb section shall be complete with factory installed supply air and return air neoprene flex connections.

4.10. Curb access doors or sections shall be installed as required for servicing curb components or accessories.

tel: 416-291-7371 1-800-565-8401
fax: 416-291-8049 1-888-811-2264
web: www.vibro-acoustics.com
eml: info@vibro-acoustics.com

4.11. The curb shall be constructed to match the pitch of the roof.

4.12. The isolation shall allow 6 mm (¼") movement before resisting wind loads in any lateral direction.

4.13. Where required by the project specification the isolation curb shall be designed to meet all seismic loads and wind loading as defined by the building code having jurisdiction.

4.14. The perimeter of the curb shall have a flexible neoprene air and weather seal joining the upper and lower curb sections. There shall also be a continuous closed cell sponge material between the top of the spring isolation curb and underside of the rooftop unit to provide a waterproof seal.

4.15. The spring isolation curb shall be shipped pre-assembled where possible. Where size prohibits one piece shipping, the isolation curb shall be split into a minimum number of sections and all connecting hardware shall be supplied by the manufacture. Additional acoustic accessories shall be shipped loose for field installation.

4.16. The curb shall include a piping enclosure to match the rooftop unit.

4.17. Where required the curb shall be equipped with a 914 mm (36") wide service platform. That includes – handrails, stairs and an open grating walkway.

4.18. All acoustic installation hardware shall be provided by the isolation curb manufacturer.

CURBS ISOLATED (VCR)

VIBRO-ACOUSTICS®
A Swegon Group company

Spring Isolation Curb Specification for Roof Top Units

1.0 General Requirements

1.1 Curb mounted rooftop units shall be isolated on Vibro-Acoustics type VCR roof top spring isolation curb consisting of galvanized curb sections with integral vertical and laterally restrained isolators formed to fit the contractor supplied rooftop equipment. The spring isolation curb and acoustical treatment package if required shall provide a space and adjacent space noise criteria of NC XX.

2.0 Isolation Rail Construction

2.1 The curb shall bear directly on the roof structure and shall be flashed and waterproofed into the roof's membrane waterproofing system by the installing contractor.

2.2 The curb shall be constructed from a minimum of 16 ga G90 galvanized perimeter steel with a factory attached wood nailer. The perimeter steel seams shall be continuously welded. The galvanized perimeter curb steel shall be attached to a structural steel frame that incorporates a minimum of 4 restrained spring isolators that supports the rooftop unit.

2.3 The curb shall have factory installed lifting points

2.4 Curb sides and ends shall be capable of accepting 51 mm (2") external insulation furnished and installed by the roofing contractor or factory installed.

2.5 The isolation springs shall be of the vertical and laterally restrained type. The springs shall be designed to be laterally stable and properly selected to provide minimum specified deflection with 50% additional travel to solid. Isolation springs shall be powder coated for corrosion resistance and have a minimum static spring deflection of 25 mm (1") or 51 mm (2") or 76 mm (3") or greater as scheduled.

2.6 Overhung condensing unit sections shall be supported by a structural steel pedestal assembly with isolation springs that are vertically and laterally restrained and shall be installed as the main curb section.

2.7 A galvanized and insulated pan shall be provided under condensing sections that are located within the curb perimeter.

2.8 The curb section shall be complete with factory installed duct supports.

2.9 The curb section shall be complete with factory installed supply air and return air neoprene flex connections.

2.10 Curb access doors or sections shall be installed as required for servicing curb components or accessories.

2.11 The curb shall be constructed to match the pitch of the roof.

2.12 The isolation shall allow 6 mm (¼") movement before resisting wind loads in any lateral direction.

2.13 Where required by the project specification the isolation curb shall be designed to meet all seismic loads and wind loading as defined by the building code having jurisdiction. Calculations shall be provided and stamped by a Professional Engineer.

2.14 The perimeter of the curb shall have a flexible neoprene air and weather seal joining the upper and lower curb sections. There shall also be a continuous closed cell sponge material above the top of the spring isolation curb to provide a waterproof seal between the rooftop unit.

2.15 The spring isolation curb shall be shipped pre-assembled where possible. Where size prohibits one piece shipping, the isolation curb shall be split into a minimum number of sections and all connecting hardware shall be supplied by the manufacture.

2.16 The acoustical treatment package shall have the following supply air and return air performance:

Octave band (Hz)	63	125	250	500	1000	2000	4000	8000
Supply Air (IL)	xx	xx	xx	xx	xx	xx	xx	xx
Return Air (IL)	xx	xx	xx	xx	xx	xx	xx	xx

2.17 The curb shall be complete with noise transmission break panel assembly with the following performance:

Octave band (Hz)	63	125	250	500	1000	2000	4000	8000
Transmission Loss (TL)	16	21	27	37	48	54	54	54

2.18 The curb shall; when acoustically lined, shall have a sound absorption coefficient performance of:

Octave band (Hz)	125	250	500	1000	2000	4000
Absorption Coef	0.3	0.7	0.9	0.99	0.9	0.8

2.19 The curb shall include a piping enclosure to match the rooftop unit.

2.20 Where required the curb shall be equipped with a 914 mm (36”) wide service platform. That includes – handrails, stairs and an open grating walkway.

2.21 All installation hardware shall be provided by the isolation curb manufacturer.

CURBS STANDARD (RC)

VIBRO-ACOUSTICS®
A Swegon Group company

Guideline Specification for Roof Top Unit Curbs

1.0 General Requirements

1.1 Curb mounted rooftop units shall be supported on a Vibro-Acoustics type RC roof curb consisting of galvanized curb sections with integral vertical and laterally restrained sections formed to fit the contractor supplied rooftop equipment. The curb and acoustical treatment package if required shall provide a space and adjacent space noise criteria of NC XX.

2.0 Construction

2.1 The curb shall bear directly on the roof structure and shall be flashed and waterproofed into the roof's membrane waterproofing system by the installing contractor.

2.2 The curb height shall be a minimum of 381 mm (15") in height to top of the wood nailer as required by local requirements'.

2.3 The curb shall be constructed from a minimum of 18 ga G90 galvanized perimeter steel with a factory attached wood nailer. The perimeter steel seams shall be bolted or welded to provide the required strength and stiffness. The galvanized perimeter curb steel shall be attached to a structural steel frame as required for its seismic rating.

2.4 The curb shall have factory installed lifting points

2.5 Curb sides and ends shall be capable of accepting 51 mm (2") external insulation furnished and installed by the roofing contractor or factory installed.

2.6 A galvanized and insulated waterproof pan shall be provided under condensing or open sections that are located within the curb perimeter.

2.7 The curb section shall be complete with factory installed duct supports.

2.8 Curb access doors or sections shall be installed as required for servicing curb components or accessories.

2.9 The curb shall be constructed to match the pitch of the roof.

2.10 Where required by the project specification the curb shall be designed to meet all seismic loads and wind loading as defined by the building code having jurisdiction. Calculations and 3D FEA (Finite Element Analysis) shall be provided and stamped by a Professional Engineer.

2.11 There shall be a continuous closed cell sponge material on top of the curb to provide a waterproof seal between the rooftop unit. This material shall be supplied by the manufacture and shipped loose for field installation by the installing contractor.

2.12 The curb shall be shipped pre-assembled where possible. Where size prohibits one piece shipping, the isolation curb shall be split into a minimum number of sections and all connecting hardware shall be supplied by the manufacture.

2.13 The acoustical treatment package shall have the following supply air and return air performance:

Octave band (Hz)	63	125	250	500	1000	2000	4000	8000
Supply Air (IL)	6	11	16	25	28	24	23	19
Return Air (IL)	5	9	12	21	25	22	19	17

2.14 The curb shall be complete with noise transmission break panel assembly with the following performance:

Octave band (Hz)	63	125	250	500	1000	2000	4000	8000
Transmission Loss (TL)	16	21	27	37	48	54	54	54

2.15 The curb shall; when acoustically lined, shall have a sound absorption coefficient performance of:

Octave band (Hz)	125	250	500	1000	2000	4000
Absorption Coef	0.3	0.7	0.9	0.99	0.9	0.8

2.16 The curb shall include a piping enclosure to match the rooftop unit.

2.17 Where required the curb shall be equipped with a 914 mm (36”) wide service platform. That includes – handrails, stairs and an open grating walkway.

2.18 All installation hardware shall be provided by the isolation curb manufacturer.

PLENUMS, ENCLOSURES & BARRIERS

PLENUMS

VIBRO-ACOUSTICS®
A Swegon Group company

AP

Acoustical Plenum Silencers

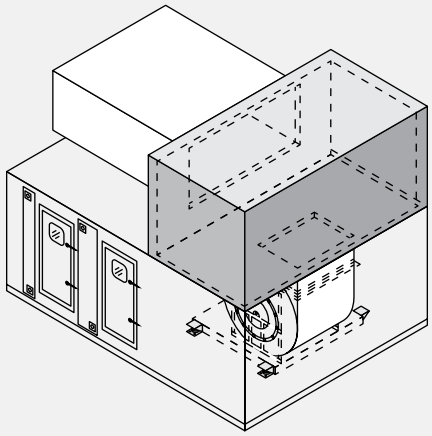

Description

VIBRO-ACOUSTICS' AP SILENCERS are expansion chambers with thick acoustical lining. The most common lining thickness specified is 4" for fan noise control. Thicker treatment of 6" or even 8" is more effective in the low frequency range.

Plenum wall lining of acoustic grade glass fiber is held in place and protected by perforated metal. Glass fiber cloth or a film liner such as Tedlar, between the perforated metal and the glass fiber, may be used to minimize glass fiber erosion. For certain applications, the perforated liner may be replaced by solid sheet to eliminate air coming in contact with the fiberglass media. For applications where no media can be allowed within the plenum whatsoever, specially tuned chambers are used within the perforated liner for sound attenuation.

Intake AP silencers may enclose a fan and include multiple inlet or discharge openings. Fan, coil or filter access via removable panels, panel sections or doors may be provided. Fan discharge AP silencers may provide multiple discharge take-offs in varying directions.

Applications

> For low frequency attenuation
> Integral to or in conjunction with air handling units
> When the noise needs to be contained at the source
> To help quiet noisy fan rooms

Features and Benefits

> Available in factory assembled or “knock-down” construction

> Panel connections may be “tongue and groove” (for strength), “H-section” or “internal flange butt” type (for ease of panel removal)

> Various panel sizes and thicknesses

> Good quality seals to resist moisture, air and noise leakage

> Made in sections to fit ceiling space and can incorporate notch-outs to facilitate cross-over beams, pipes, ducts, etc.

> Factory designed and manufactured removable panels, access sections, windows and doors

> Thick panel construction (4” or greater) available for extra low frequency attenuation

> Heavier gauge or composite construction available to minimize breakout noise

> Can be selected to suit the acoustic, space, or energy-cost requirements

> Construction quality and aerodynamic design optimized to give reliable performance, best acoustics, lowest pressure drop and lowest overall cost

> Available in Dissipative, Film Lined and No-Media options

> When break-out noise is of prime concern AP silencers may be appropriate selections. They may require mass/stiffness added to their outer casing

Cautions/When Not to Use AP Silencers

> When there is an insufficient volume of space available consider Fan Silencers or RLP/CLP silencers

Performance Data/Testing

Vibro-Acoustics’ 5th generation aero-acoustic laboratory was the first laboratory to be NVLAP accredited (Lab Code 100424-0) for the ASTM E-477 silencer test code. NVLAP is administered by the U.S. Dept. of Commerce.

Silencer Selection and Location

Vibro-Acoustics offers multiple selection methods, from our complete analysis service to Do-It-Yourself quick selections. Refer to Silencer Selection Instructions for details.

Standard Construction Features

> Solid galvanized skin

> Perforated galvanized liner

> Acoustic grade glass fiber under minimum 15% compression with thickness usually ranging from 2- 8” depending on Acoustic performance required and space available

> Panel connection type available as “tongue and groove”, “H-section” or “internal flange butt”

> Internal stiffening to add strength to panels

Special Construction Options

> Heavier gauge skins and perforated metal

> Special materials (e.g. stainless steel, aluminum)

> Access doors, openings

> Removable panels or panel sections

> Windows

> Media protection: glass fiber cloth, tedlar or solid metal skins

> High transmission loss (HTL) construction to prevent breakout/break-in noise

> Special finishes

> Floor gratings drain pans

> Structural support systems (hanging or floor mounted)

> Integration of components (e.g. Filter racks, coil racks)

> For details of above and more special options see Special Construction Options.

ENCLOSURES

PANEL SHEETS

VIBRO-ACOUSTICS®
A Swegon Group company

PS1A

Acoustic Panels
2” Tongue & Groove

Performance
> Performance based on a 2” thick panel with 18GA outer sheet and 22GA inner liner filled with Acoustic grade media

Advantages
> Self aligning and interlocking
> Easy to assemble at job site
> Pressure rating up to 10” W.G.
> Well suited for large plenums walls due to inherent strength

Applications
> Enclosures for noisy equipment
> Acoustically sensitive rooms and booths
> Air handling unit casings and plenums
> Sound testing facilities
> Acoustic Barriers for noise by law compliance

Construction
> Roll formed inner and outer skin
> Maximum 16 ga galvanized or stainless steel
> Thermal/Acoustical media sandwiched between skins
> Stiffeners installed internally to provide strength
> Strong panel joints

Options
> Panels can be built to required sizes
> Panel can be built with required materials like Galvanized, stainless, Galvanneal, pre-painted or Aluminum
> Doors, windows, access panels and openings can be provided as required
> Thermal break
> Lining for acoustic media (Tedlar, Mylar and Fiberglass cloth)

Octave Band	125	250	500	1000	2000	4000
Transmission Loss	20	25	39	52	53	56
Absorption	0.3	0.7	0.9	0.99	0.9	0.8

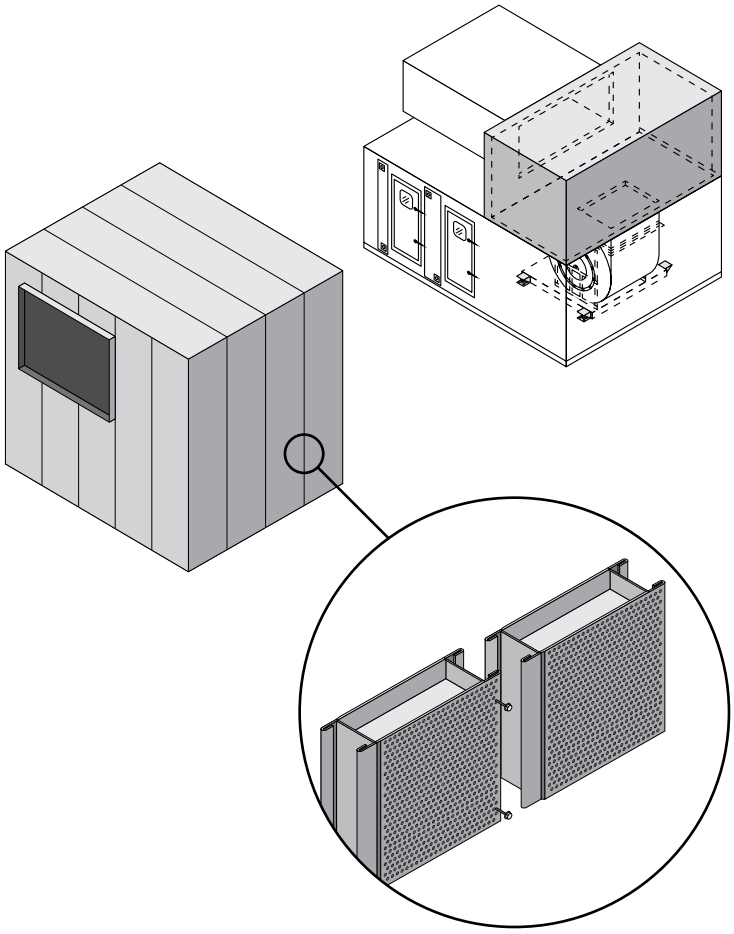

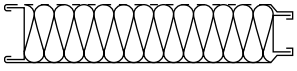

Solid / Perforated

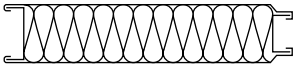

Solid / Solid

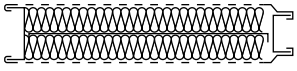

Septum

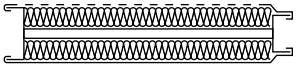

Added Mass Core

PANEL SHEETS

VIBRO-ACOUSTICS®
A Swegon Group company

PS1B

Acoustic Panels
4" Tongue & Groove

Performance
> Performance based on a 4" thick panel with 18GA outer sheet and 22GA inner liner filled with Acoustic grade media

Advantages
> Self aligning and interlocking
> Easy to assemble at job site
> Pressure rating up to 10" W.G.
> Well suited for large plenums walls due to inherent strength

Applications
> Enclosures for noisy equipment
> Acoustically sensitive rooms and booths
> Air handling unit casings and plenums
> Sound testing facilities
> Acoustic Barriers for noise by law compliance

Construction
> Roll formed inner and outer skin
> Maximum 16 ga galvanized or stainless steel
> Thermal/Acoustical media sandwiched between skins
> Stiffeners installed internally to provide strength
> Strong panel joints

Options
> Panels can be built to required sizes
> Panel can be built with required materials like Galvanized, stainless, Galvanneal, pre-painted or Aluminum
> Doors, windows, access panels and openings can be provided as required
> Thermal break
> Lining for acoustic media (Tedlar, Mylar and Fiberglass cloth)

Octave Band	125	250	500	1000	2000	4000
Transmission Loss	21	27	37	48	54	54
Absorption	0.7	0.9	0.99	0.99	0.9	0.8

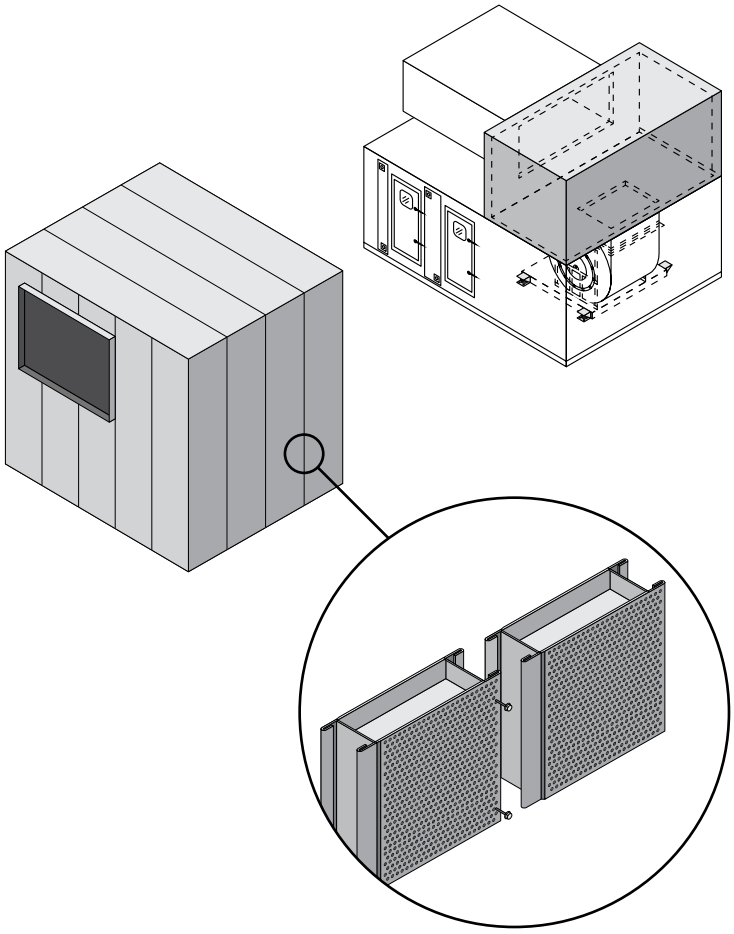

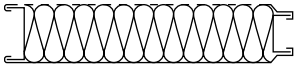

Solid / Perforated

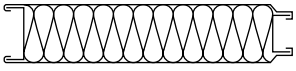

Solid / Solid

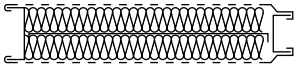

Septum

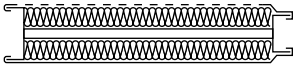

Added Mass Core

VIBRO-ACOUSTICS®
A Swegon Group company

PS4

Access Doors

SPECIFICATION

> 24” x 60” Door size (20” x 56” clear opening)
> 12” x 12” double pane Plexiglas window
> Quantity of 2 Ventlok 310 handles and 2 plated butt hinges
> Neoprene bulb gasket door seal
> 16 ga solid galvanized outside sheet; 22 ga solid galvanized steel inside sheet; 12 ga galvanzed steel frame

ADVANTAGES

> Doors are pre-hung in frame with attached closure hardware
> Easily installed in minimum of time
> Quality seals – resists moisture, air and noise leakage
> Excellent installed appearance
> Superior strength

APPLICATIONS

> Access for rooms and booths
> Access for Air handling units and plenums

CONSTRUCTION

> Minimum 12 ga galvanized steel formed frame
> Maximum 10 ga galvanized or stainless steel face sheet
> Maximum 10 ga galvanized or stainless steel solid inside sheet
> Thermal/Acoustical material sandwiched between skins
> Internal stiffening of door
> Plated 4” x 4.5” in ball bearing butt hinges
> Two Ventlok 310 handles
> Floating hinge mounts, for field adjustment
> Bulb gasket for perimeter seal
> Inside pull

OPTIONS

> Door sizes and thicknesses to suit requirements
> Double door arrangements
> Alternate materials
> Doubled paned windows
> Windows with wired or tempered glass, Lexan or acrylic panes
> Thermal breaks on through metal
> Piano hinges – plated or stainless steel
> Automotive style hinges and latches
> Heavy duty / industrial latches
> Neoprene or FDA white perimeter seal gasket

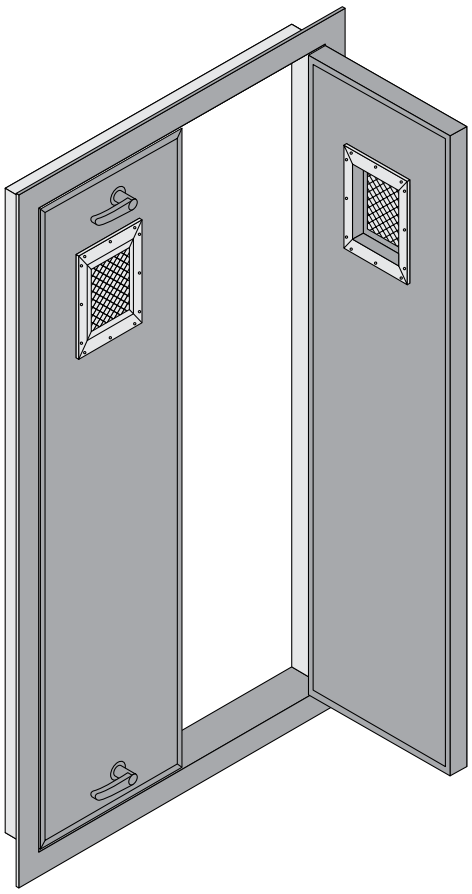

tel: 416-291-7371 1-800-565-8401
fax: 416-291-8049 1-888-811-2264
web: www.vibro-acoustics.com
eml: info@vibro-acoustics.com

Section 15xxx – Vibro-Acoustics Enclosures and Plenums

Part 1 – General

1.1 Related Documents

A. **General:** Comply with the general Conditions and all applicable Contract Documents.

1.2 Work Included: Each Enclosure and Plenum shall be a complete assembly with support steel, sealant, assembly hardware (bolts, screws etc.), access doors

1.3 Submittals

A. **Product Data:** Submit manufacturer's technical product data for enclosure or plenum showing dimensional, weights, capacities, ratings, finishes of materials, and installation instructions.

B. **Shop Drawings**: Submit shop drawings showing unit dimensions, weight loading, Required clearances, field connection details and methods of support. Draw to a scale of 3/8" to one foot, using same sheet size as Contract Drawings. Including dampers and duct connections

2.2 Quality Assurance

A. **Manufacturer's Responsibility:** Enclosure or plenum manufacturer shall have sole source responsibility for the design, factory fabrication and supply of all components and equipment as noted below. Provide enclosure/plenums that are a product of an equipment manufacturer regularly engaged in the production of such product. Unit components and equipment fabricated and supplied by the contractor will not be permitted.

B. **Contractor's Responsibility:** The Contractor shall be responsible for the field assembly of the enclosure/plenum per the instructions and submittal documents supplied by the manufacturer. The Contractor shall be responsible for providing and installing equipment safing. The Contractor shall provide the manufacturer with all field dimensions, mounting locations and duct openings as required to coordinate the design and fabrication of the enclosure or plenum.

C. **Codes and Standards:** Provide enclosures and plenums conforming to the following:

1. National Fire Protection Association (NFPA): Provide enclosure/plenum internal insulation complying with NFPA 90A, "Standard for the Installation of Air Condition and Ventilating Systems".

2. Sheet Metal and Air Conditioning Contractors' National Association, Inc. (SMACNA): Comply with applicable SMACNA standards including "HVAC Duct Construction Standards - Metal and Flexible".

2.2 Delivery, Storage and Handling

A. **Delivery:** Deliver components on factory shipping skids Pack small components in factory-fabricated protective containers.
B. **Handling:** Handle components carefully to avoid damage to components, enclosures, and finishes. Do not install damaged components; replace and return damaged components to product manufacturer.
C. **Storage:** Store components in a clean dry place and protect from weather and construction traffic.
D. **Unloading:** Comply with manufacturer's rigging and installation instructions for unloading and moving them to final location

Part 2-Product:

2.1 Manufacturers

A. Acceptable manufacturers: Vibro-Acoustics

2.2 Enclosures or Plenums

A. Physical dimensions must be maintained as shown on the contract drawings. If dimensions are different from that shown, the owner and engineer must be advised at the time of bid review.

B. Design enclosure/plenum to be suitable for the maximum, total static pressure under design conditions.

2.3 Construction

A. **Wall and Roof Panels:** Panels shall be 4" tongue and groove type. The exterior sheet shall be a minimum of 18 ga. G90 galvanized steel. The interior sheet shall be a minimum of 22 ga. G90 galvanized steel. The interior sheet shall be perforated with 3/32" diameter holes on 3/16" centers in all areas, except downstream of cooling coils and humidifiers. In these areas the interior sheet shall be 22 ga. G90 galvanized steel for a distance of 42". Panels shall be insulated with 4" 3 lb./ft^3 fiberglass. In all exhaust air areas the interior sheet shall be 16 ga 304 solid stainless steel

B. **Removable Panels:** Bolted panels of the Internal Flange Butt Connection type shall be provided for equipment removal. Panels shall be 4" with construction as noted above.

tel: 416-291-7371 1-800-565-8401
fax: 416-291-8049 1-888-811-2264
web: www.vibro-acoustics.com
eml: info@vibro-acoustics.com

C. **Safing And Single Wall Panels:** All safing and single wall panels shall be 16 ga. galvanized steel, except for areas with moisture, these items shall be 16 ga. 304 stainless steel. Safing and single wall panels shall be field measured and supplied by the contractor.

D. **Structural Support Steel:** Structural steel shall be provided by the enclosure or plenum manufacturer so the maximum deflection of the assembled panels is L/180. Structural to structural steel connections shall be fully welded.

E. **Media:** Media shall be incombustible, acoustical quality, shot-free fiberglass insulation with long, resilient fibers bonded with a thermosetting resin. Fiberglass shall be packed with 15% compression during panel assembly. Media shall be bacteria and fungus resistant and conform to irregular surfaces. Media shall not cause or accelerate corrosion of aluminum or steel. Mineral wool will not be permitted as a substitute for fiberglass.

F. **Access Doors:** Doors shall be provided for each component section. Doors shall be 4" x 24" wide x 72" high with the same construction as the acoustic panels, except that the interior sheet shall be solid. Doors shall be mounted in a 10 ga. galvanized steel angle frame with a single "P" gasket. Hardware shall include 2 cam-type Ventlok 310 latches and 2 butt hinges. Doors shall be supplied with 12" x 12" inspection windows, double-glazed with wire reinforced glass mounted in a neoprene U-gasket.

G. **Leakage:** The assembled enclosure or plenum shall have a leakage rate as specified by SMACNA and ASHRAE based on a specified leakage classification of CL6

H. **Performance:** The acoustical performance of the panels shall be equal to or greater than the following:

Octave Band Hz	63	125	250	500	1K	2K	4K	8K
Transmission Loss	18	21	27	37	48	55	55	54
Absorption Coefficients	-	0.74	0.9	0.99	0.99	0.9	0.9	-

The thermal conductance of the insulation shall be less than 0.06BTU/hr/sq.ft./F at 50 degrees F mean temperature. The overall thermal conductance of the assembled structure shall not exceed 0.15 BTU/hr/sq. ft./F at 50 degrees F mean temperature. The panel design shall have maximum combustion ratings as noted below when tested in accordance with ASTM E84, NFPA 255 or UL 723.

Panel materials including glass fiber:
Flamespread Classification: 15
Smoke Development Rating: 5

Panel materials including glass fiber, film liner and acoustical spacer:

VIBRO-ACOUSTICS®
Noise Control | Vibration Isolation | Restraint Systems
Member VISCMA
tel: 416-291-7371 1-800-565-8401
fax: 416-291-8049 1-888-811-2264
web: www.vibro-acoustics.com
eml: info@vibro-acoustics.com

Flamespread Classification:	20
Smoke Development:	45

DETAIL 1

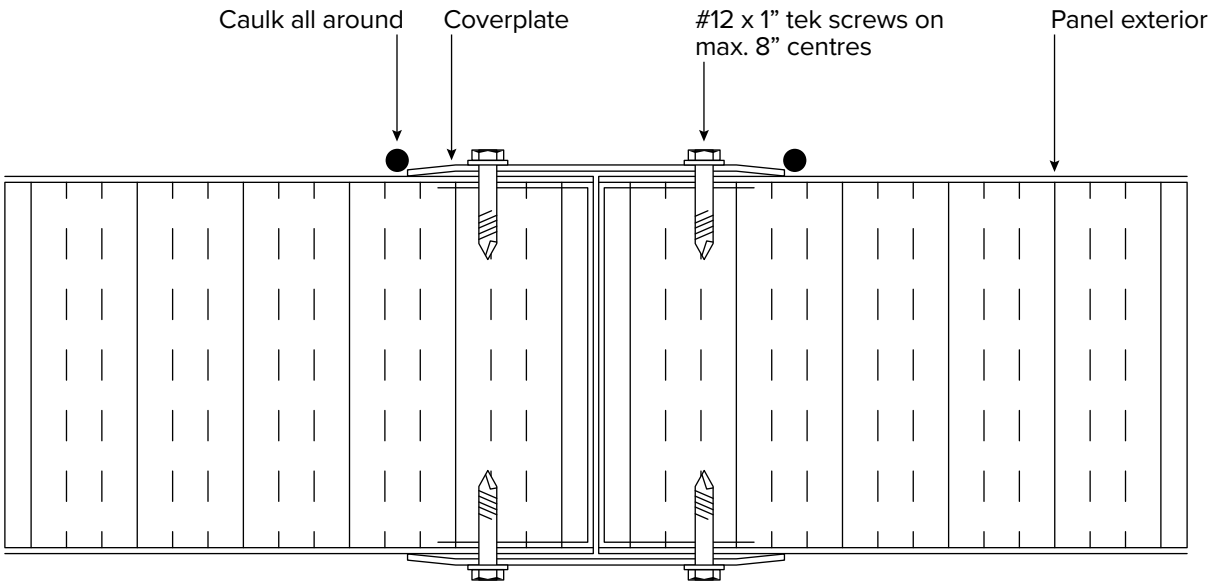

WALL AND ROOF PANEL SEAM

DETAIL 2

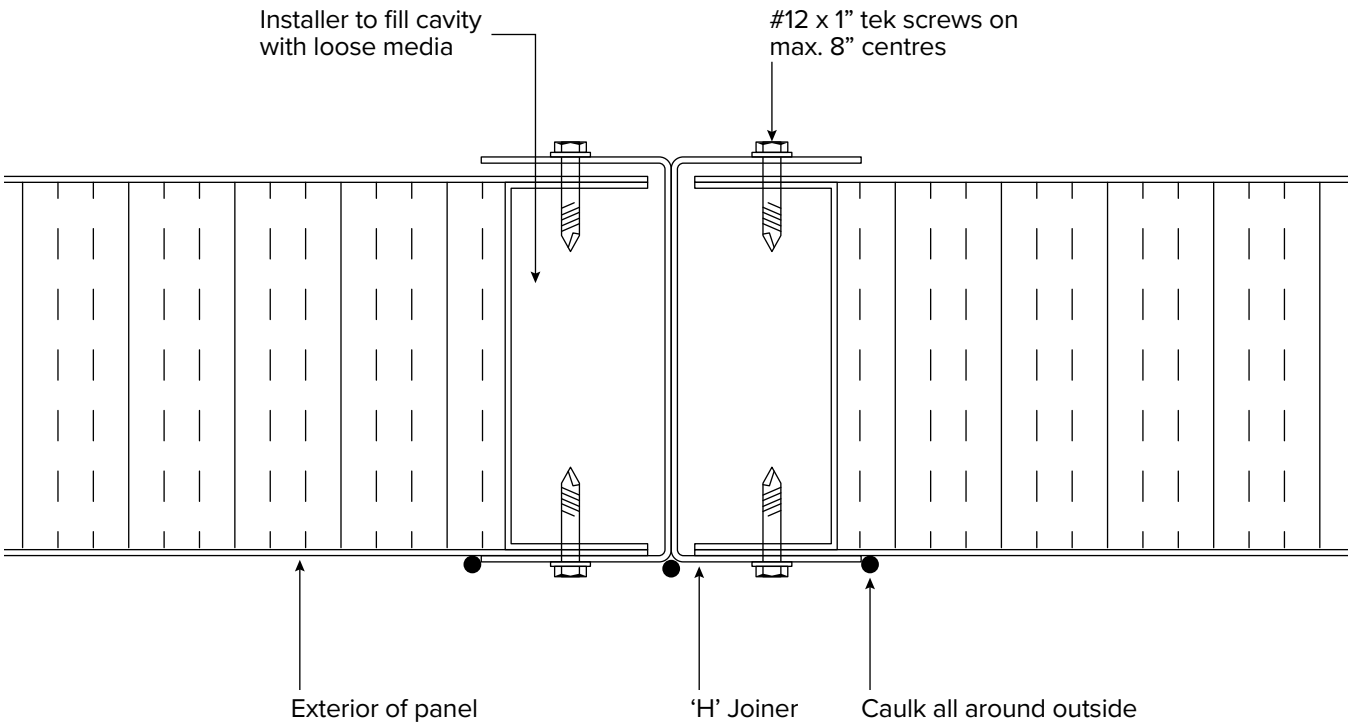

‘’H’ JOINER CONNECTION

DETAIL 3

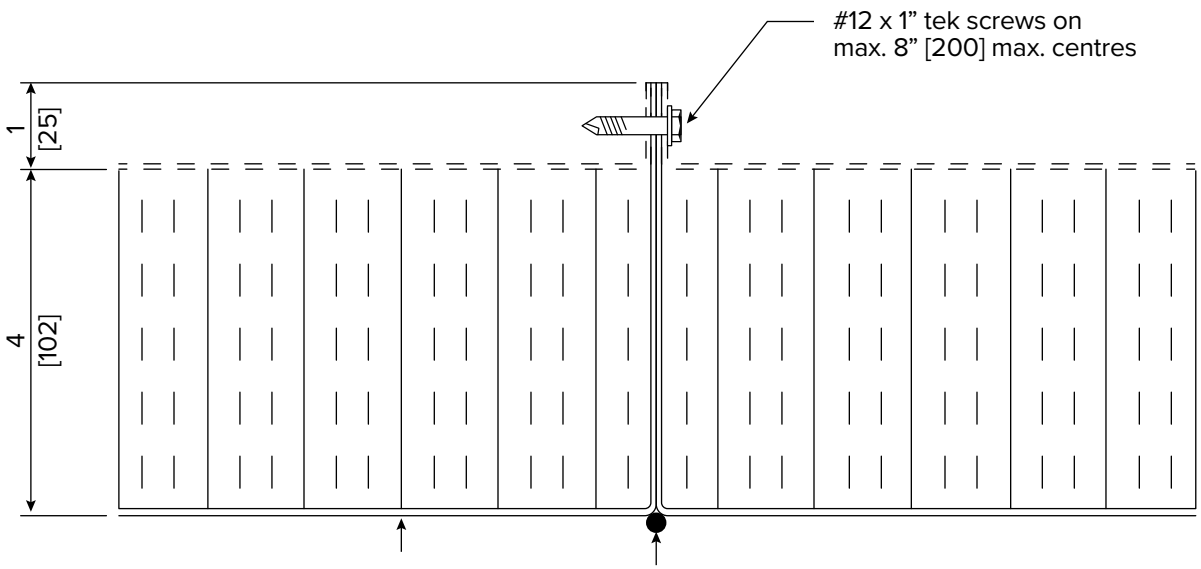

CONNECTION AT SEAM

DETAIL 4

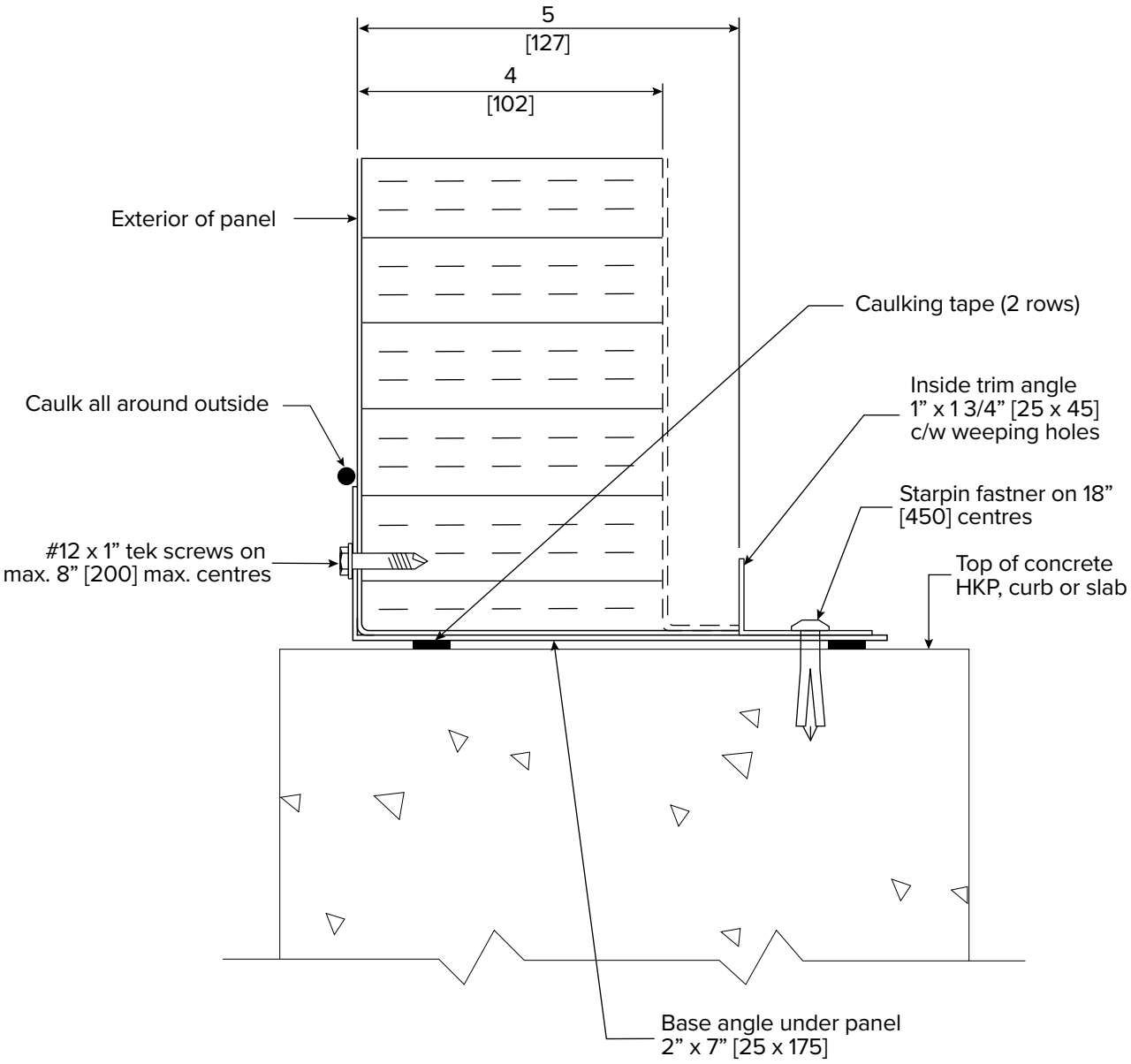

CONNECTION AT FLOOR

DETAIL 5

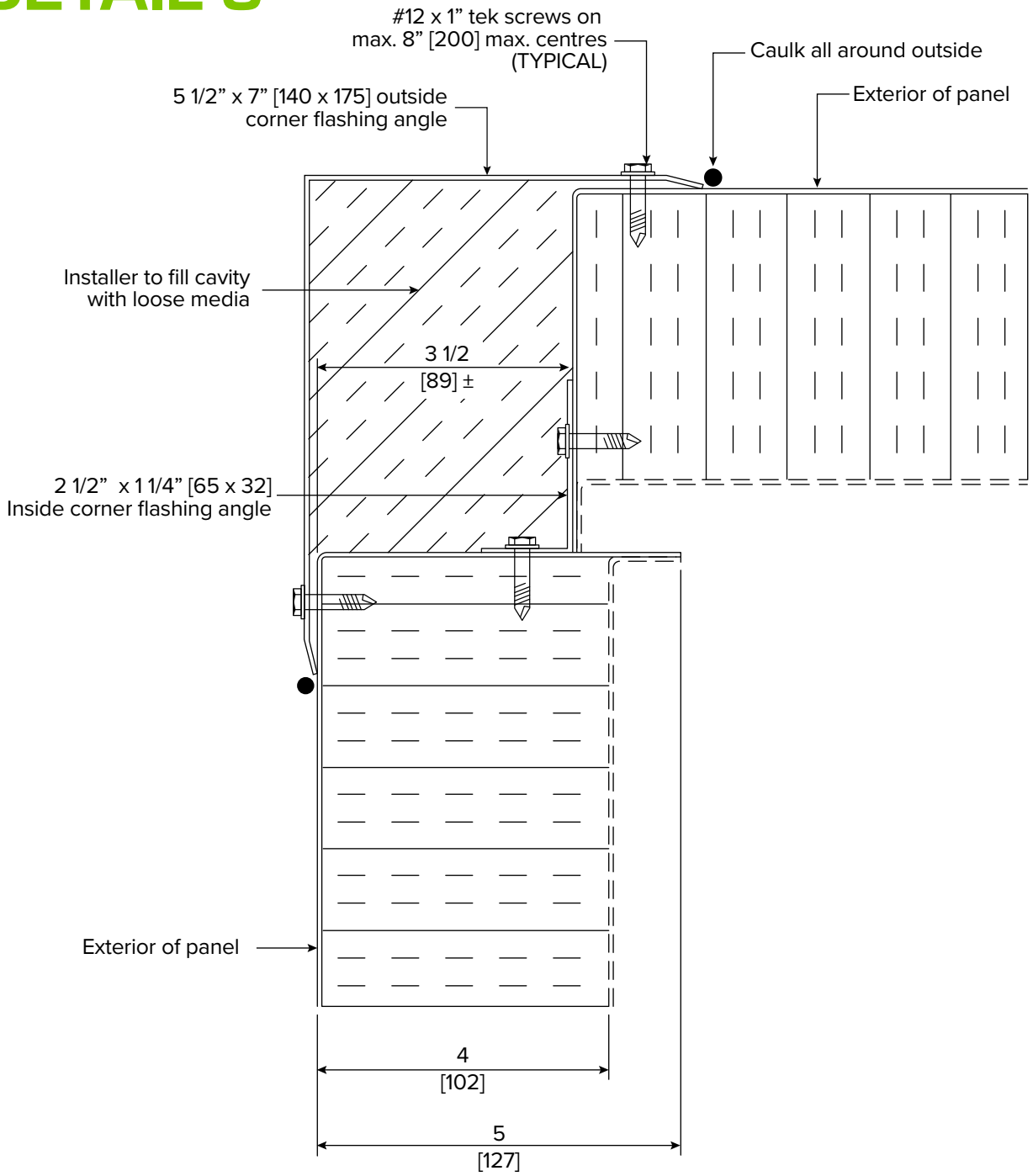

CORNER CONNECTION

DETAIL 6

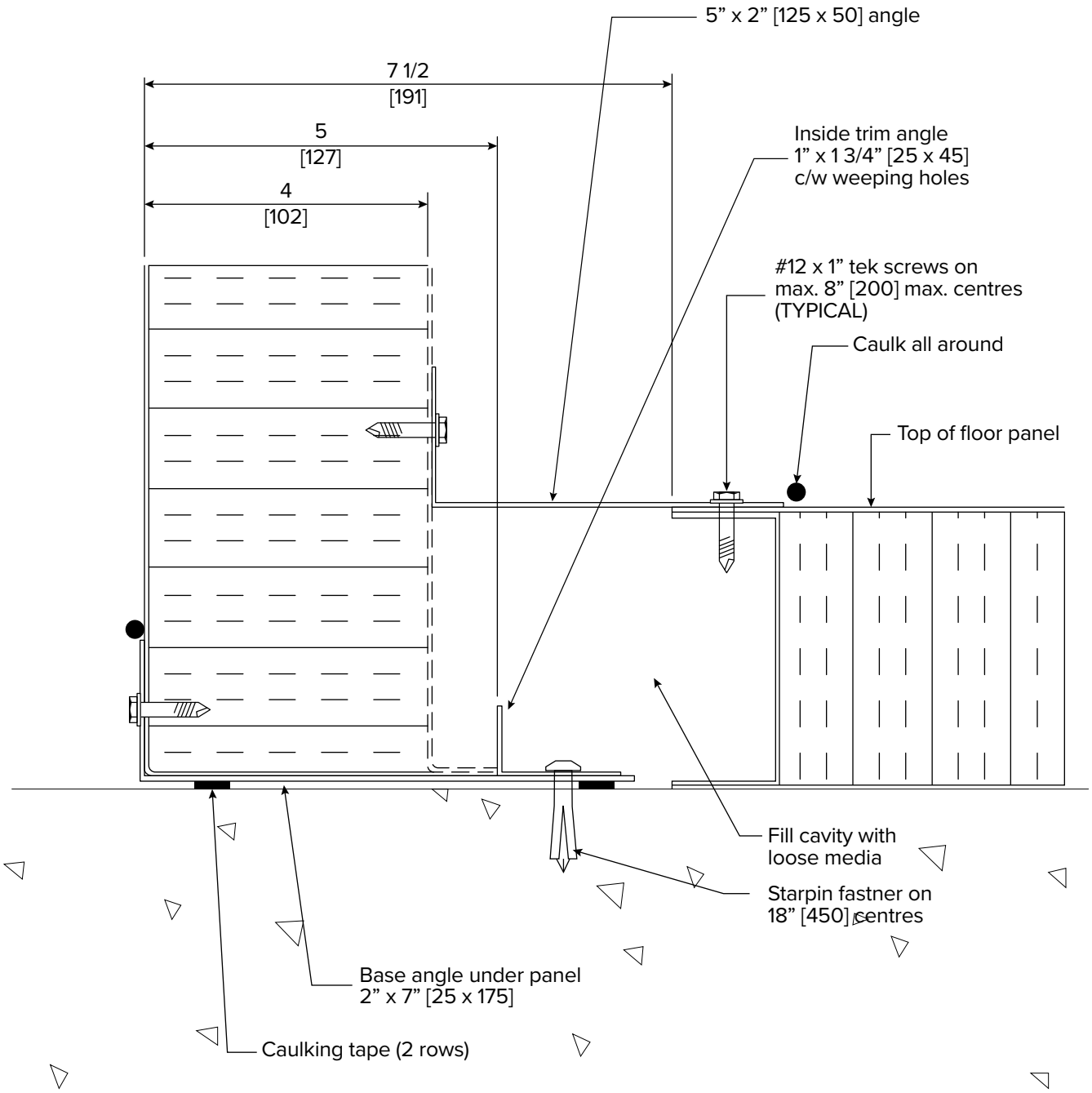

FLOOR PNALE TO IFBC WALL PANEL

DETAIL 7

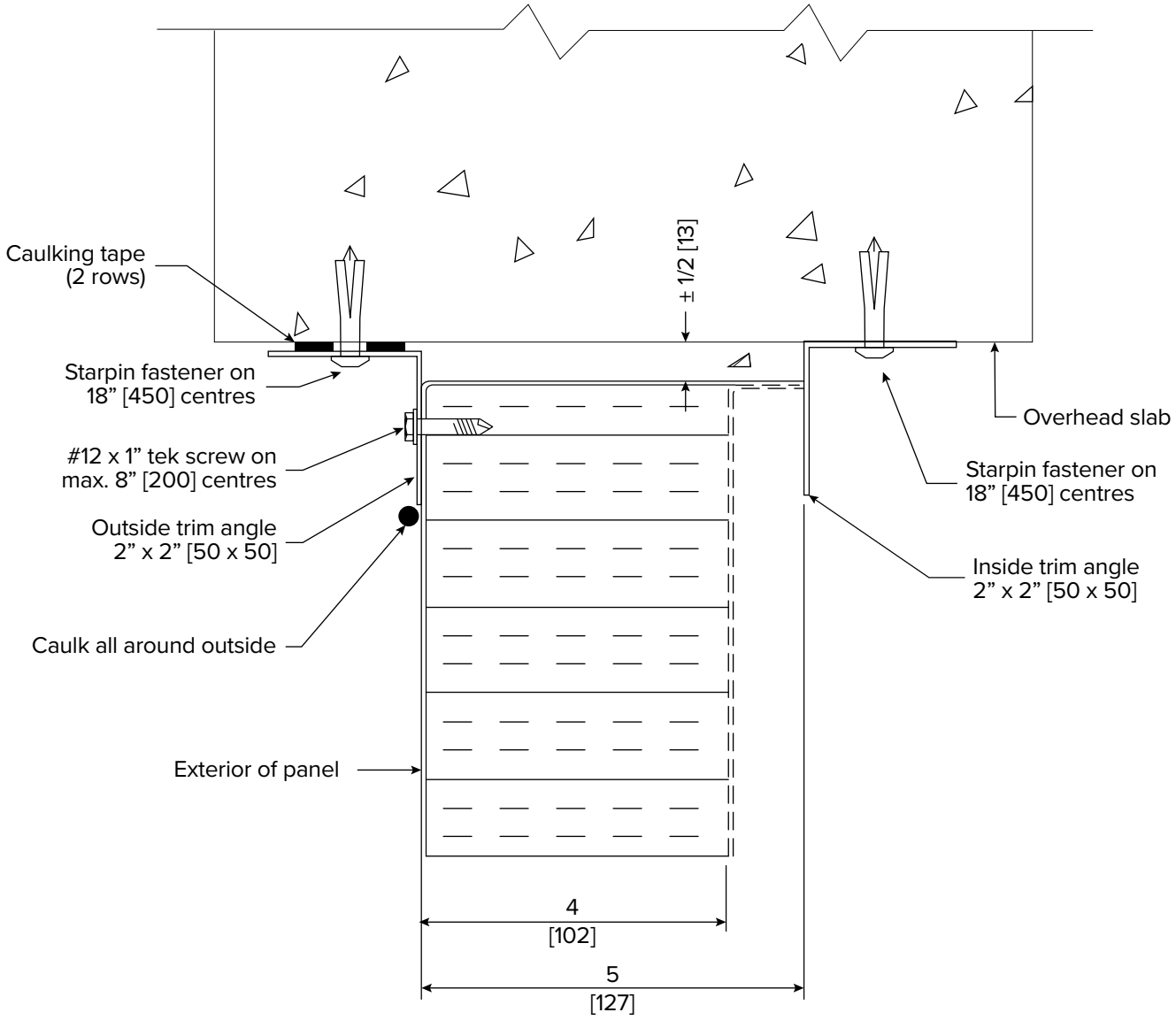

TYPICAL CONNECTION TO OVERHEAD SLAB

DETAIL 8

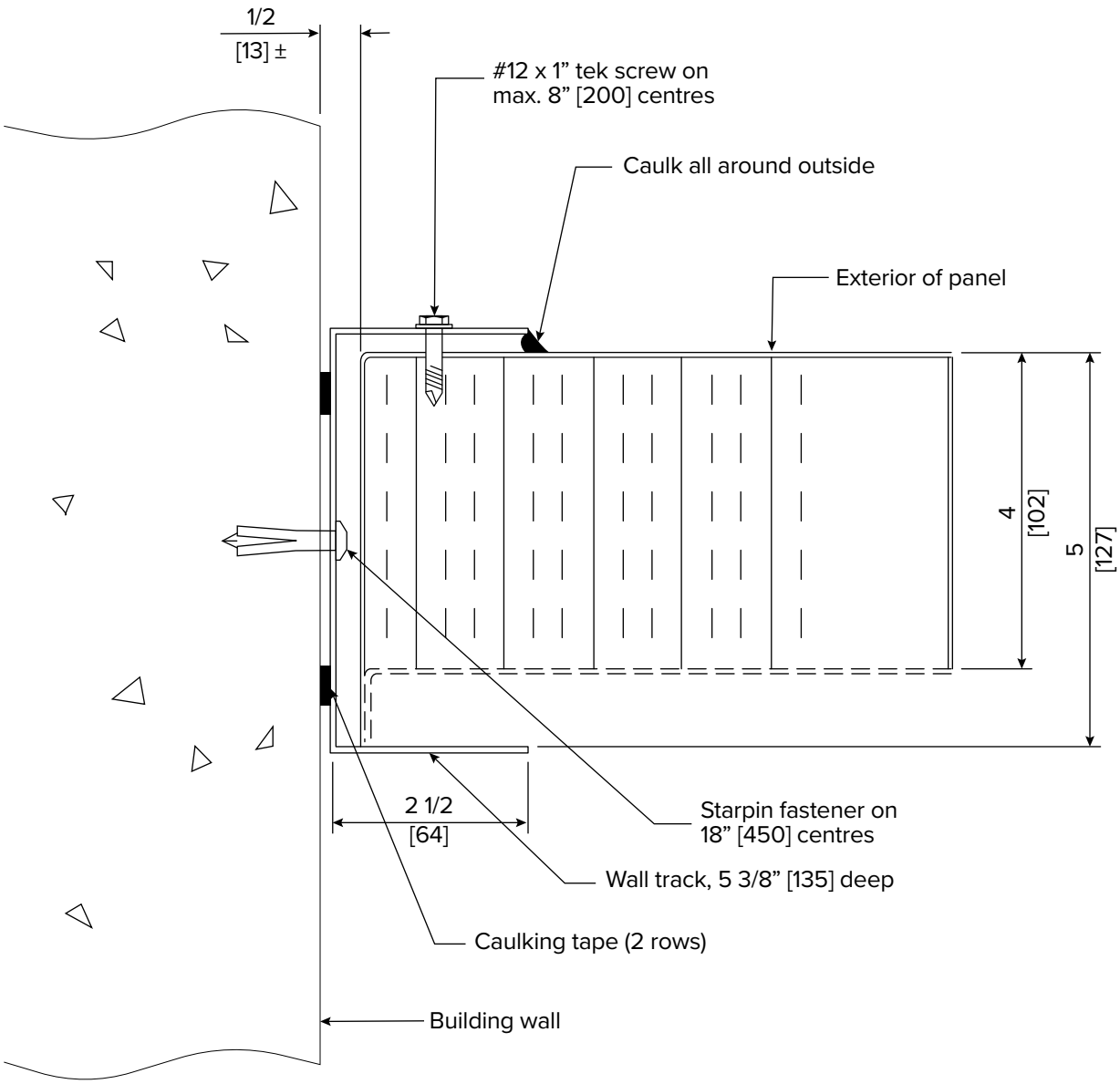

CONNECTION TO BUILDING WALL

VIBRO-ACOUSTICS®
A Swegon Group company

PS2

Acoustic Panels
IFBC Panel

Octave Band	125	250	500	1000	2000	4000
Transmission Loss	21	28	39	52	53	56
Absorption	21	28	39	52	53	56

Performance

> Performance based on a 4" thick panel with 18ga outer sheet and 22ga inner liner filled with Acoustic grade media

Advantages

> Easy to assemble at job site
> Individual panels can be disassembled easily without dismantling the whole assembly
> Pressure rating up to 10" W.G.
> Well suited for large plenums walls due to inherent strength

Applications

> Enclosures for noisy equipment
> Acoustically sensitive rooms and booths
> Air handling unit casings and plenums
> Sound testing facilities
> Acoustic Barriers for noise by law compliance

Construction

> Roll formed inner and outer skin
> Maximum 16ga galvanized or stainless steel
> Thermal/Acoustical media sandwiched between skins
> Internal stiffening of panel
> Stiffeners installed internally to provide strength

Options

> Various panel sizes and thickness
> Panels can be built to required sizes
> Panel can be built with required materials like Galvanized, stainless, Galvanneal, pre-painted or Aluminum
> Doors, windows, access panels and openings can be provided as required
> Thermal break
> Lining for acoustic media (Tedlar, Mylar and Fiberglass cloth)

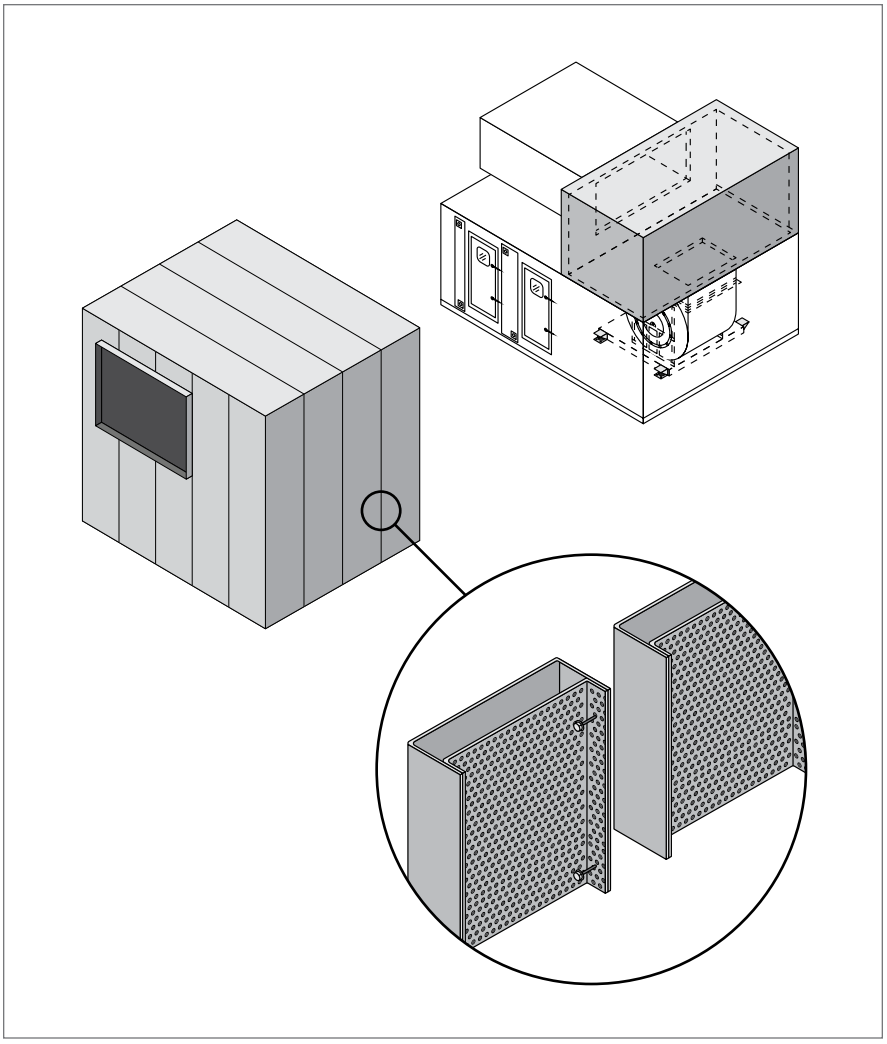

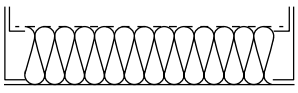

Solid / Perforated

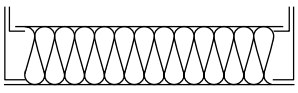

Solid / Solid

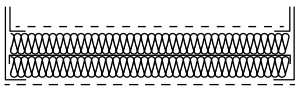

Septum

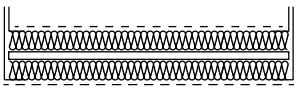

Added Mass Core

PS1 Panel Strength

Panel Deflection Curves

Curves based on panel self weight, and a 10 in. wg. static pressure operating load.

4" Panel with 16 ga FACE SHEET, 18 ga CHANNELS and 22 ga LINER

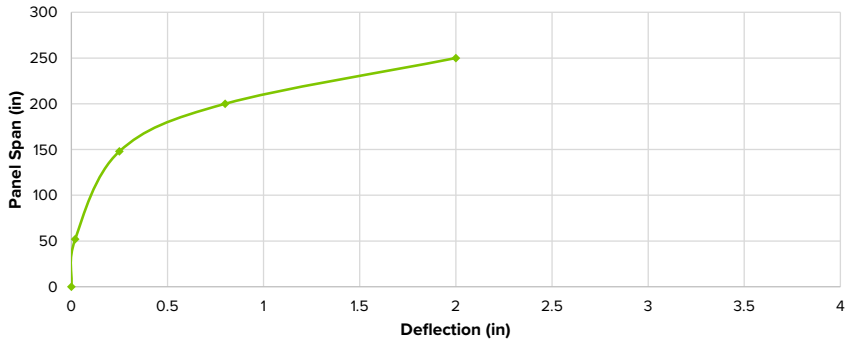

4" Panel with 18 ga FACE SHEET, 20 ga CHANNELS and 22 ga LINER

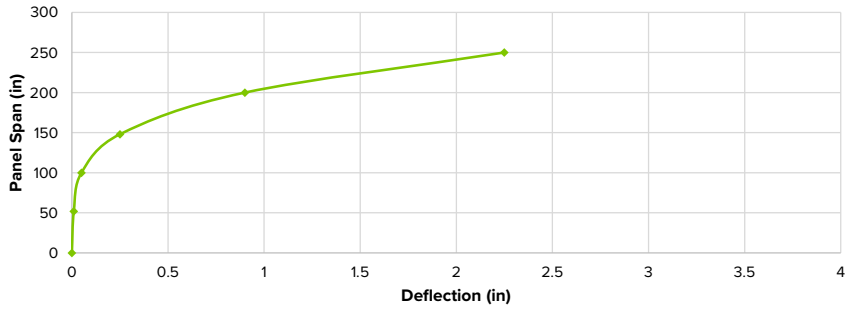

2" Panel with 16 ga FACE SHEET, 18 ga CHANNELS and 22 ga LINER

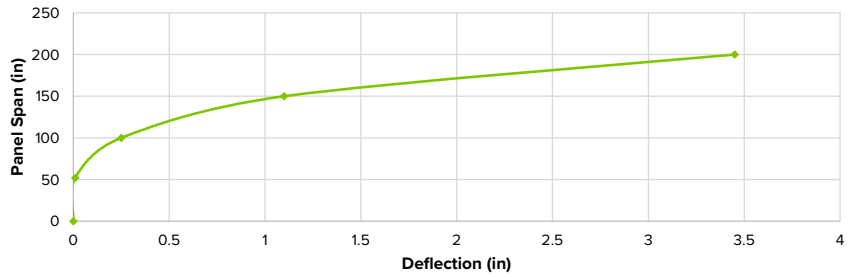

DETAIL 1

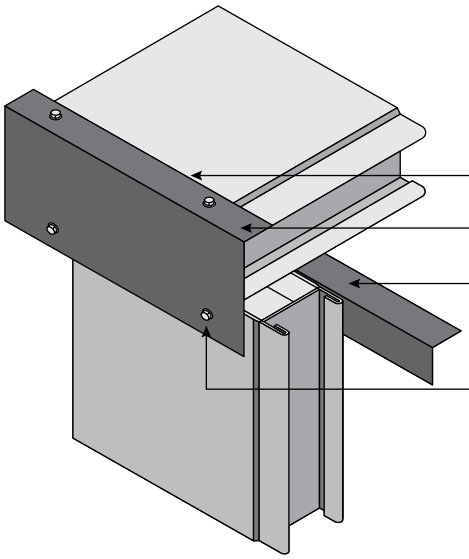

WALL TO ROOF CONNECTION

- Continuous bead of sealant along outside seams
- 2 x (panel width+2) outside corner flashing
- 2 x 2 inside corner flashing
- #12 x 1” tek screw on max. 12” centers

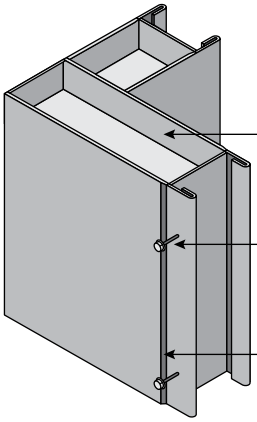

ONE PIECE CORNER PANEL

- Installer to fill all cavities with media (typical)
- #12 x 1” tek screw on max. 12” centers
- Continuous bead of sealant along outside seams

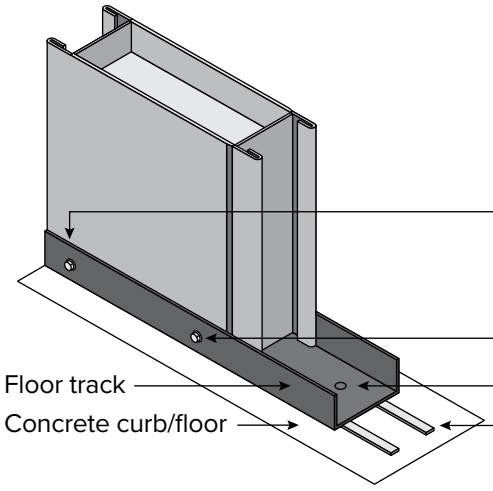

WALL PANEL TO FLOOR/CURB

- Continuous bead of sealant along outside seams
- #12 x 1” tek screw on max. 12” centers
- Floor track
- ¼ x 1-1/4 starpin fastener on max. 24” centers
- Concrete curb/floor
- 2 rows caulking tape

DETAIL 2

WALL PANEL TO WALL CONNECTION

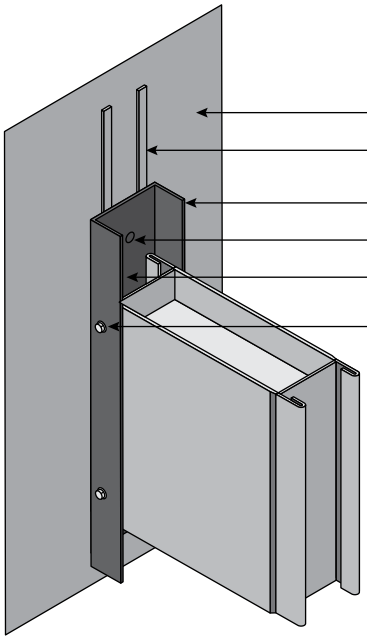

- Existing concrete wall
- 2 rows caulking tape
- Wall channel
- ¼ x 1-1/4 starpin fastener on max. 24” centers
- Installer to fill all cavities with media (typical)
- #12 x 1” tek screw on max. 12” centers

TWO PIECE CORNER PANEL

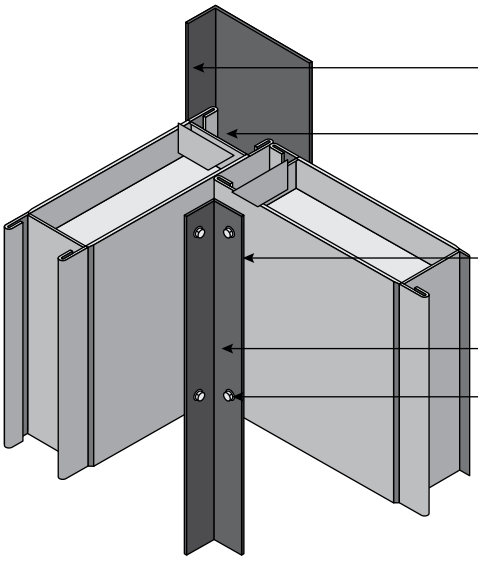

- 2 x (panel width+2) corner flashing
- Installer to fill all cavities with media (typical)
- Continuous bead of sealant along outside seams
- 2 x 2 corner flashing
- #12 x 1” tek screw on max. 12” centers

FLOOR PANEL TO WALL PANEL

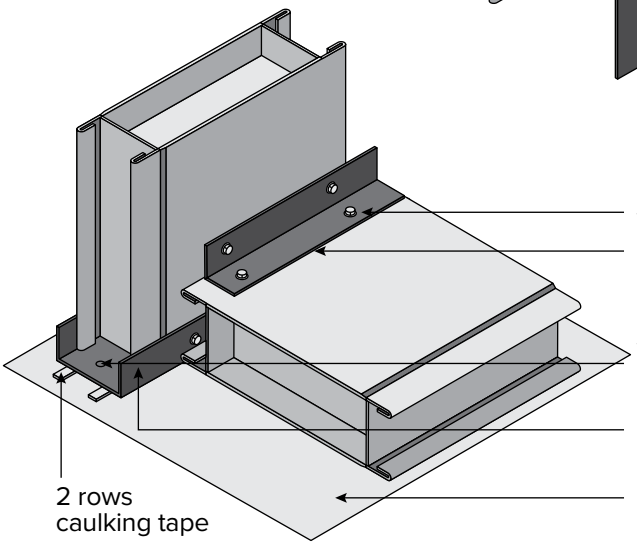

- #12 x 1” tek screw on max. 12” centers
- 2 x 2 corner flashing
- 1/4 x 1-1/4 starpin fastener on max. 24” centers
- Floor track
- Concrete floor
- 2 rows caulking tape

VIBRO-ACOUSTICS®
A Swegon Group company

DETAIL 3

WALL PANEL OVER 12' HIGH CONNECTION

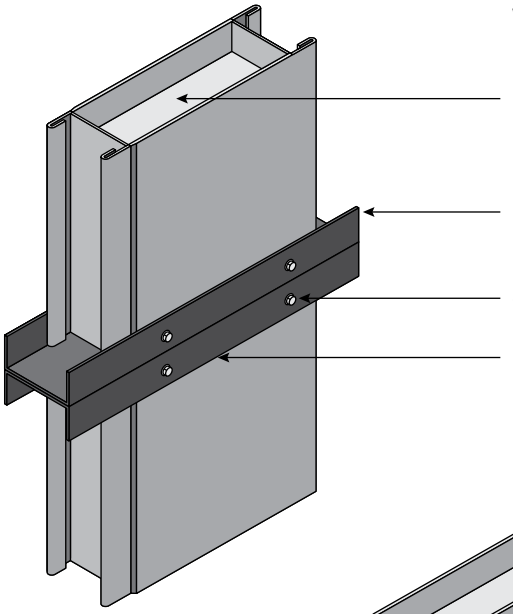

- Installer to fill all cavities with media (typical)
- Heavy gauge girt channel
- #12 x 1" tek screw on max. 12" centers
- Continuous bead of sealant along outside seams

SEPTUM PANEL CONNECTION

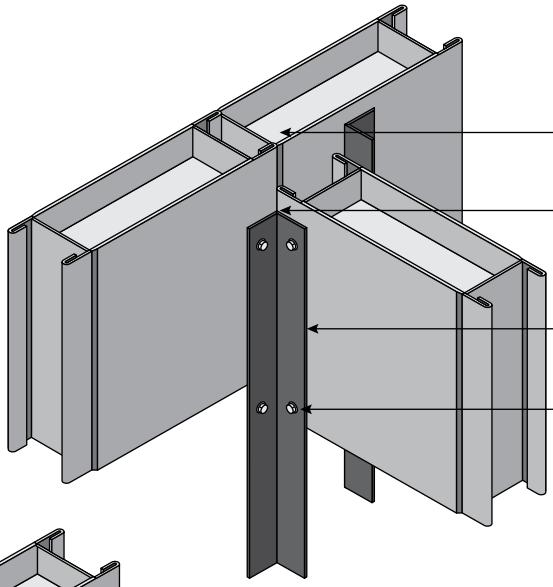

- Installer to fill all cavities with media (typical)
- Continuous bead of sealant along outside seams
- 2 x 2 corner flashing
- #12 x 1" tek screw on max. 12" centers

PANEL TO PANEL CONNECTION

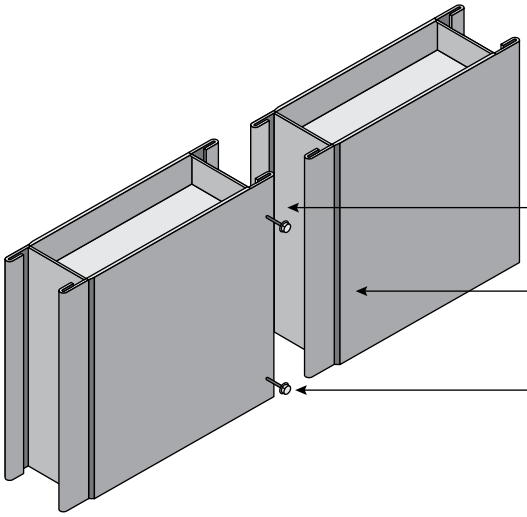

- Installer to fill all cavities with media (typical)
- Continuous bead of sealant along outside seams
- #12 x 1" tek screw on max. 12" centers

VIBRO-ACOUSTICS®
A Swegon Group company

DETAIL 4

HORIZONTAL SEPTUM CONNECTION

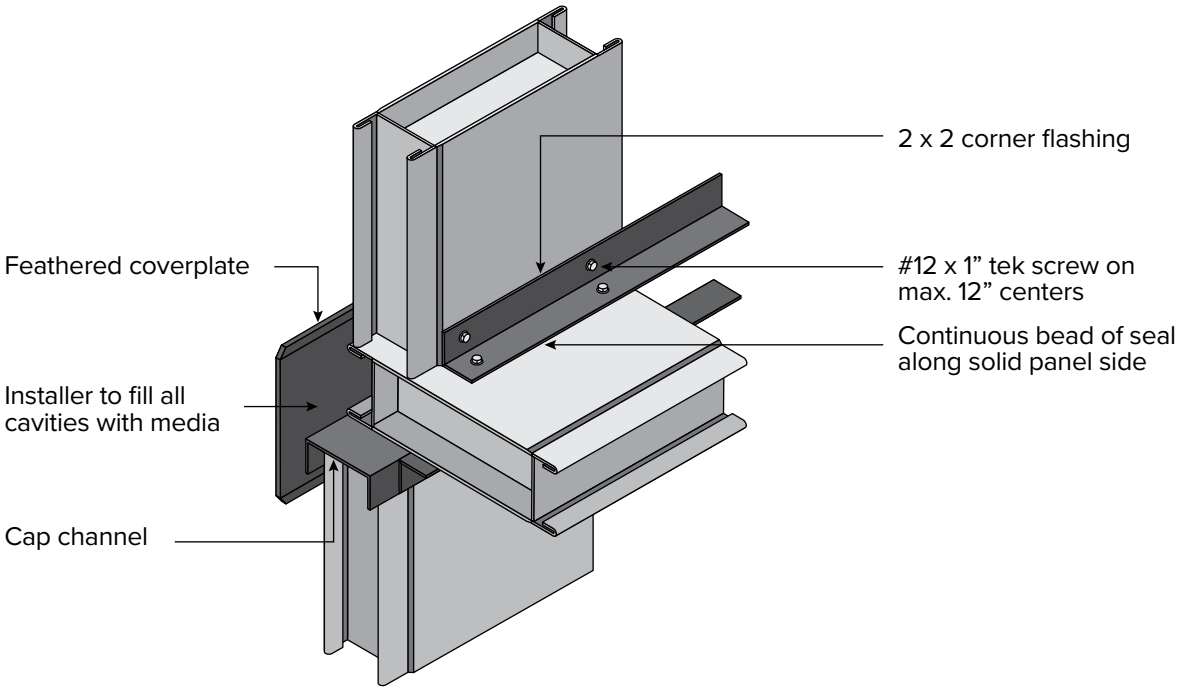

PANEL OPENING CONNECTION

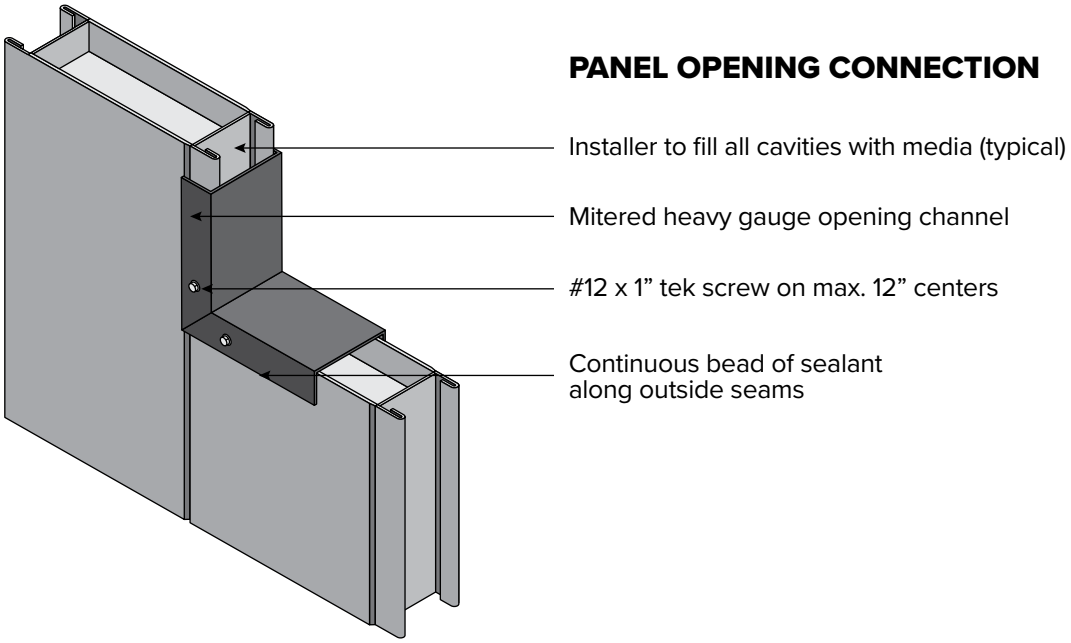

DETAIL 5

ROOF PANEL TO BEAM CONNECTION

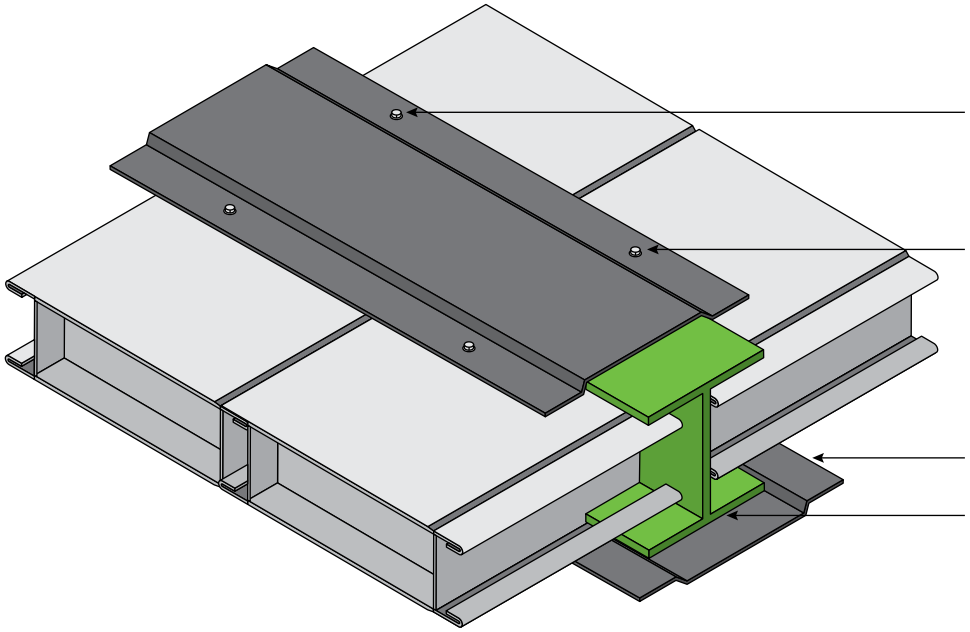

WALL PANEL TO COLUMN CONNECTION

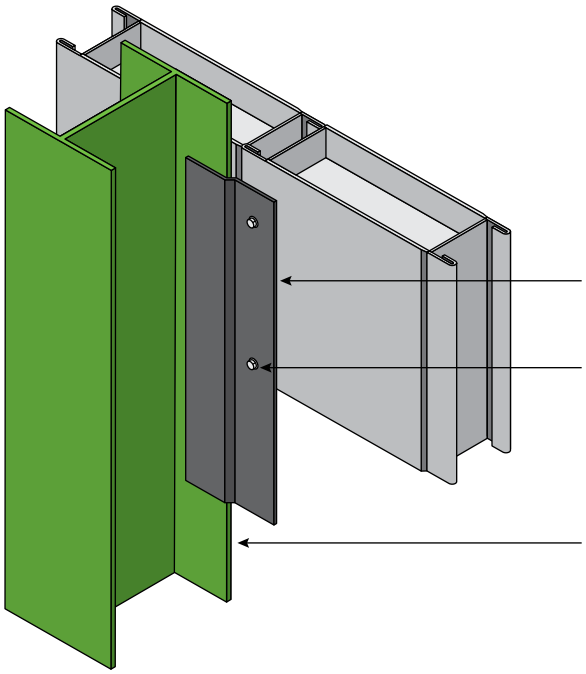

BARRIERS

SPECIFICATION

Section 15xxx – Vibro-Acoustics Acoustic Barrier Walls

Part 1 – General

1.1 Related Documents

A. **General:** Comply with the general Conditions and all applicable Contract Documents.

1.2 Work Included: Each Enclosure and Plenum shall be a complete assembly with sealant, assembly hardware (bolts, screws etc.), access doors.

1.3 Submittals

A. **Product Data:** Submit manufacturer's technical product data for enclosure or plenum showing dimensional, weights, capacities, ratings, finishes of materials, and installation instructions.

B. **Shop Drawings**: Submit shop drawings showing unit dimensions, weight loading, Required clearances, field connection details and methods of support. Draw to a scale of 3/8" to one foot, using same sheet size as Contract Drawings. Including dampers and duct connections

2.2 Quality Assurance

A. **Manufacturer's Responsibility:** Enclosure or plenum manufacturer shall have sole source responsibility for the design, factory fabrication and supply of all components and equipment as noted below. Provide enclosure/plenums that are a product of an equipment manufacturer regularly engaged in the production of such product. Unit components and equipment fabricated and supplied by the contractor will not be permitted.

B. **Contractor's Responsibility:** The Contractor shall be responsible for the field assembly of the enclosure/plenum per the instructions and submittal documents supplied by the manufacturer. The Contractor shall provide the manufacturer with all field dimensions, mounting locations and duct openings as required to coordinate the design and fabrication of the enclosure or plenum.

C. **Codes and Standards:** Provide enclosures and plenums conforming to the following:

1. National Fire Protection Association (NFPA): Provide enclosure/plenum internal insulation complying with NFPA 90A, "Standard for the Installation of Air Condition and Ventilating Systems".

2. Sheet Metal and Air Conditioning Contractors' National Association, Inc. (SMACNA): Comply with applicable SMACNA standards including "HVAC Duct Construction Standards - Metal and Flexible".

2.2 Delivery, Storage and Handling

A. **Delivery:** Deliver components on factory shipping skids Pack small components in factory-fabricated protective containers.
B. **Handling:** Handle components carefully to avoid damage to components, enclosures, and finishes. Do not install damaged components; replace and return damaged components to product manufacturer.
C. **Storage:** Store components in a clean dry place and protect from weather and construction traffic.
D. **Unloading:** Comply with manufacturer's rigging and installation instructions for unloading and moving them to final location

Part 2-Product:

2.1 Manufacturers

A. Acceptable manufacturers: Vibro-Acoustics

2.2 Enclosures or Plenums

A. Physical dimensions must be maintained as shown on the contract drawings. If dimensions are different from that shown, the owner and engineer must be advised at the time of bid review.

B. Design enclosure/plenum to be suitable for the maximum, total wind loading under design conditions.

2.3 Construction

A. **Barrier Panels:** Panels shall be 4" tongue and groove type. The exterior sheet shall be a minimum of 18 gauge (1.18 mm) G90 galvanized steel. The interior sheet shall be a minimum of 22 gauge (0.78 mm) G90 galvanized perforated steel. Panels shall be filled with fiberglass acoustic media.

B. **Removable Panels:** Where indicated on the plans, bolted panels of the Internal Flange Butt Connection type shall be provided for equipment removal. Panels shall be 4" with construction as noted above.

C. **Structural Support Steel:** Structural steel shall be provided by the enclosure or plenum manufacturer so the maximum deflection of the assembled panels is L/180. Structural to structural steel connections shall be fully welded.

D. **Media:** Media shall be incombustible, acoustical quality, shot-free fiberglass insulation with long, resilient fibers bonded with a thermosetting resin. Fiberglass shall be packed with 15% compression during panel assembly. Media shall be bacteria and fungus resistant and conform to irregular surfaces. Media shall not cause or accelerate corrosion of aluminum or steel. Mineral wool will not be permitted as a substitute for fiberglass.

E. **Access Doors:** Doors shall be provided as noted on the plans. Doors shall be 4" x 24" wide x 72" high with the same construction as the acoustic panels, except that the interior sheet shall be solid. Doors shall be mounted in a 10 ga. galvanized steel angle frame with a single "P" gasket. Hardware shall include 2 cam-type Ventlok 310 latches and 2 butt hinges. Where indicated, doors shall be supplied with 12" x 12" inspection windows, double-glazed with wire reinforced glass mounted in a neoprene U-gasket.

F. **Performance:** The acoustical performance of the panels shall be equal to or greater than the following:

Octave Band Hz	63	125	250	500	1K	2K	4K	8K
Transmission Loss	18	21	27	37	48	54	54	54
Absorption Coefficients	-	0.7	0.9	0.99	0.99	0.9	0.8	-

The panel design shall have maximum combustion ratings as noted below when tested in accordance with ASTM E84, NFPA 255 or UL 723.

Panel materials including glass fiber:
Flamespread Classification: 15
Smoke Development Rating: 5

PANELS

ABSORPTION PANEL
TYPICAL MOUNTING DETAIL

VIBRO-ACOUSTICS®
A Swegon Group company

DETAIL 1

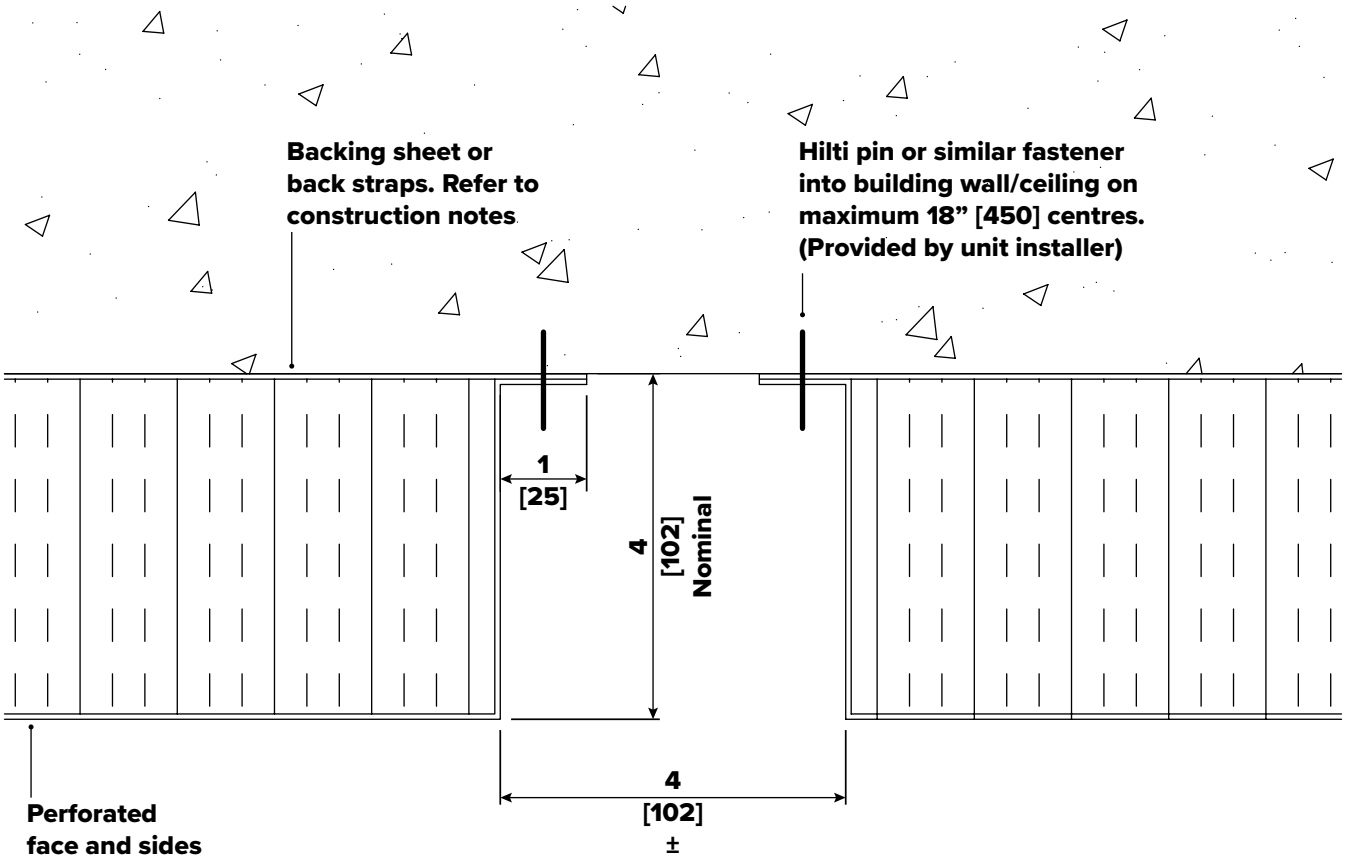

Attachment to Wall or Ceiling

ABSORPTION PANEL
TYPICAL MOUNTING DETAIL

VIBRO-ACOUSTICS®
A Swegon Group company

DETAIL 2

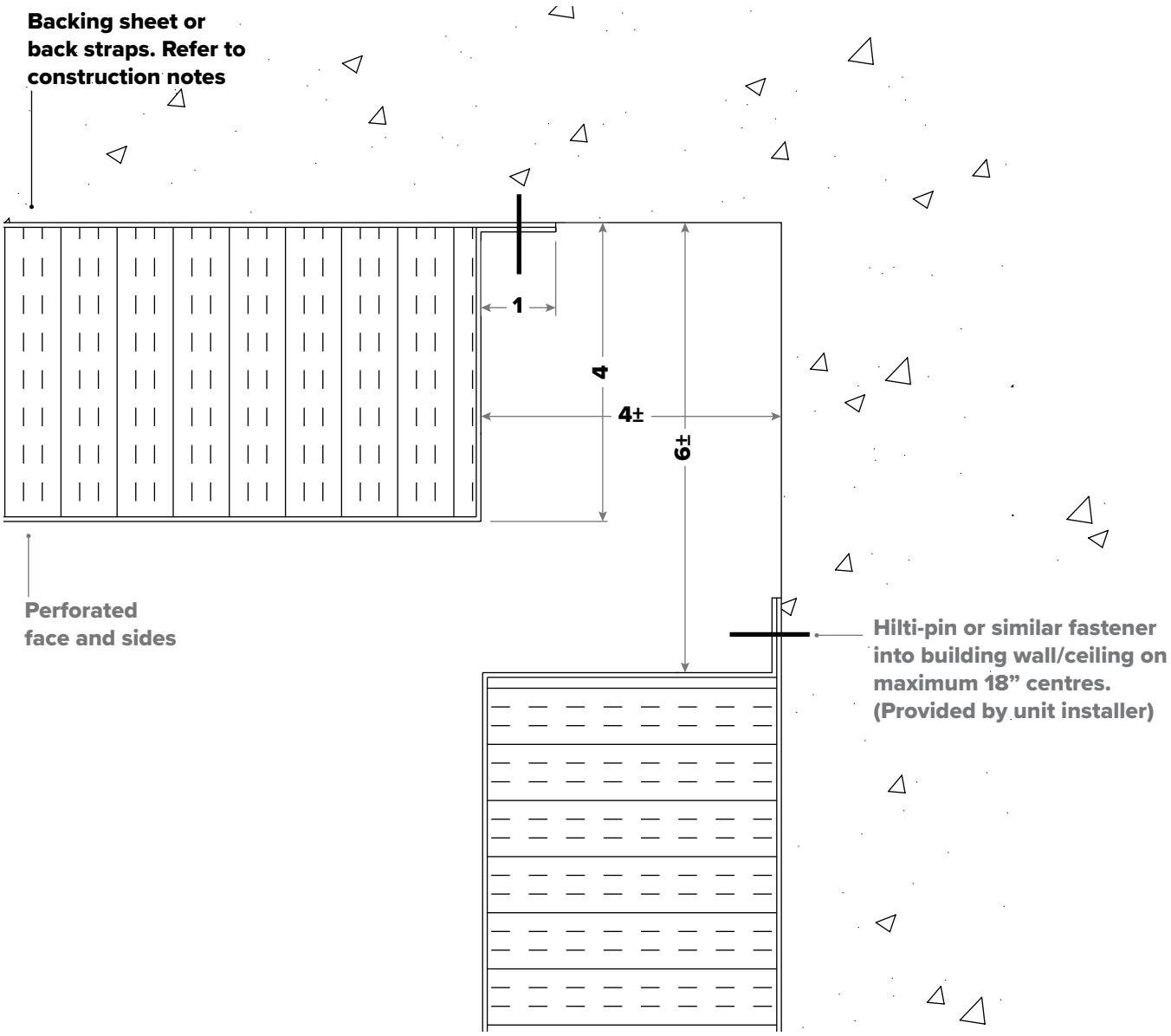

Attachment at Corner

ABSORPTION PANEL
TYPICAL MOUNTING DETAIL

VIBRO-ACOUSTICS®
A Swegon Group company

DETAIL 3

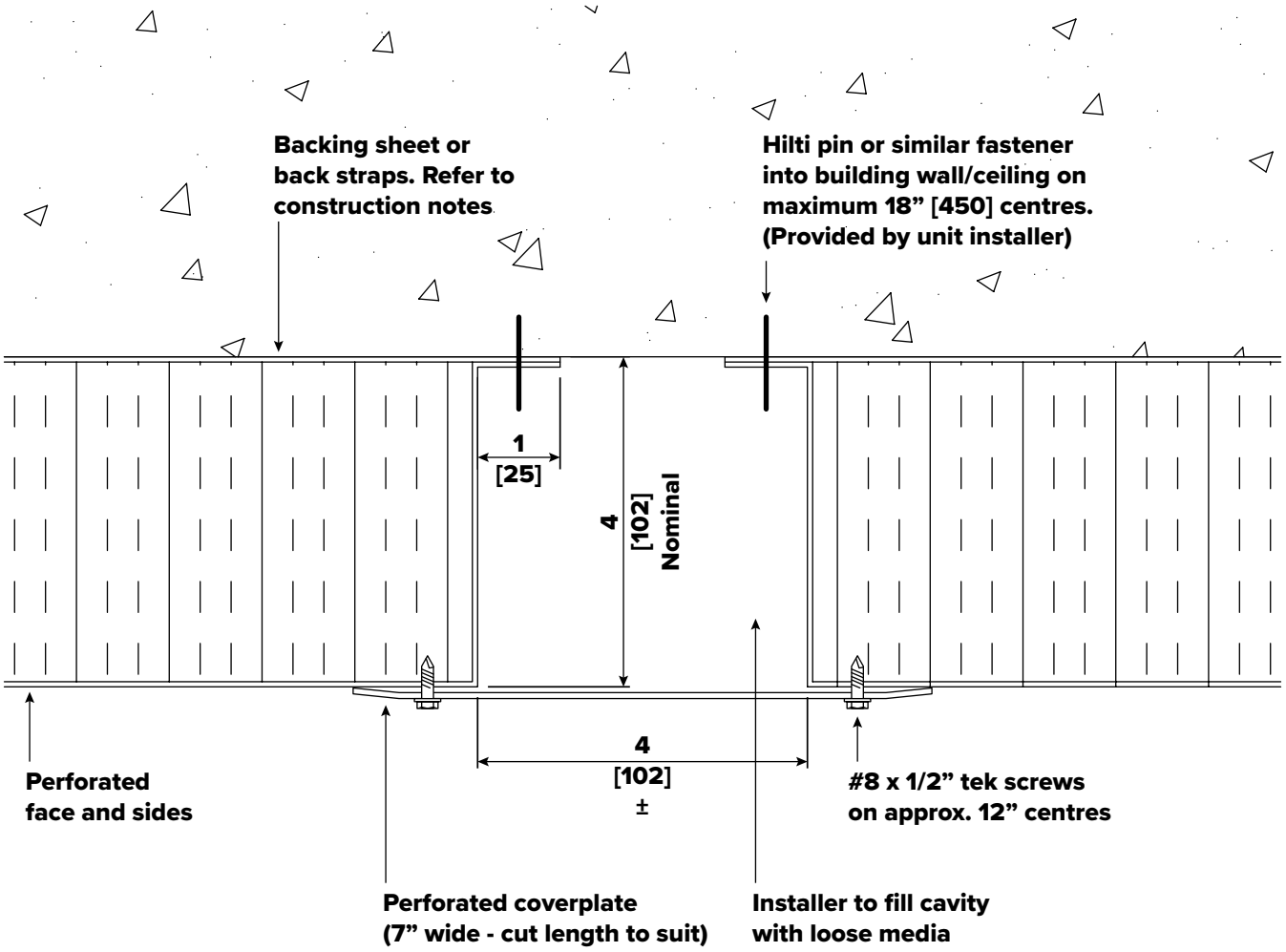

Optional Detail for Full Surface Coverage

VIBRO-ACOUSTICS®
A Swegon Group company

PS3-2

Absorption Panel
2”

Absorption panels are used to create sound absorbing surfaces using existing concrete or metal walls to reduce reflective sound energy. They also serve to enhance the transmission loss of walls. Ideal for both commercial and industrial applications with new and retrofit applications.

They are single skin panels with acoustic media within and can be attached to existing walls. The acoustic media then gets sandwiched between the panel skin and the wall.

Octave Band	125	250	500	1000	2000	4000
Acoustic Absorption Co efficient	0.3	0.7	0.9	0.99	0.9	0.8

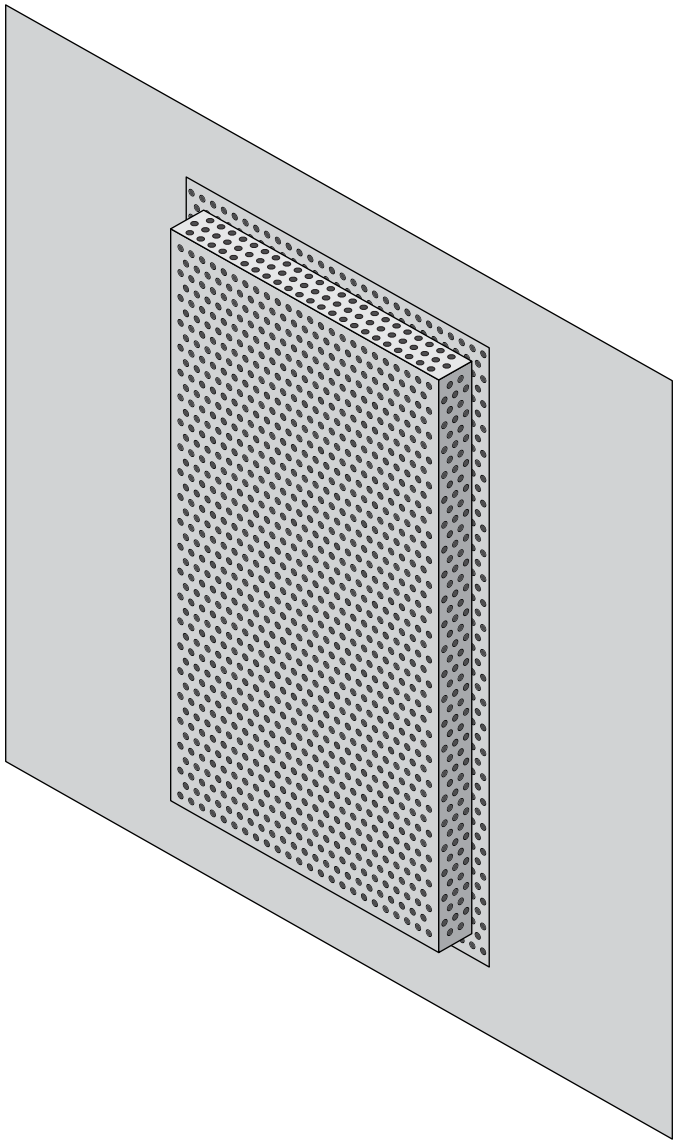

Performance
> Construction: 2” thick, 22 ga outside sheet

Advantages
> Can be used with existing walls
> Easy to install. Attached to walls using self tapping screws (metal walls) or star-pin screws (for concrete).

Applications
> Lining walls of mechanical rooms, generator and turbine halls, generator intake and exhaust shafts and parking garage shafts.
> Lining of walls adjacent to noisy equipment to avoid reflection.

Construction
> Single skin construction with flanges to attach to walls
> Shipped with backstraps-Backing skin available
> Formed outer skin
> Pre-drilled mounting holes
> Maximum 10 ga galvanized or stainless steel
> Maximum length of 144″
> Thermal/Acoustical material behind outer perforated outside skin
> Internal stiffening of panel

Options
> Various panel sizes and thickness
> Alternate materials
> Insulation covering – Mylar, Tedlar, Fiberglass cloth

VIBRO-ACOUSTICS®
A Swegon Group company

PS3-4

Absorption Panel
4”

Absorption panels are used to create sound absorbing surfaces using existing concrete or metal walls to reduce reflective sound energy. They also serve to enhance the transmission loss of walls. Ideal for both commercial and industrial applications with new and retrofit applications.

They are single skin panels with acoustic media within and can be attached to existing walls. The acoustic media then gets sandwiched between the panel skin and the wall.

Octave Band	63	125	250	500	1000	2000	4000	8000
Transmission Loss	-	-	-	-	-	-	-	-
Absorption	-	0.7	0.9	0.99	0.99	0.9	0.8	-

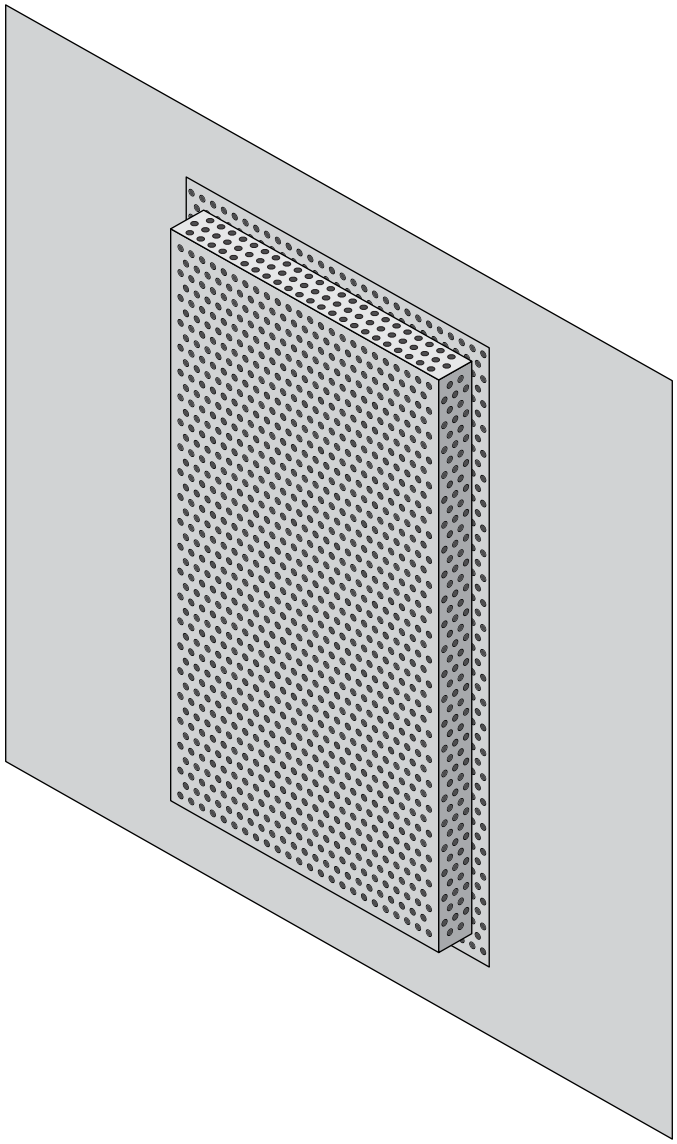

Performance
> Construction: 4” thick, 22 ga outside sheet

Advantages
> Panels are self-aligning and interlocking
> Easily installed in minimum of time
> Excellent installed appearance
> Ideal for long length (strong and low cost)

Applications
> Around noisy equipment
> Rooms and booths
> Air handling units and plenums
> Testing facilities

Construction
> Single skin construction with flanges to attach to walls
> Shipped with backstraps-Backing skin available
> Formed outer skin
> No backing skin
> Pre-drilled mounting holes (optional)
> Maximum 10 ga galvanized or stainless steel
> Maximum length of 144″
> Thermal/Acoustical material behind outer perforated outside skin
> Internal stiffening of panel

Options
> Various panel sizes and thickness
> Alternate materials
> Insulation covering – Mylar, Tedlar, Fiberglass cloth

FLOATING FLOORS

FLOATING FLOORS FORM WORK

VIBRO-ACOUSTICS®
A Swegon Group company

MEMBER VISCMA

tel: 416-291-7371 1-800-565-8401
fax: 416-291-8049 1-888-811-2264
web: www.vibro-acoustics.com
eml: info@vibro-acoustics.com

4AN 60TM Formwork Floating Floor Isolation Element

4AN 60TM

File No.: DS-4AN60TM-FW-001 Date: 13 Nov 2013
Supersedes: New Date: New

4AN 60TM

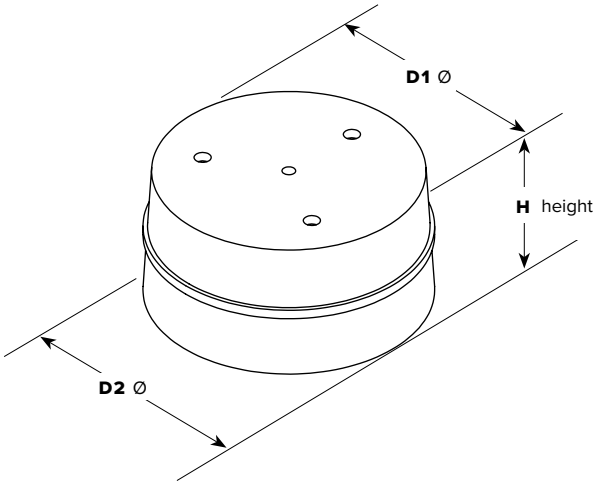

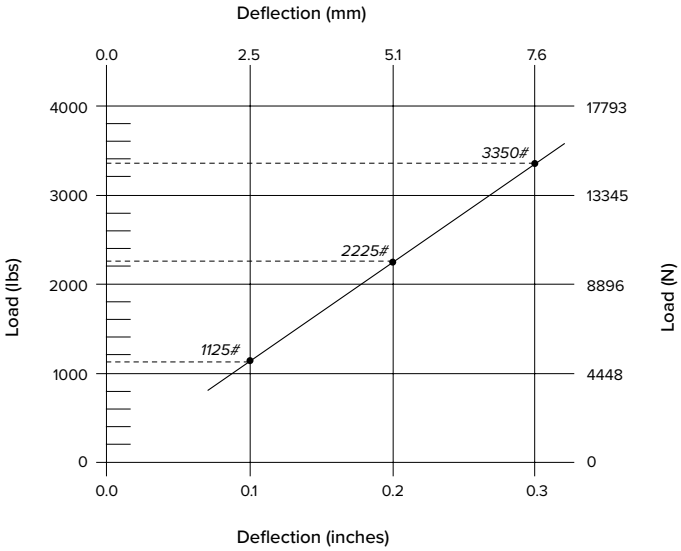

DIMENSIONS

Model	D1 Ø		D2 Ø		H	
	in	mm	in	mm	in	mm
4AN 60TM	4	102	4 1/4	108	2 1/8	54

NOTES

- 60 durometer AASHTO neoprene isolation element
- Nominal design load = 2225 lbs (9897 N)
- Nominal design deflection = 0.2 in (5 mm)

Meets AASHTO Specifications				
ASTM Test #	**Property**	**Units**	**Spec**	**Result**
D2240	hardness	Shore "A"	60+/–5	pass
D412	tensile	psi	2500 min	pass
D412	elongation	%	350 min	pass
D573	heat age 70 hrs @100 C	change -hard.(pts) - tensile (%) - elong (%)	+15 –15 –40	pass
D395B	compression set	%	35 max	pass
D471	#3 oil swell	%	100	pass
D572	oxygen bomb 48 hrs @ 70 C, 300 psi retention - tensile % - elongation %	 % %	 75 75	pass
D1171	ozone resist 168 hrs @ 40C @ 50 pphm		no cracks	pass
D2137	cold temp	deg. C	–40	pass
D257	volume resistivity	Ω/cm	na	1.2″ × 10″ static conductive

Project:			COMMENTS:
Customer:			
Consultant:			
Dwg No.:	Rev:	Drawn by:	
V-A Project Manager:			
TAG:			DATE:

VIBRO-ACOUSTICS®
A Swegon Group company

MEMBER VISCMA

tel: 416-291-7371 1-800-565-8401
fax: 416-291-8049 1-888-811-2264
web: www.vibro-acoustics.com
eml: info@vibro-acoustics.com

NR230 Floating Floor Isolation Element

NR230

File No.: DS-NR230-001 Date: 22 Oct 2013
Supersedes: New Date: New

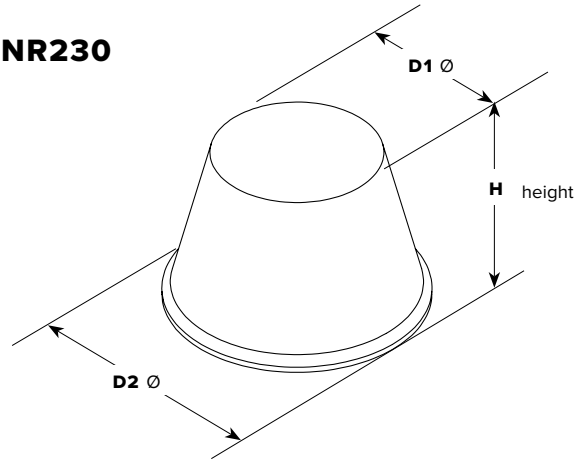

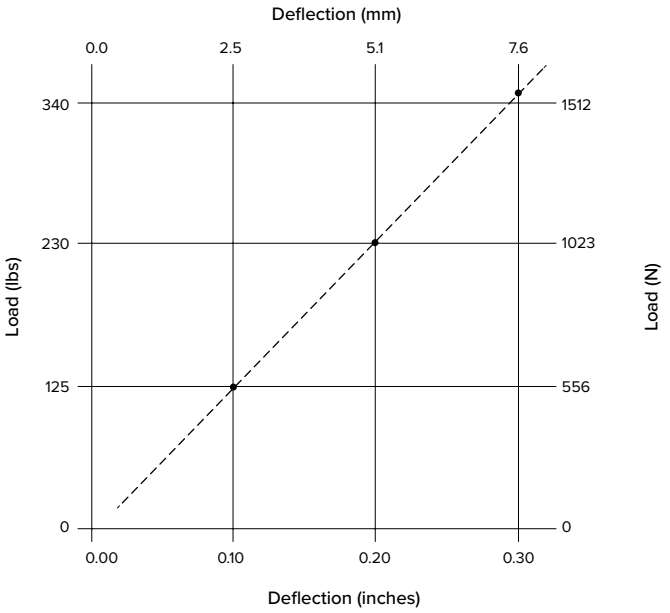

DIMENSIONS

Model	D1 Ø in	D1 Ø mm	D2 Ø in	D2 Ø mm	H in	H mm
NR230	**2**	51	**3**	76	**2**	51

NOTES

- 60 durometer AASHTO neoprene isolation element
- Nominal design load = 230 lbs (1023 N)
- Nominal design deflection = 0.2 in (5 mm)

Meets AASHTO Specifications				
ASTM Test #	**Property**	**Units**	**Spec**	**Result**
D2240	hardness	Shore "A"	60+/–5	pass
D412	tensile	psi	2500 min	pass
D412	elongation	%	350 min	pass
D573	heat age 70 hrs @100 C	change -hard.(pts) - tensile (%) - elong (%)	+15 –15 –40	pass
D395B	compression set	%	35 max	pass
D471	#3 oil swell	%	100	pass
D572	oxygen bomb 48 hrs @ 70 C, 300 psi retention - tensile % - elongation %	 % %	 75 75	pass
D1171	ozone resist 168 hrs @ 40C @ 50 pphm		no cracks	pass
D2137	cold temp	deg. C	–40	pass
D257	volume resistivity	Ω/cm	na	1.2" × 10" static conductive

Project:			COMMENTS:
Customer:			
Consultant:			
Dwg No.:	Rev:	Drawn by:	
V-A Project Manager:			
TAG:			DATE:

VIBRO-ACOUSTICS®
A Swegon Group company

MEMBER VISCMA

tel: 416-291-7371 1-800-565-8401
fax: 416-291-8049 1-888-811-2264
web: www.vibro-acoustics.com
eml: info@vibro-acoustics.com

Form Work Floating Floors
Installation Instructions

FF-FW

File No.: INS-FF-FW-001 Date: 21 Aug 2013
Supersedes: New Date: New

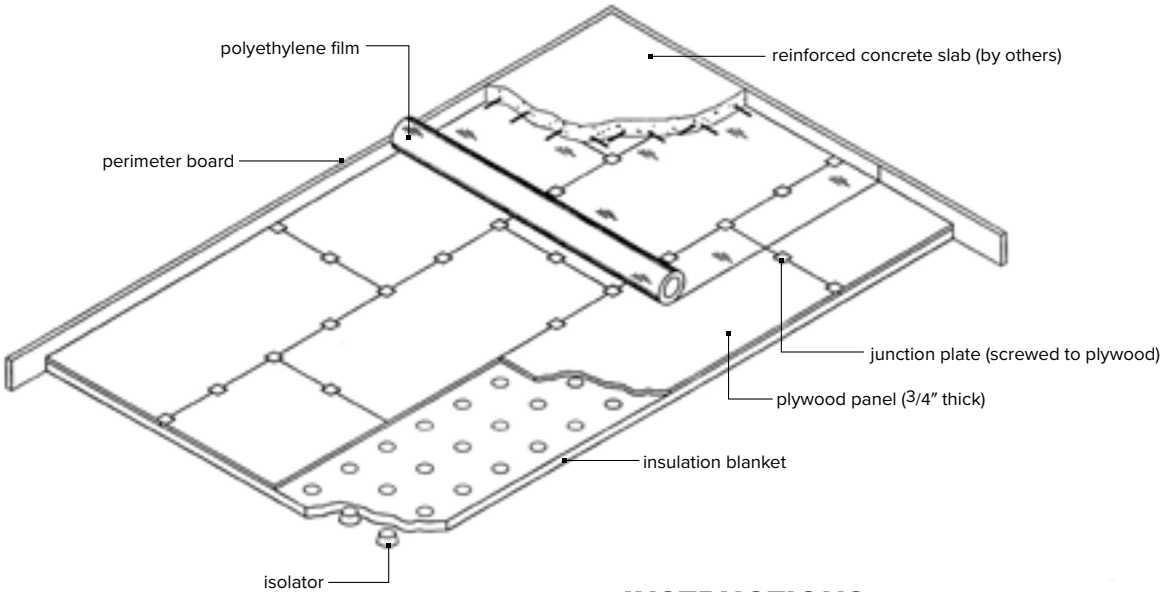

INSTRUCTIONS

1. Ensure that the structural slab is free of equipment and debris and that it is swept clean.
2. Cut and install perimeter board (as specified on installation drawing). Install around all side walls, curbs and columns. Height to be at least 1" above finished floating floor curb height.
3. All penetrations (piping, conduit and ductwork) passing through the floating floor must be isolated with perimeter board (see item #2), pre-compressed molded fiberglass sleeves, or metal sleeves packed with 1.5 lb. density insulation.
4. Locate start point. Draw pad grids and equipment outline on structural floor as per installation drawing. Install pads.
5. Install loose media (low density fiberglass) over structural slab. Completely cover the slab with media, allowing cut-outs for isolators. Alternatively, lay media batts between rows of isolators and fill spaces between isolators with cut strips.
6. Position plywood panels as per floor plan drawing and cut as required. Panels shall be butted together and fastened with junction plates at 24" centers. Stagger all joints if power tools are used. Be sure not to drive screws too hard to strip threads in plywood.
7. Install polyethylene vapour barrier. Overlap sheets 6" and extend over perimeter board by 8". Tape all seams to ensure water-tight joints.
8. Inspect polyethylene sheets for damage prior to pouring concrete and repair as necessary.
9. Install reinforcing rods and pour concrete in center of panels and spread outwards.
10. Cut back perimeter board to ½" below floating floor curb height and install perimeter caulking (self-leveling, non-hardening, polyethylene or polysulphide base sealant) flush with concrete.

VIBRO-ACOUSTICS®
A Swegon Group company

FLOATING CONCRETE FORMWORK FLOOR SYSTEM
GUIDELINE SPECIFICATION

1.0 GENERAL REQUIREMENTS

1.1 WORK INCLUDED:

1.1.1 Provide labor, materials and equipment necessary for the complete installation of the Floating Concrete Formwork Floor System as shown on contract drawings and detailed herein.

1.2 RELATED WORK (BY OTHERS)

1.2.1 Work related to the installation of the Floating Concrete Formwork Floor System shall include but not be limited to the following:

Caulking :(by others)	Section_____
Concrete and reinforcing :(by others)	Section_____
Floor drains :(by others)	Section_____
Metal pipe and conduit sleeves :(by others)	Section_____
Waterproofing :(by others)	Section_____

1.3 THE SYSTEM:

1.3.1 The Floating Concrete Formwork Floor System to incorporate engineered isolation pads, fiberglass perimeter isolation board, and plywood formwork placed on top of the isolation pads, junction connection plates, and polyethylene sheeting for temporary waterproofing placed over plywood formwork, low density fiberglass, junction plates, and perimeter isolation material.

1.4 QUALITY ASSURANCE:

1.4.1. Retain the services of a qualified professional engineer to design the floating floor system.

1.4.2. The Floating Concrete Formwork Floor System shall he furnished by a proven supplier with not less than 5 years experience in similar specialized systems. Single source responsibility is required to ensure continuity and quality. The supplier shall be responsible to provide the engineered design, supply the materials, and execute the installation. In addition, the supplier is to co-ordinate with other trades to ensure that their work has been conducted in accordance with the supplier's recommendations when this work impacts the Floating Concrete Formwork Floor System.

1.4.3 Documents for approval:
The supplier shall submit shop drawings showing isolator placement for Architects approval prior to commencing work.
- "quality certificate" showing material compliance with resonant frequency
- "quality certificate" showing material compliance with static and dynamic load requirements
- "quality certificate" of the isolation material covering the project load requirements
- Reference list of worldwide projects over at least 25 years

2.0 PRODUCT / SYSTEM

2.1 APPROVED SUPPLIER

2.1.1. All products and materials for work as described in 1.3.1 shall he supplied and installed by Vibro-Acoustics as represented by:

2.2 MATERIALS

2.2.1 Isolation Pads: as distributed by Vibro-Acoustics.
Isolation pads shall be nominal 2" thick. Isolation placement to be engineered by supplier but not to exceed 24" centers. The dynamic resonant frequency of the isolation pads shall not exceed 14Hz at the operating deflection.

2.2.2. Formwork: The concrete pouring forms shall be **3/4**" thick exterior grade plywood. Metal junction plates are to he used to connect and hold in place the formwork to receive the concrete pour.

2.2.3. Perimeter Board: Perimeter isolation shall be 1" thick rigid fiberglass board placed between the formwork panels and side walls or vertical surfaces and all penetrations.

2.2.4 Junction plates: plates are to be made of galvanized steel and fastened to formwork to maintain proper alignment until concrete is in place.

2.2.5 Low Density Acoustic Media: to be placed in the air gap between formwork and structural slab

2.2.6. Waterproofing polyethylene sheet: temporary waterproofing sheet shall be minimum 6 mil polyethylene

3.0 EXECUTION

3.1 INSTALLATION

3.1.1. The installation and related work by others shall be in accordance with instructions offered by the system supplier, and approved by the architect.

3.1.2. Installation
- Perimeter isolation board installed
- Isolators and formwork put in place in accordance with the approved drawings
- install junction plates to ensure formwork remains in place
- Temporary waterproofing polyethylene sheet installed
- Prior to concrete pour (by others) inspect and report for correction any deficiencies which may prove detrimental to the performance of the floating floor system
- supervise the concrete pour (concrete by others) to ensure the formwork or any other component of the floating floor system is not disturbed.
- Once the concrete has cured, the perimeter caulking may be installed
- Once completed a "certificate of compliance of installation" is to be submitted.

3.2 FIELD QUALITY ASSURANCE

3.2.1 Any conditions which may prove detrimental to the performance of the floating concrete formwork floor system shall be reported and corrected prior to installation of the system.

3.2.2 Prior to the start of work by this section inspect the substrate surfaces including but not limited to the waterproofing membrane. Report any conditions which may be considered detrimental to the performance of the Floating Concrete Formwork Floor System.

3.2.2 After the concrete formwork has been installed by this section, inspect the installations conducted by other trades: including (but not limited to floor drains, floor penetrations (conduits, piping, ductwork, etc.) that they are installed in accordance with recommendations of the supplier of the Floating Concrete Formwork Floor System and report any deficiencies considered detrimental prior to the concrete pour.

3.2.3 Supervise the pouring of the concrete to ensure that the formwork is not disturbed in any way that may he detrimental to the performance of the Floating Concrete Formwork Floor System.

3.2.4 Upon completion submit a signed certificate that the Floating Concrete Formwork Floor System has been properly installed

FLOATING FLOORS JACK-UP

VIBRO-ACOUSTICS®
A Swegon Group company

MEMBER VISCMA

tel: 416-291-7371 1-800-565-8401
fax: 416-291-8049 1-888-811-2264

web: www.vibro-acoustics.com
eml: info@vibro-acoustics.com

4AN 60TM Jack-Up Floating Floor Isolation Element

4AN 60TM

File No.: DS-4AN60TM-JU-001 Date: 13 Nov 2013
Supersedes: New Date: New

4AN 60TM

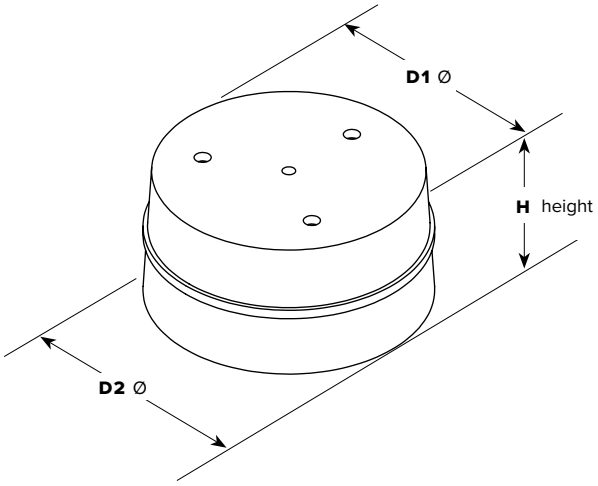

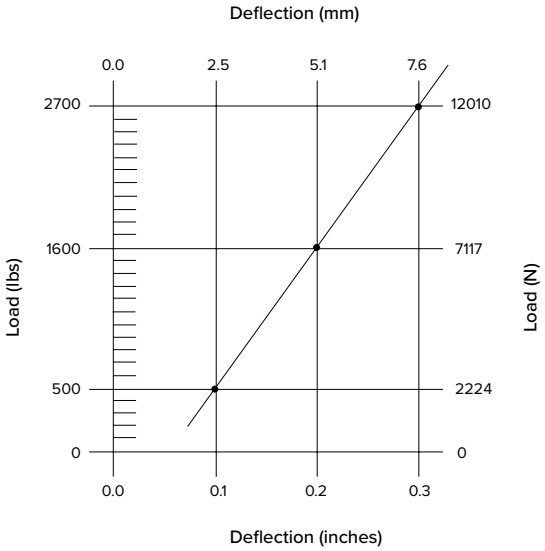

DIMENSIONS

Model	D1 Ø		D2 Ø		H	
	in	mm	**in**	mm	**in**	mm
4AN 60TM	**4**	102	**4 1/4**	108	**2 1/8**	54

NOTES

- 60 durometer AASHTO neoprene isolation element
- Nominal design load = 1600 lbs (7117 N)
- Nominal design deflection = 0.2 in (5 mm)

Meets AASHTO Specifications				
ASTM Test #	**Property**	**Units**	**Spec**	**Result**
D2240	hardness	Shore "A"	60+/–5	pass
D412	tensile	psi	2500 min	pass
D412	elongation	%	350 min	pass
D573	heat age 70 hrs @100 C	change -hard.(pts) - tensile (%) - elong (%)	+15 –15 –40	pass
D395B	compression set	%	35 max	pass
D471	#3 oil swell	%	100	pass
D572	oxygen bomb 48 hrs @ 70 C, 300 psi retention - tensile % - elongation %	 % %	 75 75	pass
D1171	ozone resist 168 hrs @ 40C @ 50 pphm		no cracks	pass
D2137	cold temp	deg. C	–40	pass
D257	volume resistivity	Ω/cm	na	1.2″ × 10″ static conductive

Project:			COMMENTS:
Customer:			
Consultant:			
Dwg No.:	Rev:	Drawn by:	
V-A Project Manager:			
TAG:			DATE:

VIBRO-ACOUSTICS®
A Swegon Group company

MEMBER VISCMA

tel: 416-291-7371 1-800-565-8401
fax: 416-291-8049 1-888-811-2264
web: www.vibro-acoustics.com
eml: info@vibro-acoustics.com

Jack-Up Floating Floors
Installation Instructions

FF-JU

File No.: INS-FF-JU-001 Date: 21 Aug 2013
Supersedes: New Date: New

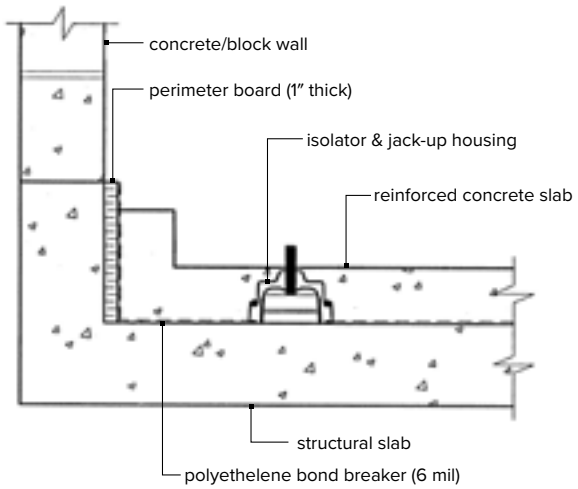

Figure 1 – Phase 1 Unraised

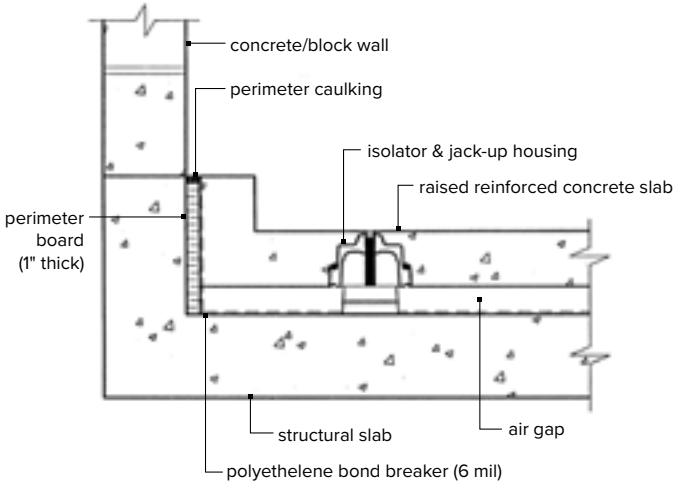

Figure 2 – Phase 2 Raised

INSTRUCTIONS

Phase 1

1. Ensure that the structural slab is free of equipment and debris and that it is swept clean.
2. Cut and install 1" perimeter isolation boards around all perimeter side walls, curbs and columns. Height to be at least 1" above raised finished floating floor curb height (3" above poured floor height).
3. All penetrations (piping, conduit and ductwork) passing through the floating floor must be isolated with perimeter isolation boards (see item #2), pre-compressed molded fiberglass sleeves, or metal sleeves packed with 1.5 lb. density insulation.
4. Install 2 layers of 6-mil polyethylene bond breaker. Overlap sheets 6" and extend up and over perimeter board by 8". Tape all seams to ensure watertight joints. Stagger the joints between the first and second layers. Staggered joints are best achieved by crossing the first layer with the second layer (i.e. first layer laid east-west; second layer laid north-south)
5. Position the neoprene isolators and jack-up housings as shown on the approved layout drawing. Make sure that the neoprene isolators are installed with the centering dimple facing up.
6. Install the reinforcing steel. Note that the maximum steel rod diameter to properly nest into the isolator housing chairs is 10 mm (3/8").
7. At this time a final inspection of the installation is required before pouring the concrete. The inspection should include the following items:
    a. Inspection for proper installation items 2 through 6
    b. Measurement verification of isolator locations including
    c. Modifications to the drawing to indicate the "as installed" situation
    d. Inspect each isolator housing to verify that it contains a neoprene isolator and that the isolator is right side up.
    e. Insert a red plastic cap into each isolator to prevent concrete from filling and flooding the housing. At this time the concrete can be poured. [**Tip**: Add petroleum jelly to cap to aid in locating after concrete pour]
8. Pour the concrete. When finishing concrete you must be sure to expose the red caps. This will greatly assist in the task of locating them later when it comes time to jack the floor up.

Phase 2: After the concrete has set

1. Ensure that the structural slab is free of equipment and debris and that it is swept clean.
2. When the concrete has cured, remove the red plastic caps and install the ¾-10 set screws at each isolator. Take care when removing the red plastic caps not to allow debris to enter the housing. If possible, vacuum the threaded hole prior to installing the setscrew. If the setscrew won't turn by hand (or with only a little force using an Allen key) then you may clean the threads out with a tap first. The setscrew should be turned down until it reaches the top of the neoprene isolator.
3. The floating slab is to be jacked-up 2 inches. In addition, the isolators will deflect approximately 1/4" to 3/8". The net result will be about 2 1/4" – 2 3/8" of travel of the setscrew into the jack mount. This will equate to approximately 24 full turns at each isolator.
4. Starting at one corner, systematically jack each isolator until reaching the last isolator. Turn the T-bar wrench 4 full turns to pre-load the isolators. No movement of the floor is likely during this initial stage.
5. Repeat the systematic jacking of each isolator with 2 full turns each pass. A total of approximately 12 passes will raise the floor the required 2". When the floor has been leveled, grout each hole.
6. Cut back the surplus perimeter board, clean away the resulting debris, and caulk as specified.

VIBRO-ACOUSTICS®
A Swegon Group company

FLOATING CONCRETE JACK-UP FLOOR SYSTEM
GUIDELINE SPECIFICATION

1.0 GENERAL REQUIREMENTS

1.1 WORK INCLUDED

1.1.1. Provide labour, materials and equipment necessary for the complete installation of the FLOATING CONCRETE JACK-UP FLOOR SYSTEM as per drawings and specifications.

1.2 RELATED WORK (BY OTHERS)

1.2.1 Work related to the installation of the FLOATING CONCRETE JACK-UP FLOOR SYSTEM shall include but not be limited to the following:

Caulking (by others)	Section_____
Concrete and reinforcing (by others)	Section_____
Floor drains (by others)	Section_____
Metal pipe and conduit sleeves (by others)	Section _____
Waterproofing (by others)	Section _____

1.3 THE SYSTEM

1.3.1. The FLOATING CONCRETE JACK-UP FLOOR SYSTEM shall incorporate engineered isolators contained within a housing complete with jack-up bolt, perimeter isolation, 2 layers of bond breaker, reinforced concrete and perimeter caulking.

1.4 QUALITY ASSURANCE

1.4.1. Retain the services of a qualified professional engineer to design the floating floor system.

1.4.2. The FLOATING CONCRETE JACK-UP FLOOR SYSTEM to be by a proven supplier with not less than 5 years experience in similar specialized systems. Single source responsibility of the JACK-UP FLOOR SYSTEM is required to ensure continuity and quality of installation. The supplier or their representative shall be responsible to furnish the engineered design, supply the materials and execute the installation. In addition, the supplier is to co-ordinate with other trades that their work has been conducted in accordance with the supplier's recommendations when this work impacts the JACK-UP FLOATING FLOOR SYSTEM.

1.4.3. Documents for approval:
The supplier shall submit shop drawings showing isolator placement for the Architects approval prior to commencement of work.
Also to be submitted upon request:
- "quality certificate" showing material compliance with resonant frequency requirements.
- "quality certificate" showing material compliance with static and dynamic load requirements.
- "quality certificate" of the isolation material covering the project load requirements.
- reference list of worldwide projects over a 25 year period.

2.0 PRODUCT/SYSTEM

2.1 APPROVED SUPPLIER

2.1.1. All products and materials for work in this Section shall be supplied by Vibro-Acoustics as represented by:

2.2 MATERIALS

2.2.1. Isolation pads: as distributed by Vibro-Acoustics
Isolation pads shall be nominally 2" thick. Isolation placement to be engineered by supplier, but not exceed 48" on center.
The dynamic resonant frequency of the isolation pads shall not exceed 14 Hz at the operating deflection.

2.2.2. Jack-up housing to be complete with lift bolt used to rain the floating slab. Temporary cap to prevent concrete seepage during pour will be supplied.
Jack-up housing will be designed to incorporate the use of reinforcing bars as recommended by the structural engineer.

2.2.3. Perimeter Board: Perimeter isolation shall be 1" thick rigid fiberglass board placed on side walls and vertical surfaces to prevent contact with building structure.

2.2.4. Perimeter Sealant: An acoustical sealant as recommended by the floating concrete floor supplier to be supplied and installed by this Section.

3.0 EXECUTION

3.1 INSTALLATION

3.1.1. The installation of the Floating Concrete JACK-UP Floor System and materials directly relating to the system will follow the approved procedures of the system supplier and as approved by the architect:

3.1.2. Before placement of the isolators, as per approved shop drawings, two layers of 6 mil polyethylene shall be installed over the entire surface receiving the floating concrete slab. Two layers will be used to ensure bonding between the floating slab and the structural slab does not occur.

3.1.3. Reinforcing bars for the floating concrete slab shall be placed and fastened to the housing in accordance with directions from a Structural Engineer.

3.1.4. After installation of the perimeter isolation and isolator assemblies, the concrete may be poured and must be allowed to cure.

3.1.5. The lifting bolts are turned in sequence, as per supplier's instructions, until the floor slab reaches the designed height.

3.1.6. Bolt holes shall be grouted.

3.1.7. Perimeter and all penetrations shall be caulked.

3.2 FIELD QUALITY CONTROL

3.2.1. Prior to the start of work by this Section inspect the surfaces which are to receive the floating floor system. Report any conditions which may be considered detrimental to the performance of the Floating Concrete Floor System.

3.2.2. After the isolator assemblies have been installed by this Section, inspect the installations conducted by other trades: including (but not limited to) floor drains, floor penetrations (conduits, piping, ductwork etc.) to ensure installation is in accordance with recommendations of the supplier of the Floating Concrete Floor system. Report any deficiencies for correction.

3.2.3. Supervise the pouring of the concrete to ensure that the isolator assemblies have not been disturbed in any way that may be detrimental to the performance of the Floating Concrete Floor System.

3.2.4. On completion submit a signed certificate that the Floating Concrete Floor System has been properly installed.

VIBRO-ACOUSTICS®
A Swegon Group company

MEMBER VISCMA

tel: 416-291-7371 1-800-565-8401
fax: 416-291-8049 1-888-811-2264

web: www.vibro-acoustics.com
eml: info@vibro-acoustics.com

Floating Floors
Operation and Maintenance

FF-O&M

File No.: INS-FF-O&M-001 Date: 21 Aug 2013
Supersedes: New Date: New

Operation and Maintenance

Vibro-Acoustics floating floors have no moving parts. Routine maintenance is not required. The perimeter of the floating floor slab and the perimeter of any penetrations should be inspected at least once per year to ensure the caulking at the isolation gap is still continuous. If any deterioration causing through cracking is observed, the caulking should be repaired or replaced as needed. If the floating floor has been structurally damaged, contact your local Vibro-Acoustics Sales Representative or the factory direct at 1-800-565-8401.

VIBRO-ACOUSTICS®
A Swegon Group company

MEMBER VISCMA

tel: 416-291-7371 1-800-565-8401
fax: 416-291-8049 1-888-811-2264

web: www.vibro-acoustics.com
eml: info@vibro-acoustics.com

File No.: WTY-S-001 Date: 22 Apr 2015
Supersedes: New Date: New

Silencer Warranty

Seller warrants to the original purchaser for a period not in excess of 18 months from the date of shipment or 12 months from the date of installation, whichever occurs first, the design (where design is sellers responsibility), construction and materials of sellers products to be free from defects in materials and workmanship. Seller's sole obligation under this warranty is limited to repairing or furnishing without charge any defective parts. Products will be repaired or replaced as necessary and as determined by Vibro-Acoustics. If required, site removal and reinstallation are the responsibility of others. All repairs are F.O.B. point of manufacture.

This warranty does not apply to products subjects to any accident, alteration, abuse or misuse. Seller does not guarantee against abrasion, corrosion or erosion.

The term "Original Purchaser" as used in this warranty shall be deemed to mean that person, firm, association or corporations for whom the products referred to are originally installed.

ACOUSTIC LOUVERS

AL

Acoustic Louver

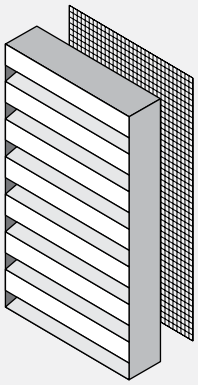

Description

VIBRO-ACOUSTICS' ACOUSTICAL LOUVERS are designed to allow airflow through ventilation openings while reducing the radiation of noise. They use acoustic grade glass fiber as the principle sound-absorbing mechanism. Acoustical splitters, sometimes called vanes or splitter vanes, are used for mid to higher frequency attenuation. Perforated metal protects the glass fiber from erosion by the airflow.

The splitters vary in quantity and thickness, and air passages also vary in width. They are aerodynamically shaped to minimize pressure drop. Lips are designed into the splitters to protect against weather elements.

Applications

> Where there is not enough space to fit in silencers

> In ventilation openings for mechanical rooms, cooling towers, screen walls, enclosures for generators

> In substitution of architectural louvers where aesthetics is not of primary concern (e.g. some Water Treatment and Power Plants)

Features and Benefits

> Available in any cross-sectional dimensions to "fit-the-opening"

> Modular unit sizes to fit openings without using transitions or large blank-off sections

> Standard depth 12 in.; also other depths available

> 1 in. x 1 in. heavy wire mesh birdscreen (usually on inconspicuous side)

> Can be selected to suit the acoustic, space, or energy-cost requirements

> Construction quality and aerodynamic design optimized to give reliable performance, best acoustics, lowest pressure drop and lowest overall cost

Performance Data/Testing

Vibro-Acoustics' 5th generation aero-acoustic laboratory was the first laboratory to be NVLAP accredited (Lab Code 100424-0) for the ASTM E-477 silencer test code. NVLAP is administered by the U.S. Dept. of Commerce.

Acoustic Louver Selection and Location

Vibro-Acoustics' Acoustical Louvers need to be carefully selected to optimize performance. Call **1-800-565-8401** for custom selections by our application engineers.

Standard Construction Features

> Solid galvanized frame

> Aerodynamically shaped galvanized splitters (exposed side: solid; underside: perforated and weather lips built-in both ends)

> Splitters filled with acoustic grade glass fiber under minimum 15% compression

> 1 in. x 1 in. heavy wire mesh birdscreen (usually on inconspicuous side)

Special Construction Options

> Special materials (e.g. stainless steel, aluminum)

> Prime coat paint finish

> Media protection: glass fiber cloth, film liner

> Flanges

> Mullions

> Surface finish option like anodized (aluminum), baked enamel paint etc.

> For details of above and more special options see Special Construction Options.

CERTIFIED PERFORMANCE DATA

VIBRO-ACOUSTICS®
A Swegon Group company

ALA

Acoustic Louver
Airfoil Blade

How to Specify Example:

48 X **60** **ALA-MV** X **12**

Duct Width	Duct Height	Louver Model	Louver Depth

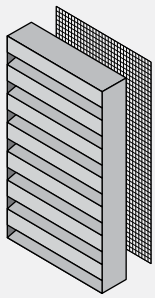

Depth (in.)	Model	Octave Band Transmission Loss (dB)								Free Area (%)	Face Velocity (fpm) Pressure Drop (in.wg)			
		63	125	250	500	1000	2000	4000	8000		350	500	700	1000
6	ALA-MV-6	6	6	7	9	15	15	14	14	19	0.11	0.22	0.44	0.90
	ALA-HV-6	6	4	6	7	13	14	12	13	29	0.07	0.15	0.29	0.59
8	ALA-MV-8	6	6	8	11	15	16	15	15	20	0.10	0.21	0.41	0.84
	ALA-HV-8	5	3	5	8	13	15	14	15	30	0.08	0.17	0.33	0.67
12	ALA-MV-12	9	9	12	14	18	17	16	16	19	0.15	0.30	0.59	1.20
	ALA-HV-12	10	6	10	11	15	16	16	14	29	0.09	0.19	0.37	0.74
18	ALA-MV-18	9	11	14	16	23	21	18	17	20	0.15	0.31	.061	1.24
	ALA-HV-18	8	9	12	13	20	18	16	15	30	0.09	0.18	0.35	0.71
24	ALA-MV-24	10	13	15	21	27	25	18	18	20	0.16	0.33	0.64	1.31
	ALA-HV-24	10	10	13	18	24	22	17	17	30	0.09	0.18	0.35	0.70

Pressure drop may be too high for most practical applications

Acoustical Performance

Transmission Loss (TL) determined by ASTM E90. Noise Reduction (NR) may be determined as: NR=TL+6. Insertion Loss (IL) may be estimated using: IL=TL+2 for all bands of interest.

Aerodynamic Performance

Free Area and Pressure Drop determined by AMCA Standard 500-L for free inlet and outlet under ideal conditions. System effects due to ducted conditions, low height, or obstructions may increase pressure drop by a factor of 1.5 or higher.

Dimensions

Maximum single piece size: 60” x 120”; larger louver sizes will be multiple pieces. Minimum height: 12”. Louver with less than 30” high, will require assistance with product selection to minimize risk of higher pressure drop values.

Available Options

- Bird screen: 1” x 1” heavy wire mesh
- Surface preparation and finishing:
  - Mill finish
  - Prime coat
  - Satin coat/galvaneal
  - Baked enamel
  - Anodized (aluminum only)
  - Other finishes available
- Aluminum or Stainless steel
- Media protection:
  - Vibar™
  - Fiberglass oath
- Custom louver shapes and design for special applications

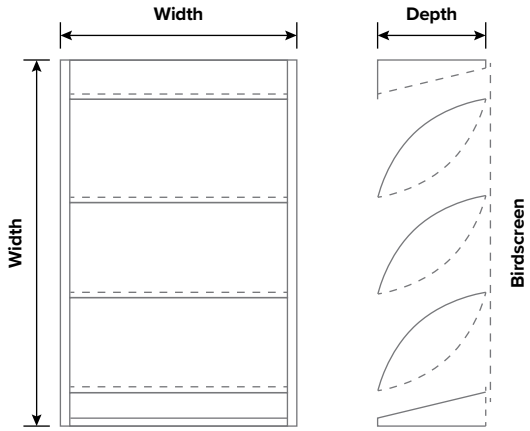

CERTIFIED PERFORMANCE DATA

VIBRO-ACOUSTICS®
A Swegon Group company

ALF

Acoustic Louver
Flat Blade

How to Specify Example:

48 X **60** **ALF-MV** X **12**

Duct Width	Duct Height	Louver Model	Louver Depth

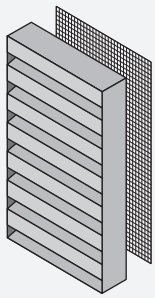

Depth (in.)	Model	Octave Band Transmission Loss (dB)								Free Area (%)	Face Velocity (fpm) Pressure Drop (in.wg)			
		63	125	250	500	1000	2000	4000	8000		150	250	350	500
4	ALF-LV-4	4	7	6	9	13	14	14	12	17	0.06	0.17	0.33	0.67
	ALF-MV-4	4	6	6	8	10	12	11	10	25	0.03	0.09	0.18	0.36
6	ALF-LV-6	6	9	9	13	17	17	17	15	17	0.06	0.18	0.35	0.71
	ALF-MV-6	6	7	8	8	15	16	14	14	24	0.03	0.09	0.18	0.37
8	ALF-LV-8	7	10	11	16	20	19	18	17	18	0.07	0.18	0.36	0.73
	ALF-MV-8	6	7	8	10	17	18	17	17	28	0.03	0.09	0.17	0.35
12	ALF-LV-12	8	12	17	22	24	24	19	20	19	0.07	0.20	0.38	0.78
	ALF-MV-12	9	9	12	16	18	19	19	18	26	0.04	0.12	0.24	0.49
18	ALF-LV-18	11	14	17	23	26	25	21	20	16	0.08	0.21	0.42	0.86
	ALF-MV-18	10	12	15	20	22	22	20	18	22	0.05	0.14	0.27	0.56

Pressure drop may be too high for most practical applications

Acoustical Performance

Transmission Loss (TL) determined by ASTM E90. Noise Reduction (NR) may be determined as: NR=TL+6. Insertion Loss (IL) may be estimated using: IL=TL+2 for all bands of interest.

Aerodynamic Performance

Free Area and Pressure Drop determined by AMCA Standard 500-L for free inlet and outlet under ideal conditions. System effects due to ducted conditions, low height, or obstructions may increase pressure drop by a factor of 1.5 or higher.

Dimensions

Maximum single piece size: 60” x 120”; larger louver sizes will be multiple pieces. Minimum height: 12”. Louver with less than 30” high, will require assistance with product selection to minimize risk of higher pressure drop values.

Available Options

- Bird screen: 1” x 1” heavy wire mesh
- Surface preparation and finishing:
  - Mill finish
  - Prime coat
  - Satin coat/galvaneal
  - Baked enamel
  - Anodized (aluminum only)
  - Other finishes available
- Aluminum or Stainless steel
- Media protection:
  - Tedlar
  - Fiberglass oath
- Custom louver shapes and design for special applications

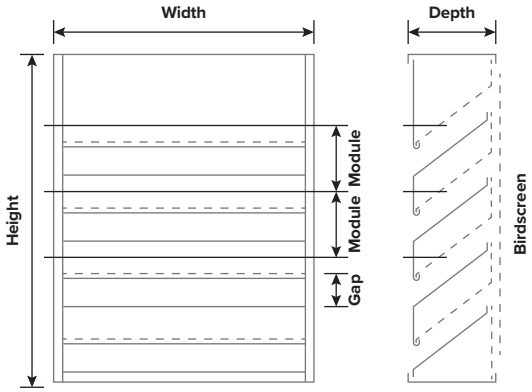

CERTIFIED PERFORMANCE DATA

VIBRO-ACOUSTICS®
A Swegon Group company

ALV

Acoustic Louver
V Blade

How to Specify Example:

48 X **60** **ALV-MV** X **12**

Duct Width	Duct Height	Louver Model	Louver Depth

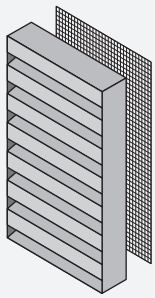

Depth (in.)	Model	Octave Band Transmission Loss (dB)								Free Area (%)	Face Velocity (fpm) Pressure Drop (in.wg)			
		63	125	250	500	1000	2000	4000	8000		150	250	350	500
6	ALV-LV-6	6	8	9	12	17	20	21	20	18	0.10	0.27	0.53	1.08
	ALV-MV-6	6	6	8	10	15	19	19	19	26	0.07	0.18	0.36	0.73
8	ALV-LV-8	7	9	10	13	17	21	20	20	19	0.10	0.28	0.54	1.10
	ALV-MV-8	6	6	7	10	15	20	19	20	28	0.06	0.18	0.35	0.71
12	ALV-LV-12	6	10	12	16	23	26	20	22	21	0.09	0.24	0.47	0.97
	ALV-MV-12	7	7	10	13	20	21	20	20	30	0.06	0.17	0.33	0.67
18	ALV-LV-18	10	12	16	21	28	27	25	24	19	0.10	0.27	0.52	1.06
	ALV-MV-18	9	10	14	18	25	24	23	22	28	0.07	0.19	0.37	0.76
24	ALV-LV-24	11	16	17	25	31	29	26	24	19	0.11	0.30	0.59	1.21
	ALV-MV-24	11	13	15	22	28	26	25	23	26	0.08	0.22	0.43	0.88

Pressure drop may be too high for most practical applications

Acoustical Performance

Transmission Loss (TL) determined by ASTM E90. Noise Reduction (NR) may be determined as: NR=TL+6. Insertion Loss (IL) may be estimated using: IL=TL+2 for all bands of interest.

Aerodynamic Performance

Free Area and Pressure Drop determined by AMCA Standard 500-L for free inlet and outlet under ideal conditions. System effects due to ducted conditions, low height, or obstructions may increase pressure drop by a factor of 1.5 or higher.

Dimensions

Maximum single piece size: 60” x 120”; larger louver sizes will be multiple pieces. Minimum height: 12”. Louver with less than 30” high, will require assistance with product selection to minimize risk of higher pressure drop values.

Available Options

- Bird screen: 1” x 1” heavy wire mesh
- Surface preparation and finishing:
  - Mill finish
  - Prime coat
  - Satin coat/galvaneal
  - Baked enamel
  - Anodized (aluminum only)
  - Other finishes available
- Aluminum or Stainless steel
- Media protection:
  - Tedlar
  - Fiberglass oath
- Custom louver shapes and design for special applications

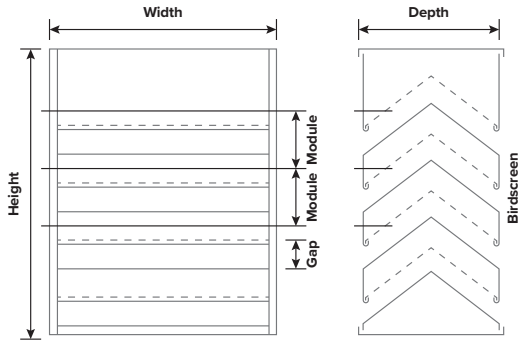

VIBRO-ACOUSTICS®
A Swegon Group company

GUIDELINE MASTER
ACOUSTICAL LOUVER SPECIFICATIONS

[INSERT THIS SECTION IN* PART 2 – PRODUCTS *OF THE APPROPRIATE SECTION WITHIN* DIVISION 15, MECHANICAL SYSTEMS*]

2.XX ACOUSTICAL LOUVERS

[Use the one of the following two paragraphs.]

2.XX.1 Louver frame shall be constructed with 16 gauge (1.63 mm) minimum **[galvanized steel // stainless steel]**. Louver blades shall be **[flat // herringbone // airfoil]** configuration and made of 18 gauge (1.24 mm) minimum solid **[galvanized steel // stainless steel]**, and 22 gauge (0.81 mm) minimum perforated **[galvanized steel // stainless steel]**.

2.XX.1 Louver frame shall be constructed with 14 gauge (1.63 mm) minimum aluminum. Louver blades shall be **[flat // herringbone // airfoil]** configuration and made of 16 gauge (1.29 mm) minimum solid aluminum, and 20 gauge (0.81 mm) minimum perforated aluminum or expanded metal.

[Use the one of the following two paragraphs.]

2.XX.2 Acoustical fill shall Mol**dB**lock Media™ insulation containing natural cotton fibers treated with a borate solution to actively inhibit the growth of mold, bacteria and fungi. Media shall not contain any formaldehydes or VOC's. Media shall be 100% recyclable. Media shall comply with UL181 and NFPA 90A. Glass fiber, fiberglass and rockwool will not be permitted as substitutes for Mol**dB**lock Media™ insulation.

2.XX.2 Acoustical fill shall be bacteria and fungus resistant, shot-free glass fiber insulation. Glass fiber density and compression shall be as required to insure conformance with laboratory test data.

2.XX.3 Acoustical media shall be encapsulated with **[fiberglass cloth** // **non-woven fabric // Tedlar] [as indicated on the drawings]** to minimize erosion and impregnation of the glass fiber. **[The fabric shall be fire retardant, complying with NFPA 90A and shall also be treated with a fungal inhibitor and water repellant finish.]**

[Anodized finish is for aluminum louvers only. Other finishes are available.]

2.XX.4 Louvers shall be **[supplied with a standard mill finish // supplied with a prime coat for field painting onsite by others // finished with a satin coat / galvaneal material for painting onsite by others // supplied with a baked enamel finish; color as directed by the Architect // anodized; clear or color as directed by the Architect]**.

2.XX.5 Louver acoustical and aerodynamic performance shall be as indicated on the schedule.

2.XX.5 Louver acoustical performance shall be determined per ASTM E90-02. Louver aerodynamic performance shall be determined per AMCA Standard 500-L-99. Manufacturer shall submit certified data substantiating both the specified acoustic and aerodynamic performance.

2.XX.6 Acceptable manufacturers: Vibro-Acoustics (basis of design).

NC-CAT-001

NOISE CONTROL

VIBRO-ACOUSTICS®
A Swegon Group company