SILENCER SHEETS INDUSTRIAL NOISE CONTROL

VIBRO-ACOUSTICS®
A Swegon Group company

RED-SB

Rectangular
Elbow Dissipative
Side Box Centrifual
Fan Silencer

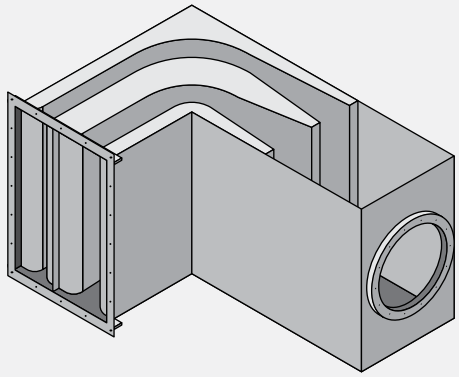

Description

THE VIBRO-ACOUSTICS RED-SB silencer is a 2-stage silencer system using aerodynamically designed rectangular baffles for optimal attenuation, followed by a plenum space providing air diffusion immediately upstream from the fan. The RED-SB is typically bolted directly to the fan's flange, which eliminates problematic noise flanking caused by flexible connections. The silencer should be isolated in the same manner as the fan system.

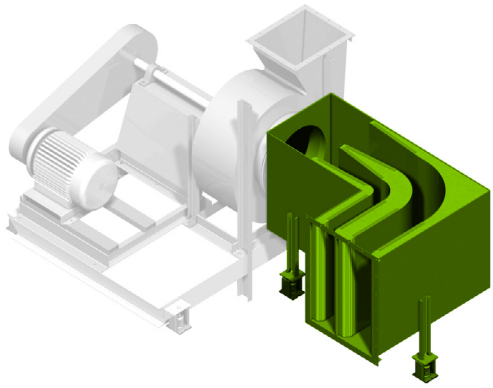

Standard Features

> HRS casing with external prime painting and continuously welded seams

> External gauges compatible with fan construction

> Inlet and outlet flanges with customer specified hole pattern

> Connection to either round or rectangular fan inlet

> 16 ga. galvanized perforated internal liner

> Internal stiffeners

> Acoustic grade fibrous media fill under minimum 15% compression with fiberglass cloth protection

> 1 in. x 1 in. x 16 ga. galvanized birdscreen inlet protection

> Support legs to match fan inlet centerline height

Accessories

> Rain hoods

> Inlet filter housings

> Additional duct transitions or offset pieces

> Bolt and gasket kits

> Flow measurement probes

Options

> Special painting systems

> Corrosive resistant coatings

> Z-Configurations (double elbow)

> Support brackets

> Access panel

> Drainage connection

> Removable birdscreen

> All galvanized or stainless steel construction materials

> Custom designs and configurations for special space and performance requirements